A2	88	E10	001	0

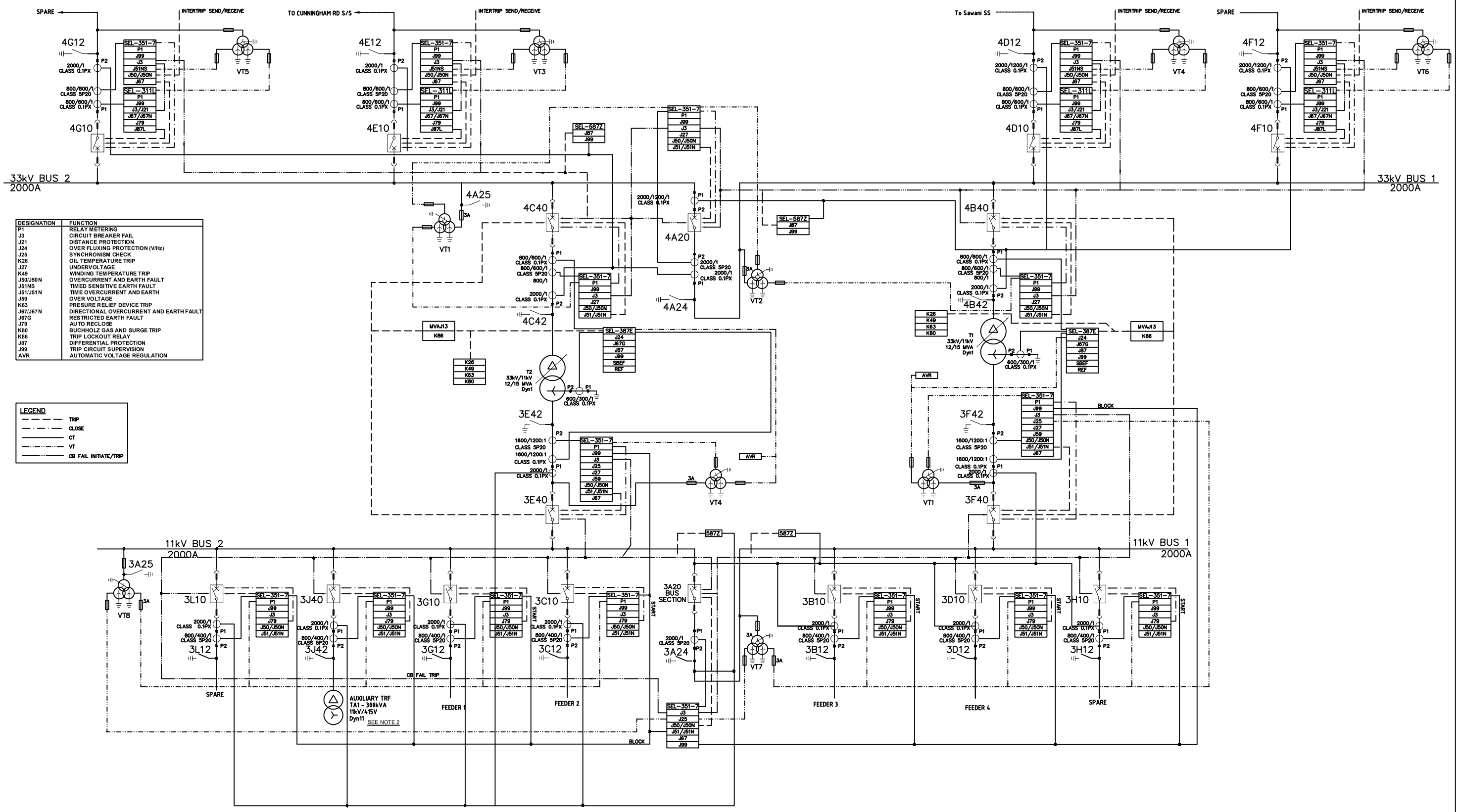

DESIGNATION	FUNCTION
P1	RELAY METERING
J3	CIRCUIT BREAKER FAIL
J21	DISTANCE PROTECTION
J24	OVER FLUXING PROTECTION (V/Hz)
J25	SYNCHRONISM CHECK
K26	OIL TEMPERATURE TRIP
J27	UNDERVOLTAGE
K49	WINDING TEMPERATURE TRIP
J50/J50N	OVERCURRENT AND EARTH FAULT
J51NS	TIMED SENSITIVE EARTH FAULT
J51/J51N	TIME OVERCURRENT AND EARTH
J59	OVER VOLTAGE
K63	PRESSURE RELIEF DEVICE TRIP
J67/J67N	DIRECTIONAL OVERCURRENT AND EARTH FAULT
J67G	RESTRICTED EARTH FAULT
J79	AUTO RECLOSE
K80	BUCHHOLZ GAS AND SURGE TRIP
K86	TRIP LOCKOUT RELAY
J87	DIFFERENTIAL PROTECTION
J99	TRIP CIRCUIT SUPERVISION
AVR	AUTOMATIC VOLTAGE REGULATION

LEGEND

- TRIP
- CLOSE
- CT
- VT
- CB FAIL INITIATE/TRIP

No.	REVISION	DATE	BY	CHK	PSD	APP	REFERENCE	DRAWING No.	TITLE
0.	ISSUED FOR TENDER PURPOSE ONLY	06/05/25						A2-88-E10-SK01	PROP. NEW 33/11kV KTFZ SUBSTATION

DESIGN	T.MOHAMMED	05/05/25
DRAWN	S.NAND	06/05/25
CHECKED		
QA CHECK		
APPROVED	NAOMI BALECA	

ENERGY FIJI LIMITED

PROPOSED 33/11kV
KTFZ SUBSTATION
PROTECTION SLD

DRAWING NUMBER: A2 88 E10 001 0

SCALE: NTS