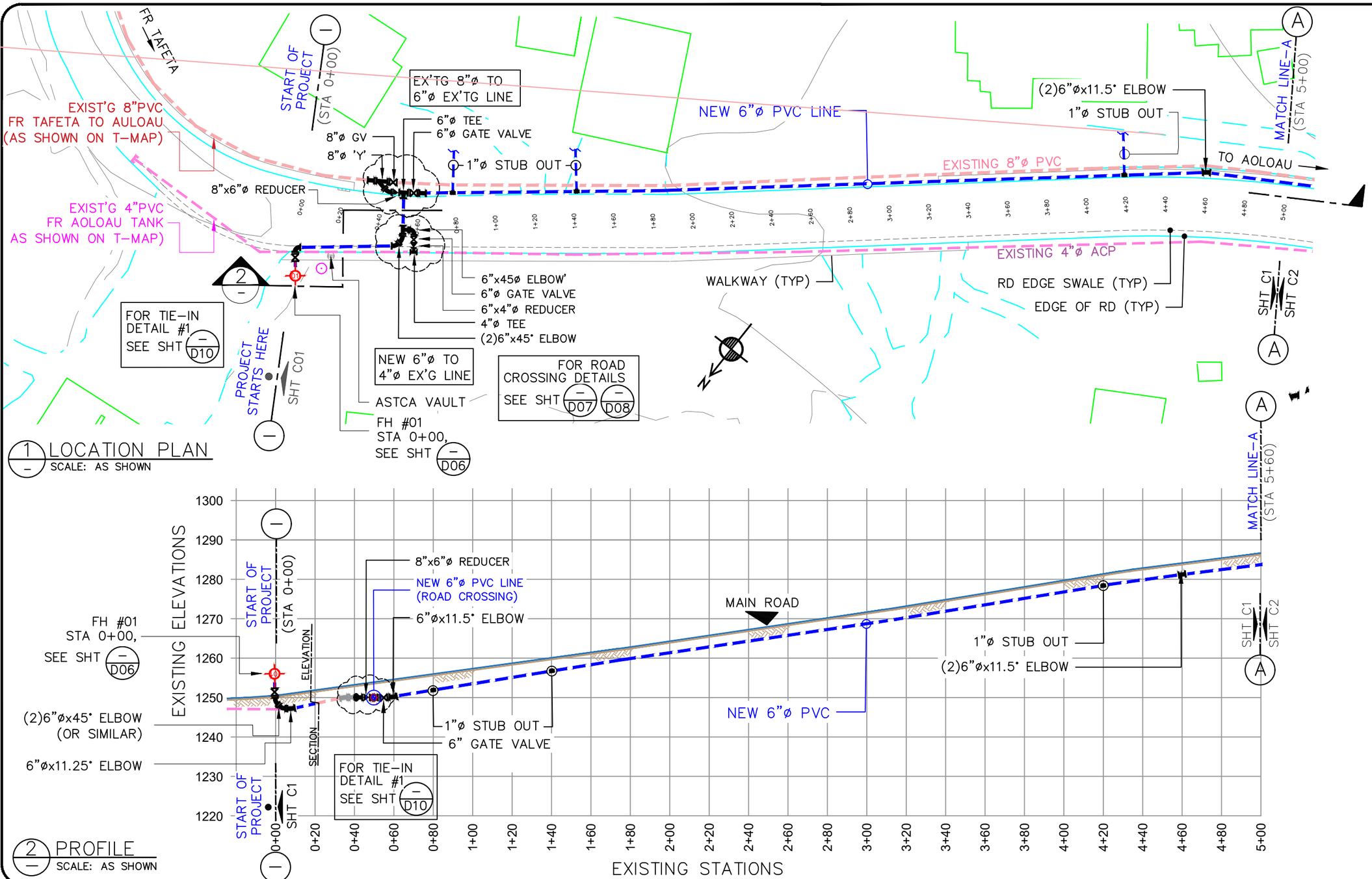

1 LOCATION PLAN
SCALE: AS SHOWN

2 PROFILE
SCALE: AS SHOWN

LEGEND:
- EXISTING ACP WATER LINE:
- NEW 16"ø PVC:
- SEWER SERVICE LINE:
- EXISTING MAIN SEWER LINE:
- EXISTING STORM DRAIN:
- TELEPHONE CONDUIT:
- ELBOWS: 11.25°= 22.5°= 45°=
- FIRE HYDRANT: EXISTING NEW
- POWER/TEL POLE: TELEPHONE POLE ELECTRICITY POLE ALL IN 1 POLE
- TREES: HEDGES:
- SERVICE METER:
- GATE VALVE:
- STUB-OUT:
- AIR RELIEVE VALVE:
- BAC-T SAMPLING STN:
- PRV / PSV :
- ROADS: DIRT ROADS:

GENERAL NOTE:
- CONSTRUCTION CONTRACTOR SHALL FIELD VERIFY ALL EXISTING UNDERGROUND INFRASTRUCTURE TO ENSURE SAFETY OF ITS WORKERS.
- AVOID ANY DAMAGES TO EXISTING GOVERNMENT UTILITIES.
- INSTALL 16"øX16"øX6:ø SADDLE FOR FIRE HYDRANT CONNECTION. (OR SIMILAR CONNECTION)
- INSTALL 2"øx16"ø SADDLE OR SIMILAR CONNECTION FOR NEW SERVICE CONNECTION @ EVERY 500 FEET.

0
SCALE IN FEET
HORIZ. 1": 20'
0 40' 80'
SCALE IN FEET
VERT. 1": 20'

No.	Description	Date

REV. NO.:
REVISION:
CHECKED BY:
APPROVED BY:
DATE:

PREPARED BY: FToala
CHECKED BY: LTyrell
APPROVED BY: FAguila / LTyrell
ISSUE FOR: Construction

AMERICAN SAMOA POWER AUTHORITY
ENGINEERING SERVICES DIVISION
P.O.BOX PPB, TAFUNA, PAGO PAGO, AS 96799

PROJECT NAME: AOLOAU 6"Ø WATERLINE REPLACEMENT PROJECT
DRAWING TITLE: START OF SEGMENT 1 PROFILE & PLAN (STA. 0+00 to 5+00)
PROJECT LOCATION: AOLOAU VILLAGE, AMERICAN SAMOA

SCALE: AS SHOWN
PROJECT NO: 1958785
DATE: APRIL 2023

SIGNATURE:
DATE:
SHEET NO. C01

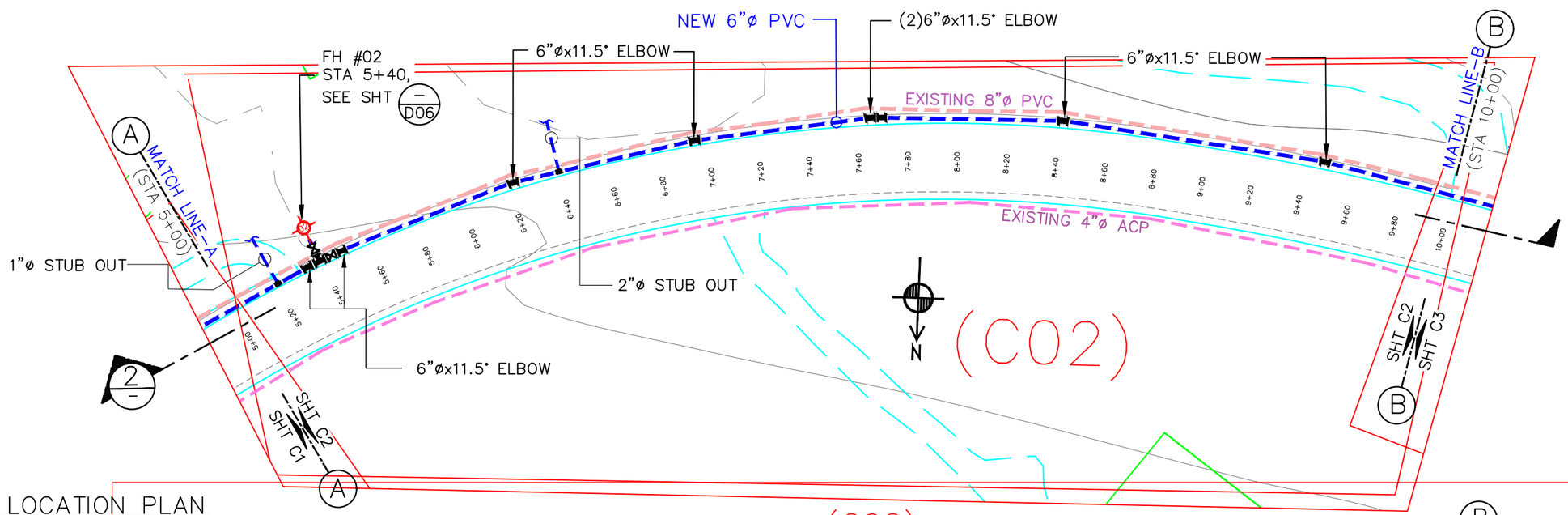

1 LOCATION PLAN
SCALE: AS SHOWN

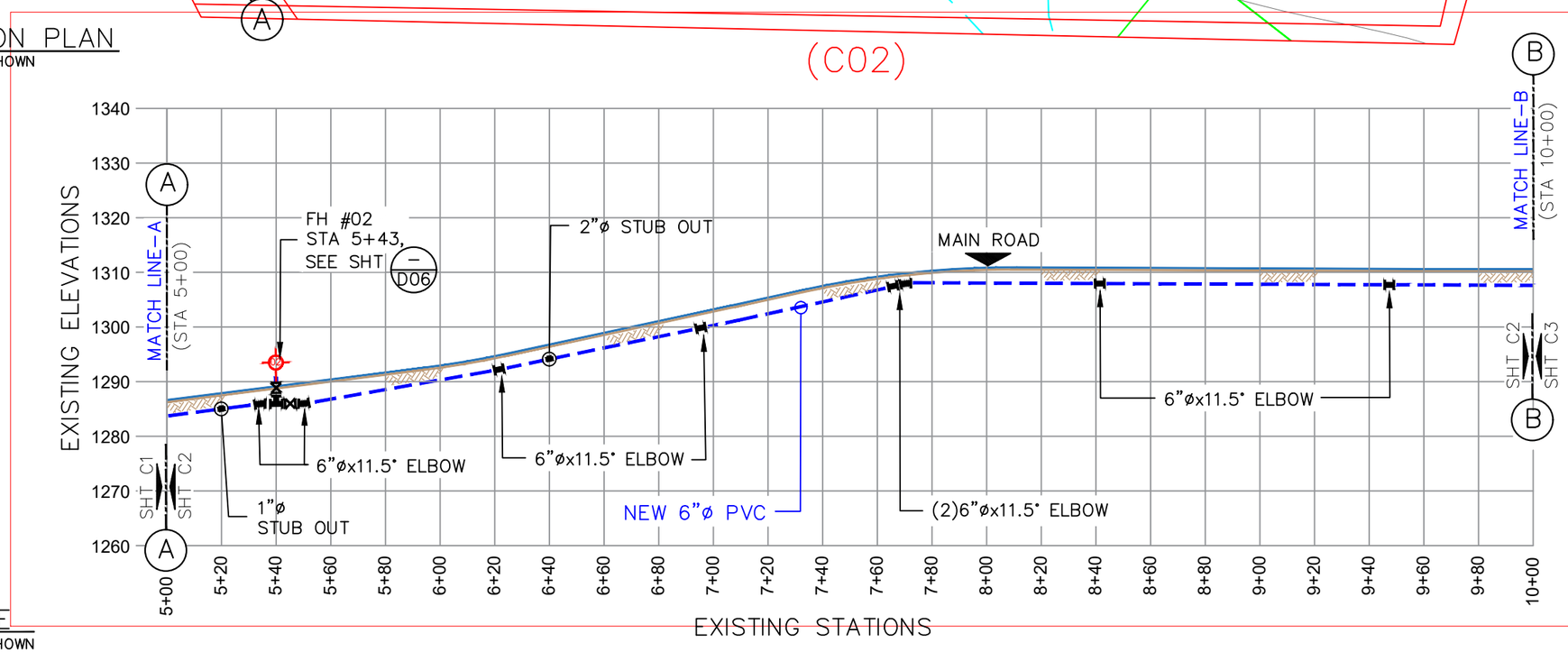

2 PROFILE
SCALE: AS SHOWN

LEGEND:
- EXISTING ACP WATER LINE:
- NEW 16"ø PVC:
- SEWER SERVICE LINE:
- EXISTING MAIN SEWER LINE:
- EXISTING STORM DRAIN:
- TELEPHONE CONDUIT:
- ELBOWS: 11.25°= 22.5°= 45°=
- FIRE HYDRANT: EXISTING NEW
- POWER/TEL POLE: TELEPHONE POLE, ELECTRICITY POLE, ALL IN 1 POLE
- TREES: HEDGES:
- SERVICE METER:
- GATE VALVE:
- STUB-OUT:
- AIR RELIEVE VALVE:
- BAC-T SAMPLING STN:
- PRV / PSV :
- ROADS: DIRT ROADS:

GENERAL NOTE:
- CONSTRUCTION CONTRACTOR SHALL FIELD VERIFY ALL EXISTING UNDERGROUND INFRASTRUCTURE TO ENSURE SAFETY OF ITS WORKERS.
- AVOID ANY DAMAGES TO EXISTING GOVERNMENT UTILITIES.
- INSTALL 16"øX16"øX6:ø SADDLE FOR FIRE HYDRANT CONNECTION. (OR SIMILAR CONNECTION)
- INSTALL 2"øx16"ø SADDLE OR SIMILAR CONNECTION FOR NEW SERVICE CONNECTION @ EVERY 500 FEET.

0
SCALE IN FEET
HORIZ. 1": 20'
0 40' 80'
SCALE IN FEET
VERT. 1": 20'

No.	Description	Date

REV. NO.:
REVISION:
CHECKED BY:
APPROVED BY:
DATE:

PREPARED BY: FToala
CHECKED BY: LTyrell
APPROVED BY: FAguila / LTyrell
ISSUE FOR: Construction

ASPA
AMERICAN SAMOA POWER AUTHORITY
ENGINEERING SERVICES DIVISION
P.O.BOX PPB, TAFUNA, PAGO PAGO, AS 96799

PROJECT NAME: AOLOAU 6"Ø WATERLINE REPLACEMENT PROJECT
DRAWING TITLE: SEGMENT 1 PROFILE & PLAN (STA. 5+00 to 10+00)
PROJECT LOCATION: AOLOAU VILLAGE, AMERICAN SAMOA

SCALE: AS SHOWN
PROJECT NO: 1958785
DATE: APRIL 2023

SIGNATURE:
DATE:
SHEET NO. C02

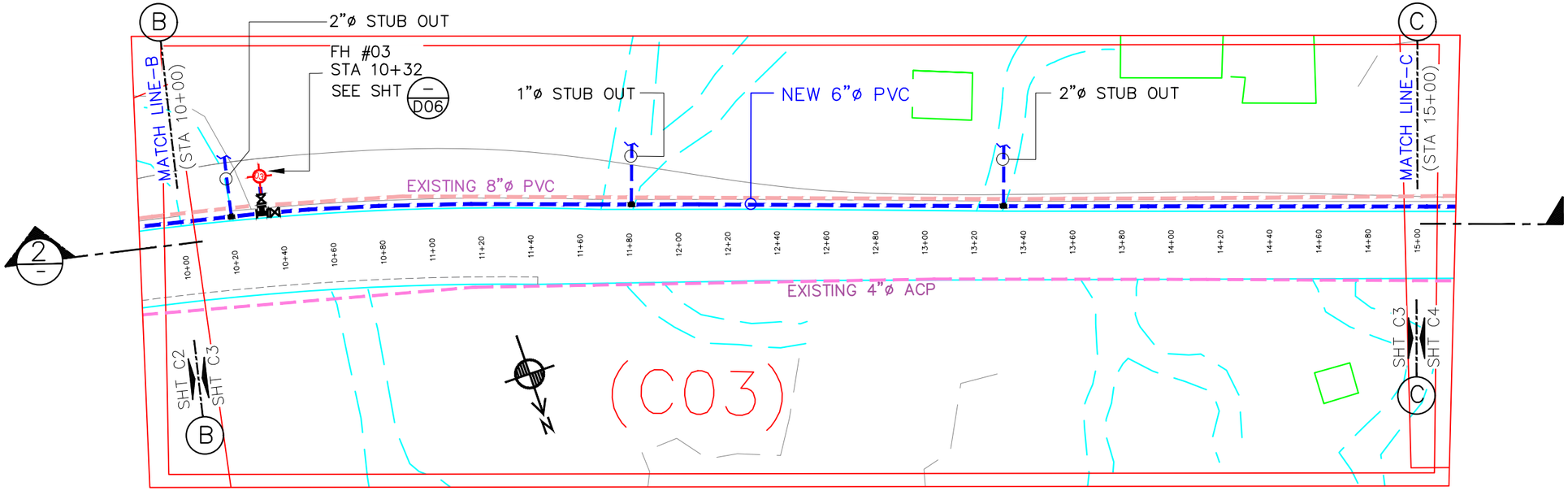

1 LOCATION PLAN
SCALE: AS SHOWN

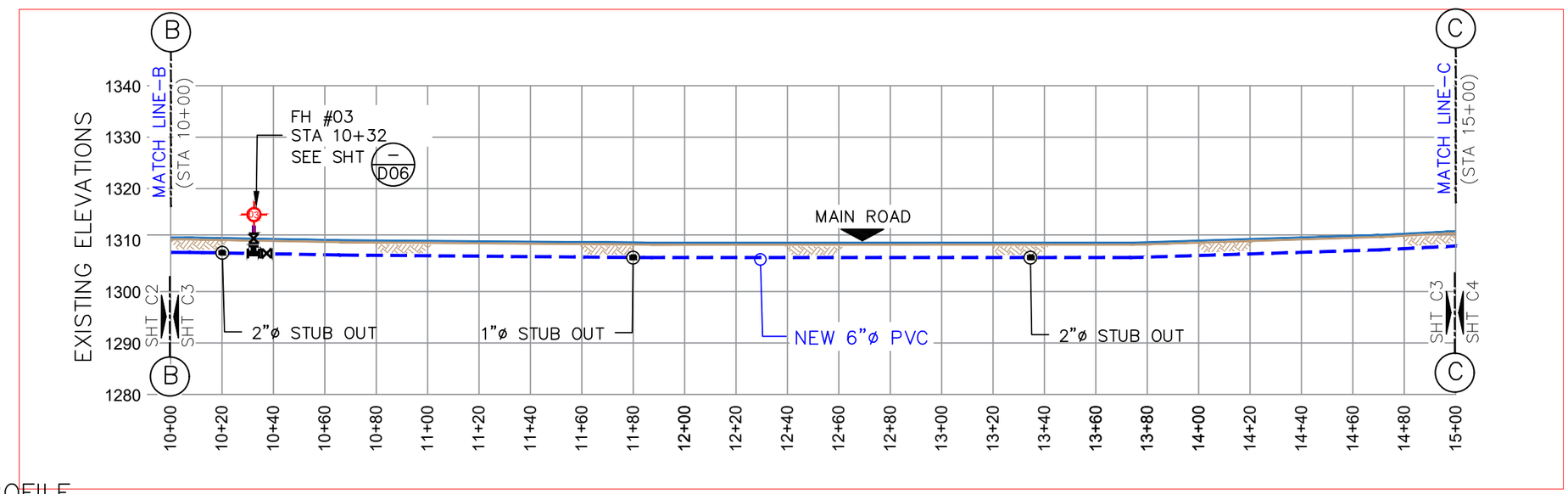

2 PROFILE
SCALE: AS SHOWN

LEGEND:
- EXISTING ACP WATER LINE:
- NEW 16"ø PVC:
- SEWER SERVICE LINE:
- EXISTING MAIN SEWER LINE:
- EXISTING STORM DRAIN:
- TELEPHONE CONDUIT:
- ELBOWS: 11.25°= 22.5°= 45°=
- FIRE HYDRANT: EXISTING NEW
- POWER/TEL POLE: TELEPHONE POLE ELECTRICITY POLE ALL IN 1 POLE
- TREES: HEDGES:
- SERVICE METER:
- GATE VALVE:
- STUB-OUT:
- AIR RELIEVE VALVE:
- BAC-T SAMPLING STN:
- PRV / PSV :
- ROADS: DIRT ROADS:

GENERAL NOTE:

- CONSTRUCTION CONTRACTOR SHALL FIELD VERIFY ALL EXISTING UNDERGROUND INFRASTRUCTURE TO ENSURE SAFETY OF ITS WORKERS.
- AVOID ANY DAMAGES TO EXISTING GOVERNMENT UTILITIES.
- INSTALL 16"øX16"øX6:ø SADDLE FOR FIRE HYDRANT CONNECTION. (OR SIMILAR CONNECTION)
- INSTALL 2"øx16"ø SADDLE OR SIMILAR CONNECTION FOR NEW SERVICE CONNECTION @ EVERY 500 FEET.

0
SCALE IN FEET
HORIZ. 1":20'
0 40' 80'
SCALE IN FEET
VERT. 1":20'

No.	Description	Date

REV. NO.:
REVISION:
CHECKED BY:
APPROVED BY:
DATE:

PREPARED BY: FToala
CHECKED BY: LTyrell
APPROVED BY: FAguila / LTyrell
ISSUE FOR: Construction

ASPA
AMERICAN SAMOA POWER AUTHORITY
ENGINEERING SERVICES DIVISION
P.O.BOX PPB, TAFUNA, PAGO PAGO, AS 96799
AMERICAN SAMOA POWER AUTHORITY

PROJECT NAME: AOLOAU 6"Ø WATERLINE REPLACEMENT PROJECT
DRAWING TITLE: SEGMENT 1 PROFILE & PLAN (STA.10+00 to 15+00)
PROJECT LOCATION: AOLOAU VILLAGE, AMERICAN SAMOA

SCALE: AS SHOWN
PROJECT NO: 1958785
DATE: JULY 2023

SIGNATURE:
DATE:
SHEET NO. C03

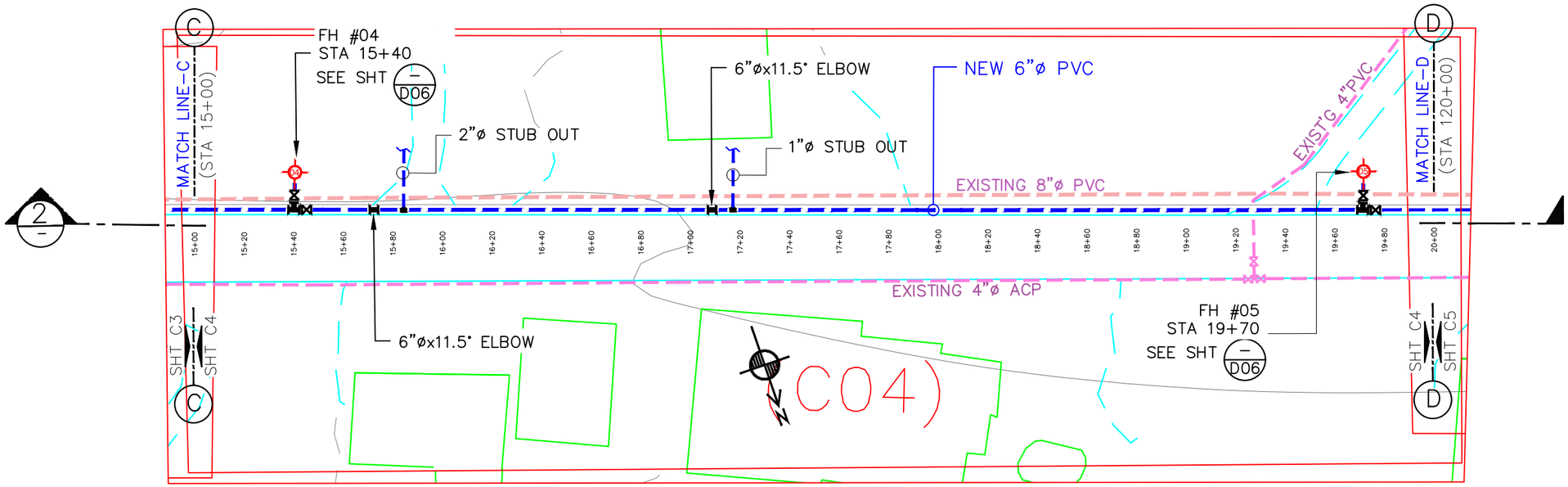

1 LOCATION PLAN
SCALE: AS SHOWN

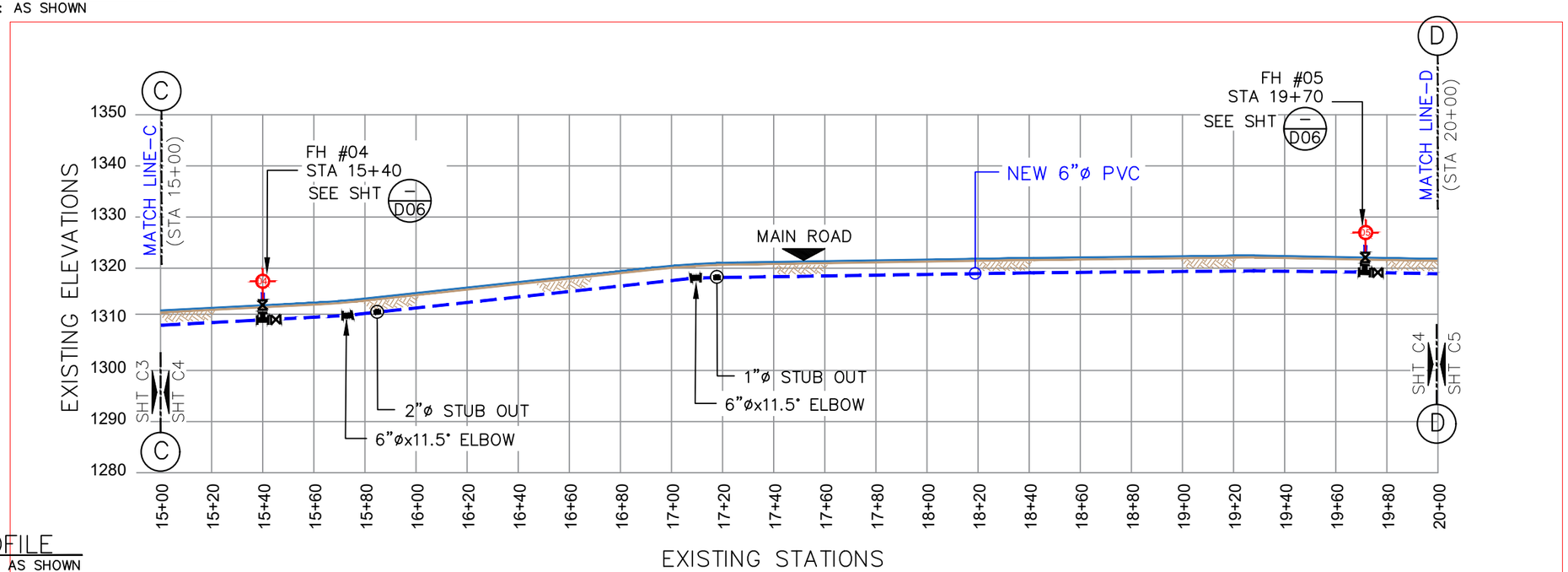

2 PROFILE
SCALE: AS SHOWN

LEGEND:
- EXISTING ACP WATER LINE:
- NEW 16"ø PVC:
- SEWER SERVICE LINE:
- EXISTING MAIN SEWER LINE:
- EXISTING STORM DRAIN:
- TELEPHONE CONDUIT:
- ELBOWS: 11.25°= 22.5°= 45°=
- FIRE HYDRANT: EXISTING NEW
- POWER/TEL POLE: TELEPHONE POLE ELECTRICITY POLE ALL IN 1 POLE
- TREES: HEDGES:
- SERVICE METER:
- GATE VALVE:
- STUB-OUT:
- AIR RELIEVE VALVE:
- BAC-T SAMPLING STN:
- PRV / PSV :
- ROADS: DIRT ROADS:

GENERAL NOTE:

- CONSTRUCTION CONTRACTOR SHALL FIELD VERIFY ALL EXISTING UNDERGROUND INFRASTRUCTURE TO ENSURE SAFETY OF ITS WORKERS.
- AVOID ANY DAMAGES TO EXISTING GOVERNMENT UTILITIES.
- INSTALL 16"øX16"øX6:ø SADDLE FOR FIRE HYDRANT CONNECTION. (OR SIMILAR CONNECTION)
- INSTALL 2"øx16"ø SADDLE OR SIMILAR CONNECTION FOR NEW SERVICE CONNECTION @ EVERY 500 FEET.

0
SCALE IN FEET
HORIZ. 1":20'
0 40' 80'
SCALE IN FEET
VERT. 1":20'

No.	Description	Date

REV. NO.:
REVISION:
CHECKED BY:
APPROVED BY:
DATE:

PREPARED BY: FToala
CHECKED BY: LTyrell
APPROVED BY: FAguila / LTyrell
ISSUE FOR: Construction

AMERICAN SAMOA POWER AUTHORITY
ENGINEERING SERVICES DIVISION
P.O.BOX PPB, TAFUNA, PAGO PAGO, AS 96799

PROJECT NAME: AOLOAU 6"Ø WATERLINE REPLACEMENT PROJECT
DRAWING TITLE: SEGMENT 1 PROFILE & PLAN (STA.15+00 to 20+00)
PROJECT LOCATION: AOLOAU VILLAGE, AMERICAN SAMOA

SCALE: AS SHOWN
PROJECT NO: 1958785
DATE: JULY 2023

SIGNATURE:
DATE:
SHEET NO. C04

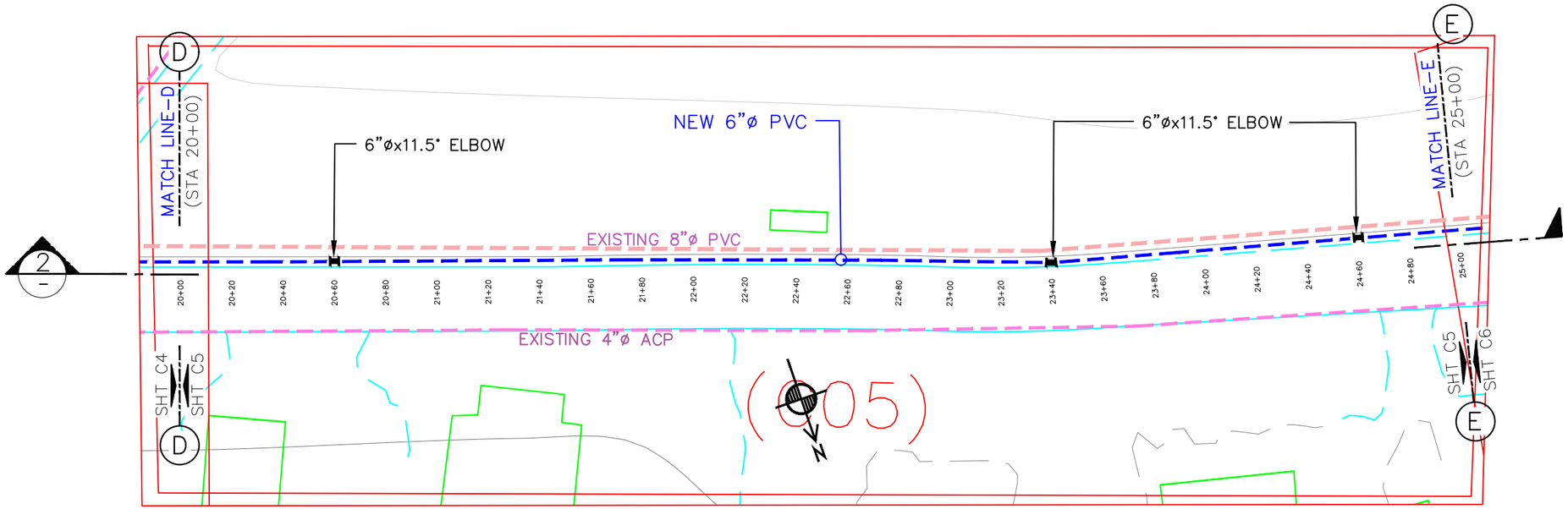

1 LOCATION PLAN
SCALE: AS SHOWN

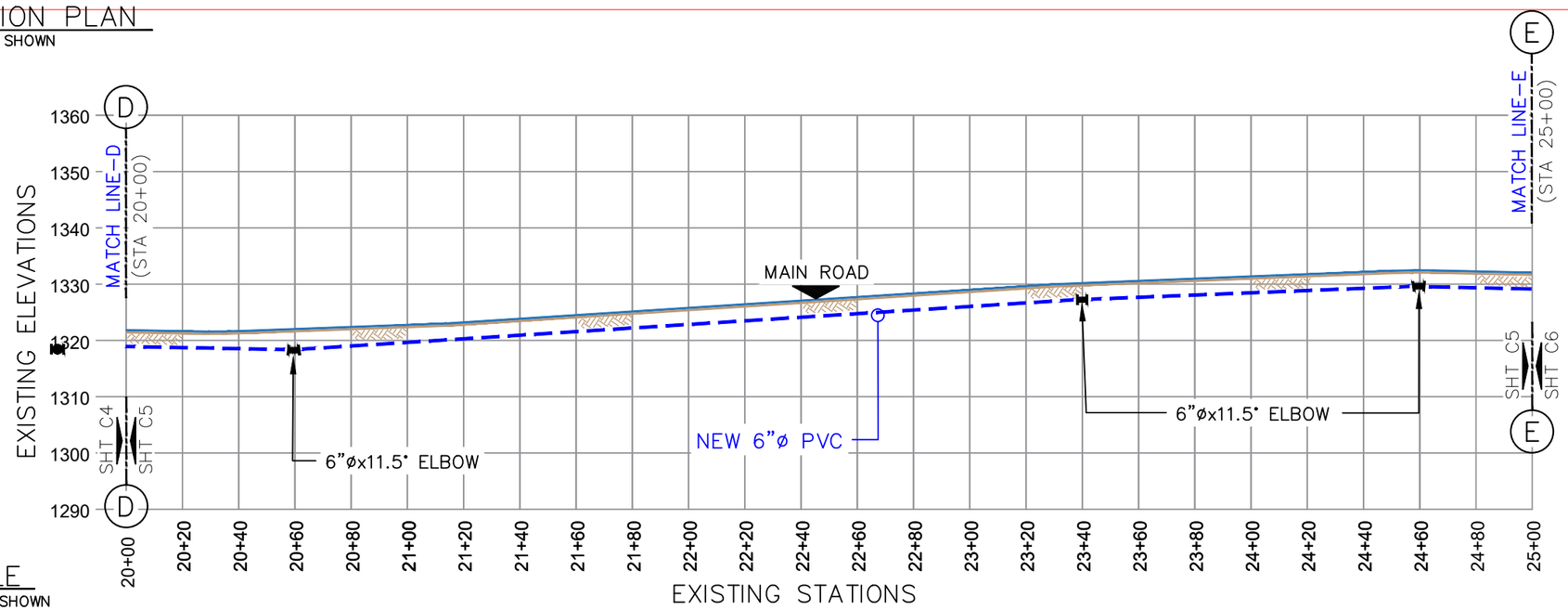

2 PROFILE
SCALE: AS SHOWN

LEGEND:
- EXISTING ACP WATER LINE:
- NEW 16"ø PVC:
- SEWER SERVICE LINE:
- EXISTING MAIN SEWER LINE:
- EXISTING STORM DRAIN:
- TELEPHONE CONDUIT:
- ELBOWS: 11.25°= 22.5°= 45°=
- FIRE HYDRANT: EXISTING NEW
- POWER/TEL POLE: TELEPHONE POLE, ELECTRICITY POLE, ALL IN 1 POLE
- TREES: HEDGES:
- SERVICE METER:
- GATE VALVE:
- STUB-OUT:
- AIR RELIEVE VALVE:
- BAC-T SAMPLING STN:
- PRV / PSV :
- ROADS: DIRT ROADS:

GENERAL NOTE:

- CONSTRUCTION CONTRACTOR SHALL FIELD VERIFY ALL EXISTING UNDERGROUND INFRASTRUCTURE TO ENSURE SAFETY OF ITS WORKERS.
- AVOID ANY DAMAGES TO EXISTING GOVERNMENT UTILITIES.
- INSTALL 16"øX16"øX6:ø SADDLE FOR FIRE HYDRANT CONNECTION. (OR SIMILAR CONNECTION)
- INSTALL 2"øx16"ø SADDLE OR SIMILAR CONNECTION FOR NEW SERVICE CONNECTION @ EVERY 500 FEET.

0
SCALE IN FEET
HORIZ. 1":20'
0 40' 80'
SCALE IN FEET
VERT. 1":20'

No.	Description	Date

REV. NO.:
REVISION:
CHECKED BY:
APPROVED BY:
DATE:

PREPARED BY: FToala
CHECKED BY: LTyrell
APPROVED BY: FAguila / LTyrell
ISSUE FOR: Construction

ASPA
AMERICAN SAMOA POWER AUTHORITY
ENGINEERING SERVICES DIVISION
P.O.BOX PPB, TAFUNA, PAGO PAGO, AS 96799
AMERICAN SAMOA POWER AUTHORITY

PROJECT NAME: AOLOAU 6"Ø WATERLINE REPLACEMENT PROJECT
DRAWING TITLE: SEGMENT 1 PROFILE & PLAN (STA.20+00 to 25+00)
PROJECT LOCATION: AOLOAU VILLAGE, AMERICAN SAMOA

SCALE: AS SHOWN
PROJECT NO: 1958785
DATE: JULY 2023

SIGNATURE:
DATE:
SHEET NO. C05

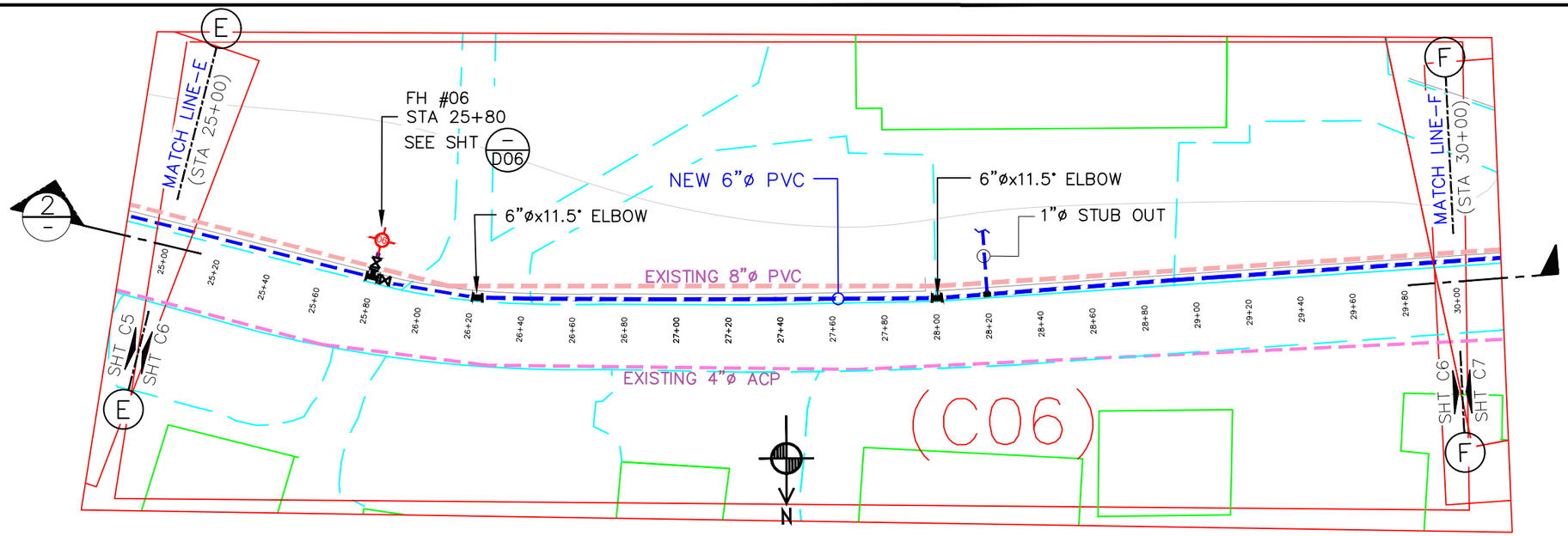

1 LOCATION PLAN
SCALE: AS SHOWN

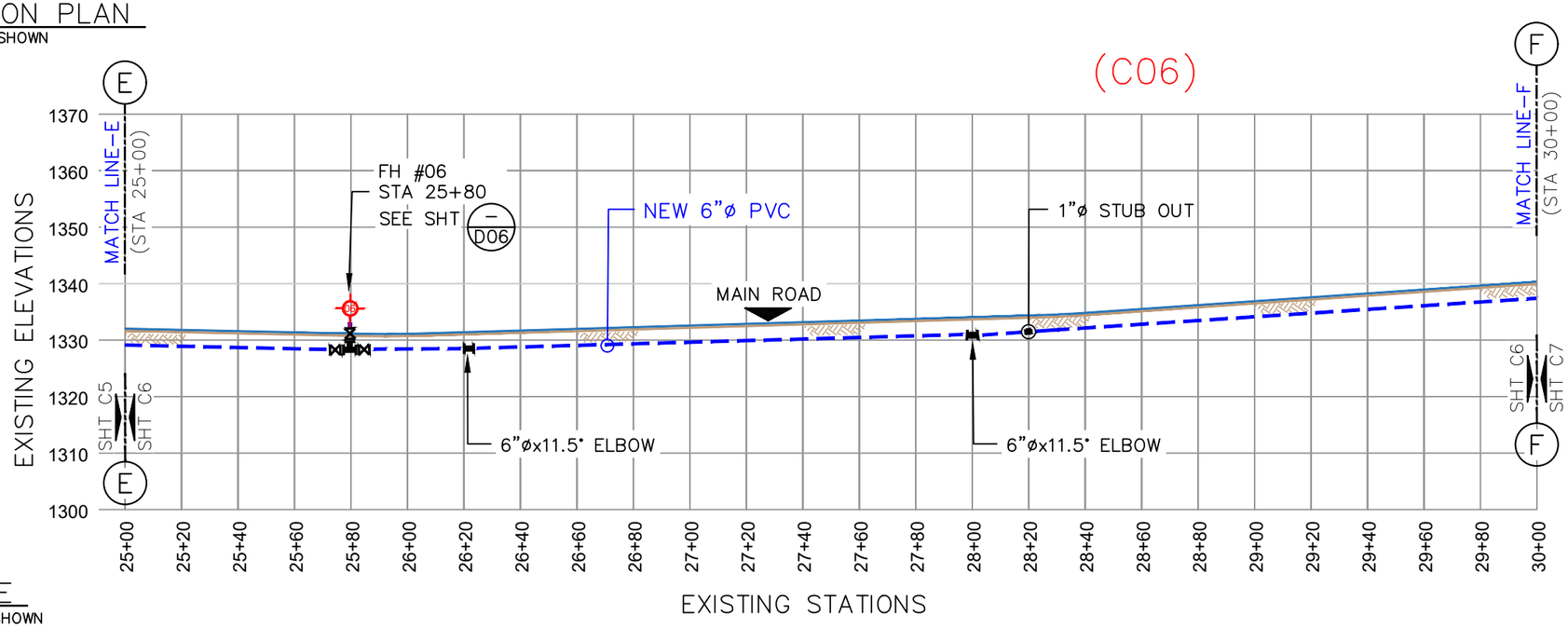

2 PROFILE
SCALE: AS SHOWN

LEGEND:
- EXISTING ACP WATER LINE:
- NEW 16"ø PVC:
- SEWER SERVICE LINE:
- EXISTING MAIN SEWER LINE:
- EXISTING STORM DRAIN:
- TELEPHONE CONDUIT:
- ELBOWS: 11.25°= 22.5°= 45°=
- FIRE HYDRANT: EXISTING NEW
- POWER/TEL POLE: TELEPHONE POLE ELECTRICITY POLE ALL IN 1 POLE
- TREES: HEDGES:
- SERVICE METER:
- GATE VALVE:
- STUB-OUT:
- AIR RELIEVE VALVE:
- BAC-T SAMPLING STN:
- PRV / PSV :
- ROADS: DIRT ROADS:

GENERAL NOTE:

- CONSTRUCTION CONTRACTOR SHALL FIELD VERIFY ALL EXISTING UNDERGROUND INFRASTRUCTURE TO ENSURE SAFETY OF ITS WORKERS.
- AVOID ANY DAMAGES TO EXISTING GOVERNMENT UTILITIES.
- INSTALL 16"ØX16"ØX6:ø SADDLE FOR FIRE HYDRANT CONNECTION. (OR SIMILAR CONNECTION)
- INSTALL 2"øx16"ø SADDLE OR SIMILAR CONNECTION FOR NEW SERVICE CONNECTION @ EVERY 500 FEET.

0
SCALE IN FEET
HORIZ. 1": 20'
0 40' 80'
SCALE IN FEET
VERT. 1": 20'

No.	Description	Date

REV. NO.:
REVISION:
CHECKED BY:
APPROVED BY:
DATE:

PREPARED BY: FToala
CHECKED BY: LTyrell
APPROVED BY: FAguila / LTyrell
ISSUE FOR: Construction

ASPA
AMERICAN SAMOA POWER AUTHORITY

AMERICAN SAMOA POWER AUTHORITY
ENGINEERING SERVICES DIVISION
P.O.BOX PPB, TAFUNA, PAGO PAGO, AS 96799

PROJECT NAME: AOLOAU 6"Ø WATERLINE REPLACEMENT PROJECT
DRAWING TITLE: SEGMENT 1 PROFILE & PLAN (STA.25+00 to 30+00)
PROJECT LOCATION: AOLOAU VILLAGE, AMERICAN SAMOA

SCALE: AS SHOWN
PROJECT NO: 1958785
DATE: JULY 2023

SIGNATURE:
DATE:
SHEET NO. C06

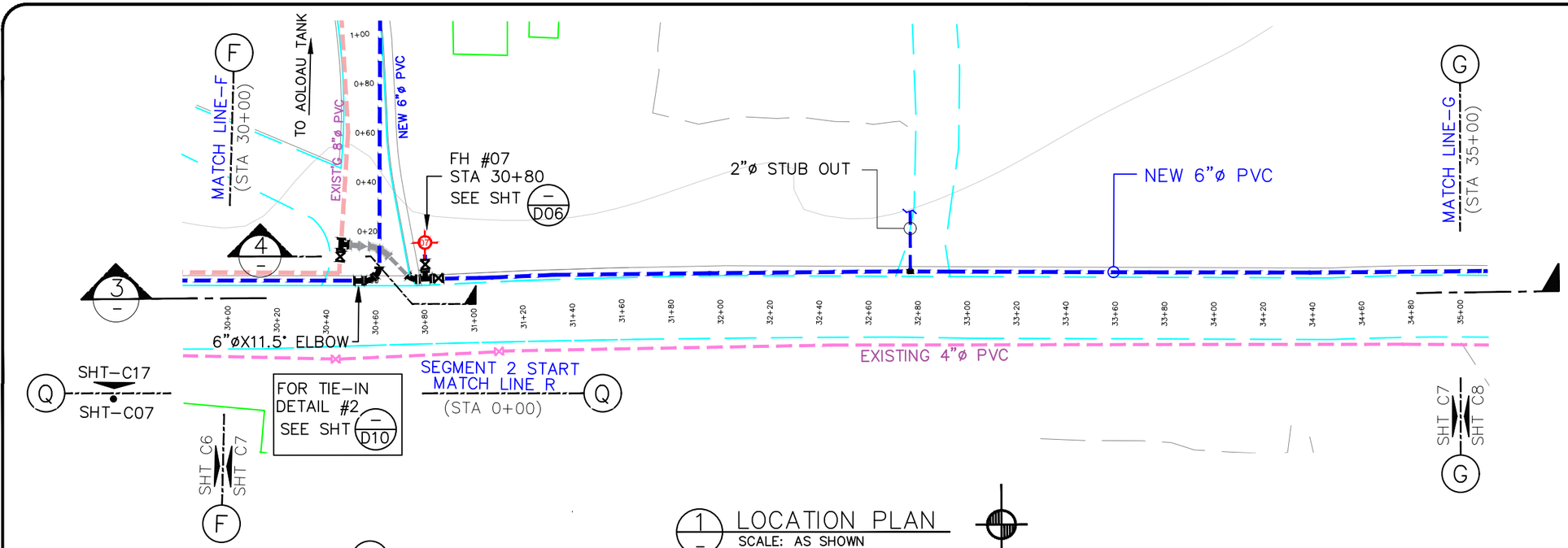

1 LOCATION PLAN
SCALE: AS SHOWN

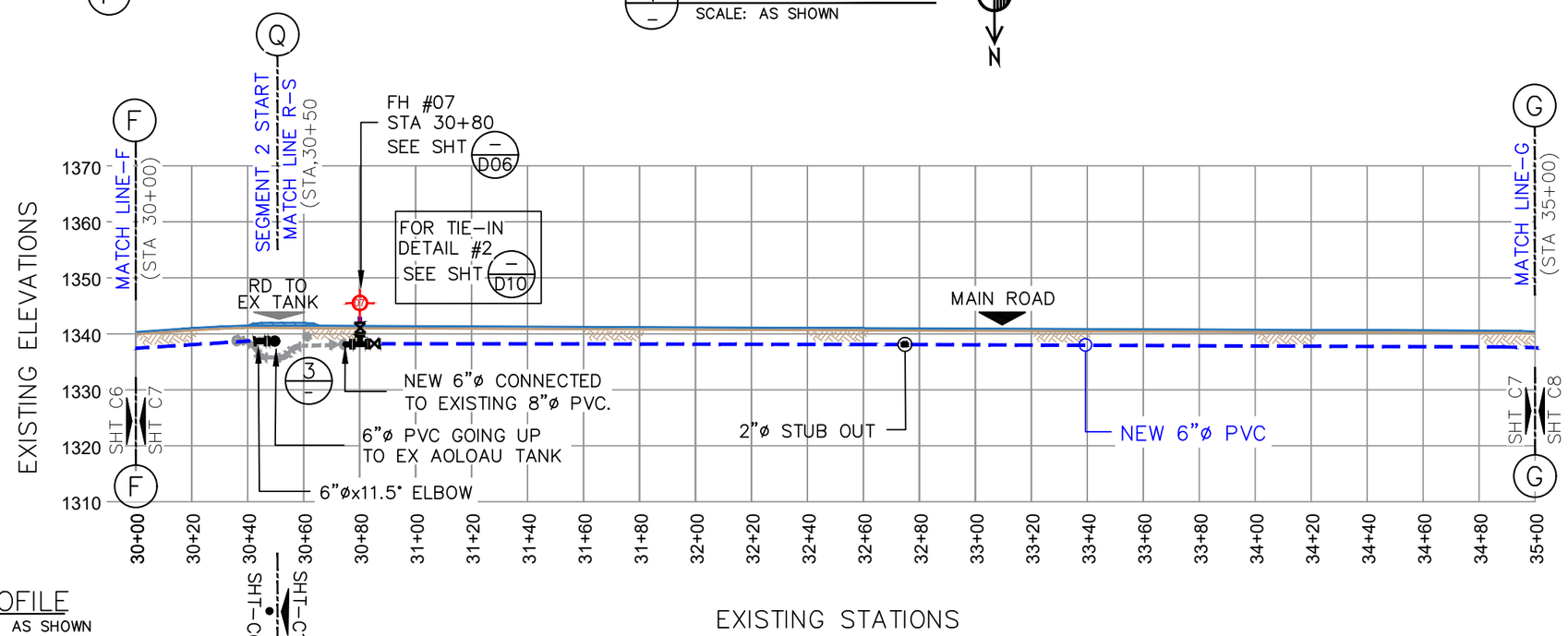

3 PROFILE
SCALE: AS SHOWN

LEGEND:

- EXISTING ACP WATER LINE:
- NEW 16"ø PVC:
- SEWER SERVICE LINE:
- EXISTING MAIN SEWER LINE:
- EXISTING STORM DRAIN:
- TELEPHONE CONDUIT:
- ELBOWS: 11.25°= 22.5°= 45°=
- FIRE HYDRANT: EXISTING NEW
- POWER/TEL POLE: TELEPHONE POLE, ELECTRICITY POLE, ALL IN 1 POLE
- TREES: HEDGES:
- SERVICE METER:
- GATE VALVE:
- STUB-OUT:
- AIR RELIEVE VALVE:
- BAC-T SAMPLING STN:
- PRV / PSV :
- ROADS: DIRT ROADS:

- CONSTRUCTION CONTRACTOR SHALL FIELD VERIFY ALL EXISTING UNDERGROUND INFRASTRUCTURE TO ENSURE SAFETY OF ITS WORKERS.
- AVOID ANY DAMAGES TO EXISTING GOVERNMENT UTILITIES.
- INSTALL 16"øX16"øX6:ø SADDLE FOR FIRE HYDRANT CONNECTION. (OR SIMILAR CONNECTION)
- INSTALL 2"øx16"ø SADDLE OR SIMILAR CONNECTION FOR NEW SERVICE CONNECTION @ EVERY 500 FEET.

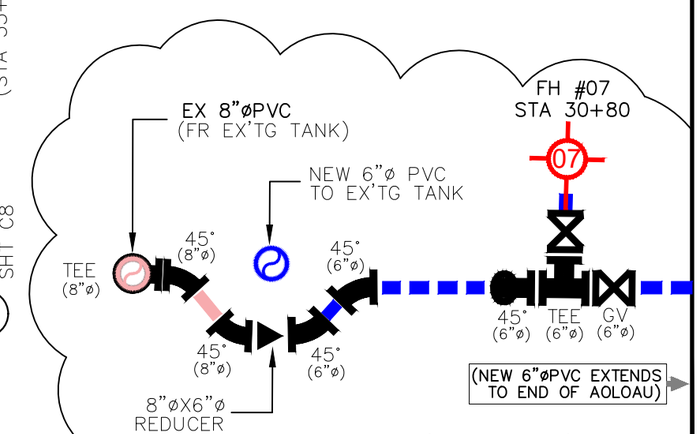

4 DETAILS (OR SIMILAR)
SCALE: AS SHOWN

No.	Description	Date

REV. NO.:
REVISION:
CHECKED BY:
APPROVED BY:
DATE:

PREPARED BY: FToala
CHECKED BY: LTyrell
APPROVED BY: FAguila / LTyrell
ISSUE FOR: Construction

ASPA
AMERICAN SAMOA POWER AUTHORITY

AMERICAN SAMOA POWER AUTHORITY
ENGINEERING SERVICES DIVISION
P.O.BOX PPB, TAFUNA, PAGO PAGO, AS 96799

PROJECT NAME: AOLOAU 6"Ø WATERLINE REPLACEMENT PROJECT
DRAWING TITLE: SEGMENT 1 PROFILE & PLAN (STA.30+00 to 35+00)
PROJECT LOCATION: AOLOAU VILLAGE, AMERICAN SAMOA

SCALE: AS SHOWN
PROJECT NO: 1958785
DATE: JULY 2023

SIGNATURE:
DATE:
SHEET NO. C07

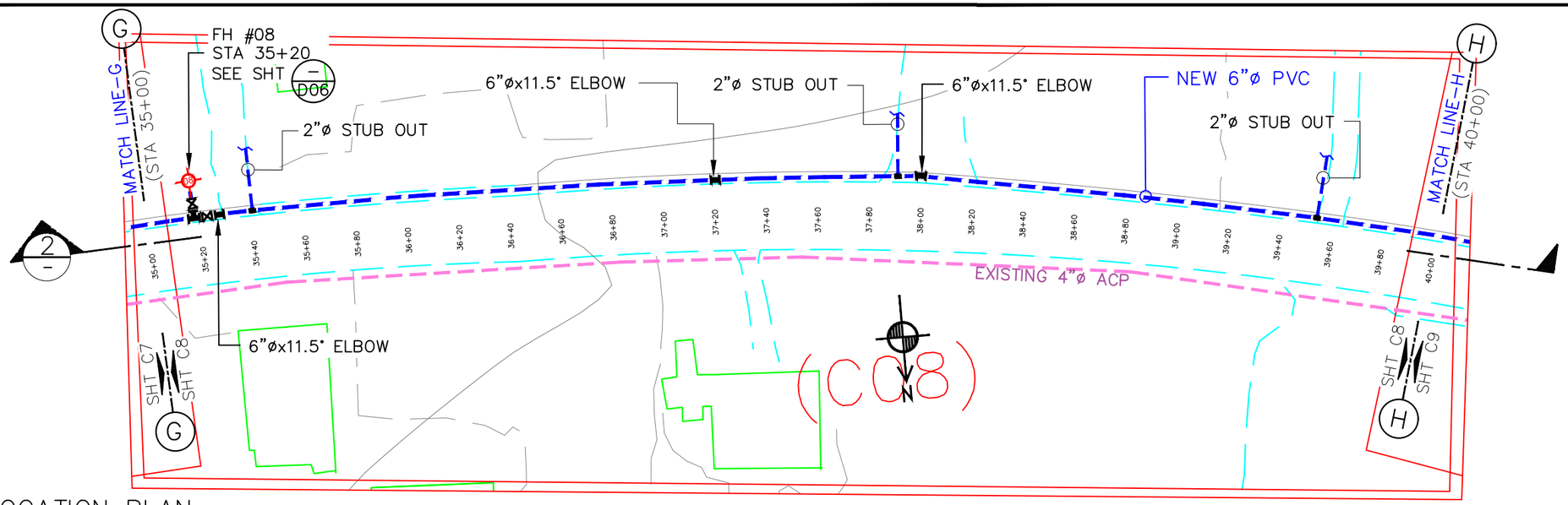

1 LOCATION PLAN
SCALE: AS SHOWN

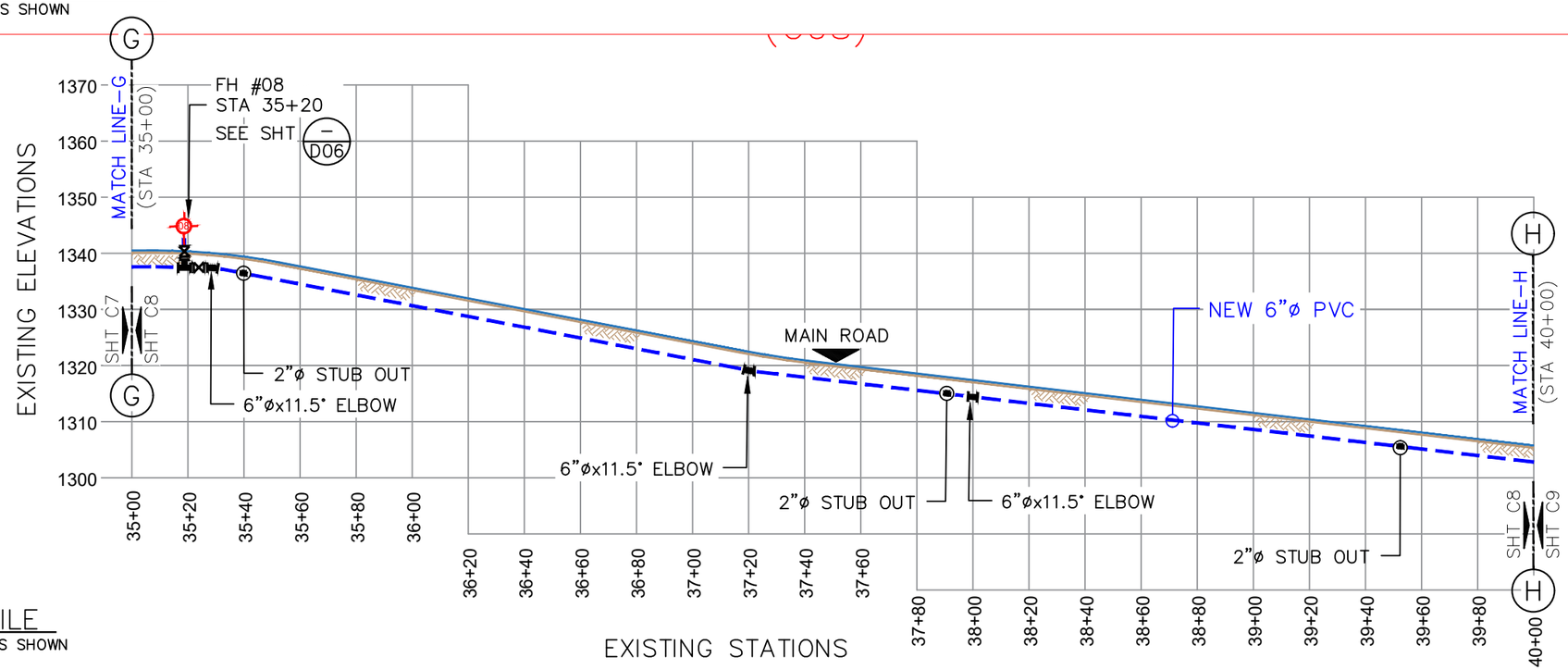

2 PROFILE
SCALE: AS SHOWN

LEGEND:

EXISTING ACP WATER LINE:	
NEW 16"ø PVC:	
SEWER SERVICE LINE:	
EXISTING MAIN SEWER LINE:	
EXISTING STORM DRAIN:	
TELEPHONE CONDUIT:	
ELBOWS:	11.25°= 22.5°= 45°=
FIRE HYDRANT:	EXISTING NEW
POWER/TEL POLE:	TELEPHONE POLE ELECTRICITY POLE ALL IN 1 POLE
TREES:	HEDGES:
SERVICE METER:	
GATE VALVE:	
STUB-OUT:	
AIR RELIEVE VALVE:	
BAC-T SAMPLING STN:	
PRV / PSV :	
ROADS:	DIRT ROADS:

GENERAL NOTE:

- CONSTRUCTION CONTRACTOR SHALL FIELD VERIFY ALL EXISTING UNDERGROUND INFRASTRUCTURE TO ENSURE SAFETY OF ITS WORKERS.
- AVOID ANY DAMAGES TO EXISTING GOVERNMENT UTILITIES.
- INSTALL 16"øX16"øX6:ø SADDLE FOR FIRE HYDRANT CONNECTION. (OR SIMILAR CONNECTION)
- INSTALL 2"øx16"ø SADDLE OR SIMILAR CONNECTION FOR NEW SERVICE CONNECTION @ EVERY 500 FEET.

0
SCALE IN FEET
HORIZ. 1": 20'
0 40' 80'
SCALE IN FEET
VERT. 1": 20'

No.	Description	Date

REV. NO.:
REVISION:
CHECKED BY:
APPROVED BY:
DATE:

PREPARED BY: FToala
CHECKED BY: LTyrell
APPROVED BY: FAguila / LTyrell
ISSUE FOR: Construction

ASPA
AMERICAN SAMOA POWER AUTHORITY
ENGINEERING SERVICES DIVISION
P.O.BOX PPB, TAFUNA, PAGO PAGO, AS 96799
AMERICAN SAMOA POWER AUTHORITY

PROJECT NAME: AOLOAU 6"Ø WATERLINE REPLACEMENT PROJECT
DRAWING TITLE: SEGMENT 1 PROFILE & PLAN (STA.35+00 to 40+00)
PROJECT LOCATION: AOLOAU VILLAGE, AMERICAN SAMOA

SCALE: AS SHOWN
PROJECT NO: 1958785
DATE: JULY 2023

SIGNATURE:
DATE:
SHEET NO. C08

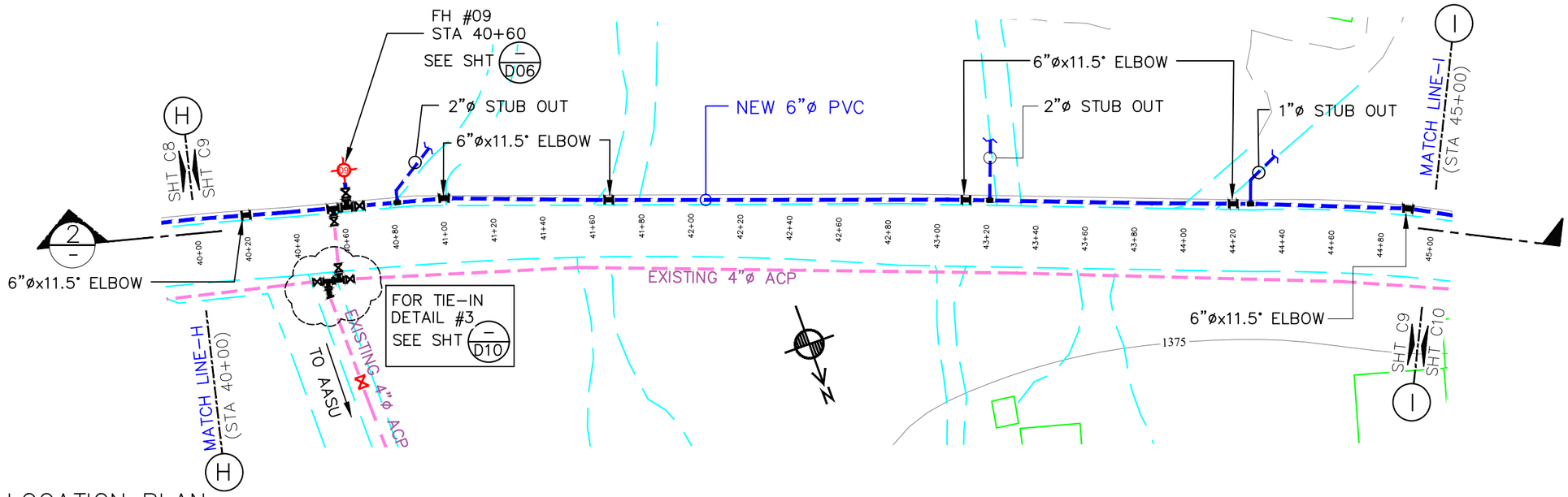

1 LOCATION PLAN
SCALE: AS SHOWN

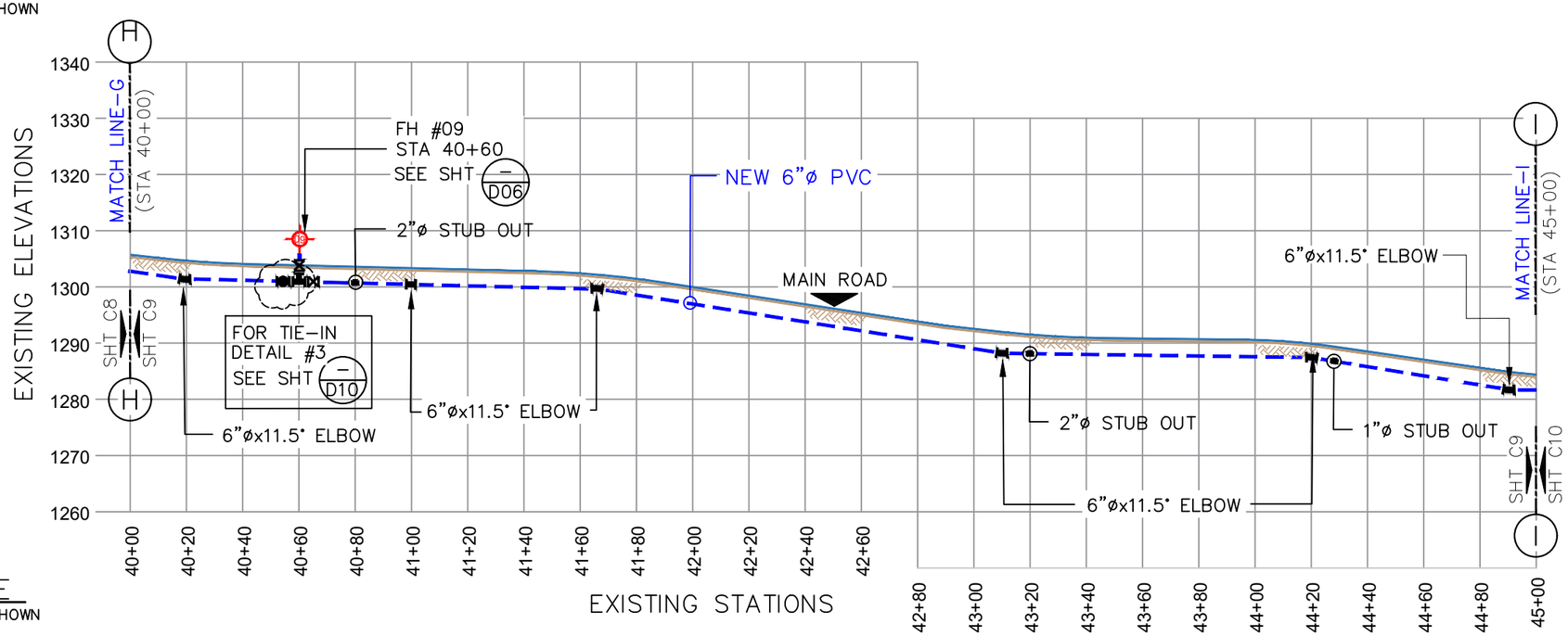

2 PROFILE
SCALE: AS SHOWN

LEGEND:
- EXISTING ACP WATER LINE:
- NEW 16"ø PVC:
- SEWER SERVICE LINE:
- EXISTING MAIN SEWER LINE:
- EXISTING STORM DRAIN:
- TELEPHONE CONDUIT:
- ELBOWS: 11.25°= 22.5°= 45°=
- FIRE HYDRANT: EXISTING NEW
- POWER/TEL POLE: TELEPHONE POLE ELECTRICITY POLE ALL IN 1 POLE
- TREES: HEDGES:
- SERVICE METER:
- GATE VALVE:
- STUB-OUT:
- AIR RELIEVE VALVE:
- BAC-T SAMPLING STN:
- PRV / PSV :
- ROADS: DIRT ROADS:

GENERAL NOTE:

- CONSTRUCTION CONTRACTOR SHALL FIELD VERIFY ALL EXISTING UNDERGROUND INFRASTRUCTURE TO ENSURE SAFETY OF ITS WORKERS.
- AVOID ANY DAMAGES TO EXISTING GOVERNMENT UTILITIES.
- INSTALL 16"øX16"øX6:ø SADDLE FOR FIRE HYDRANT CONNECTION. (OR SIMILAR CONNECTION)
- INSTALL 2"øx16"ø SADDLE OR SIMILAR CONNECTION FOR NEW SERVICE CONNECTION @ EVERY 500 FEET.

0
SCALE IN FEET
HORIZ. 1": 20'
0 40' 80'
SCALE IN FEET
VERT. 1": 20'

No.	Description	Date

REV. NO.:	PREPARED BY: FToala	AMERICAN SAMOA POWER AUTHORITY ENGINEERING SERVICES DIVISION P.O.BOX PPB, TAFUNA, PAGO PAGO, AS 96799	PROJECT NAME: AOLOAU 6"Ø WATERLINE REPLACEMENT PROJECT
REVISION:	CHECKED BY: LTyrell		DRAWING TITLE: SEGMENT 1 PROFILE & PLAN (STA.40+00 to 45+00)
CHECKED BY:	APPROVED BY: FAguila / LTyrell		PROJECT LOCATION: AOLOAU VILLAGE, AMERICAN SAMOA
APPROVED BY:	ISSUE FOR: Construction		
DATE:			

SCALE: AS SHOWN	SIGNATURE:	
PROJECT NO: 1958785	DATE:	
DATE: JULY 2023	SHEET NO. C09	

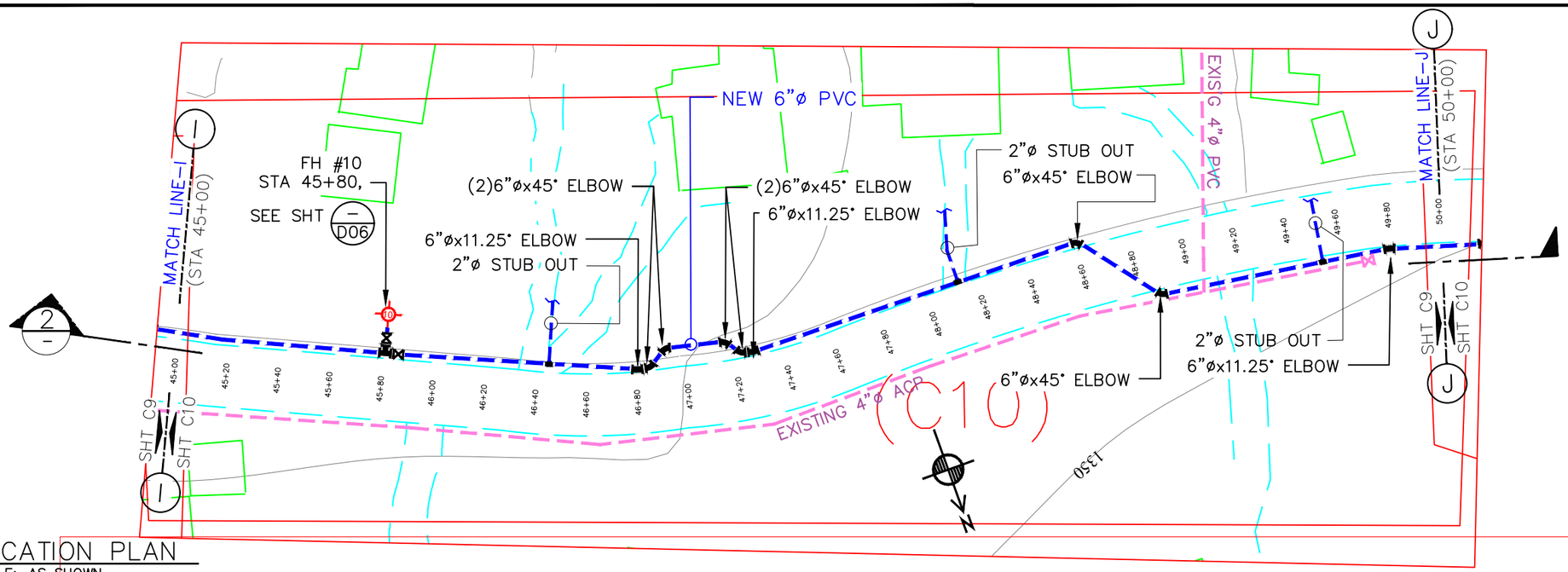

1 LOCATION PLAN
SCALE: AS SHOWN

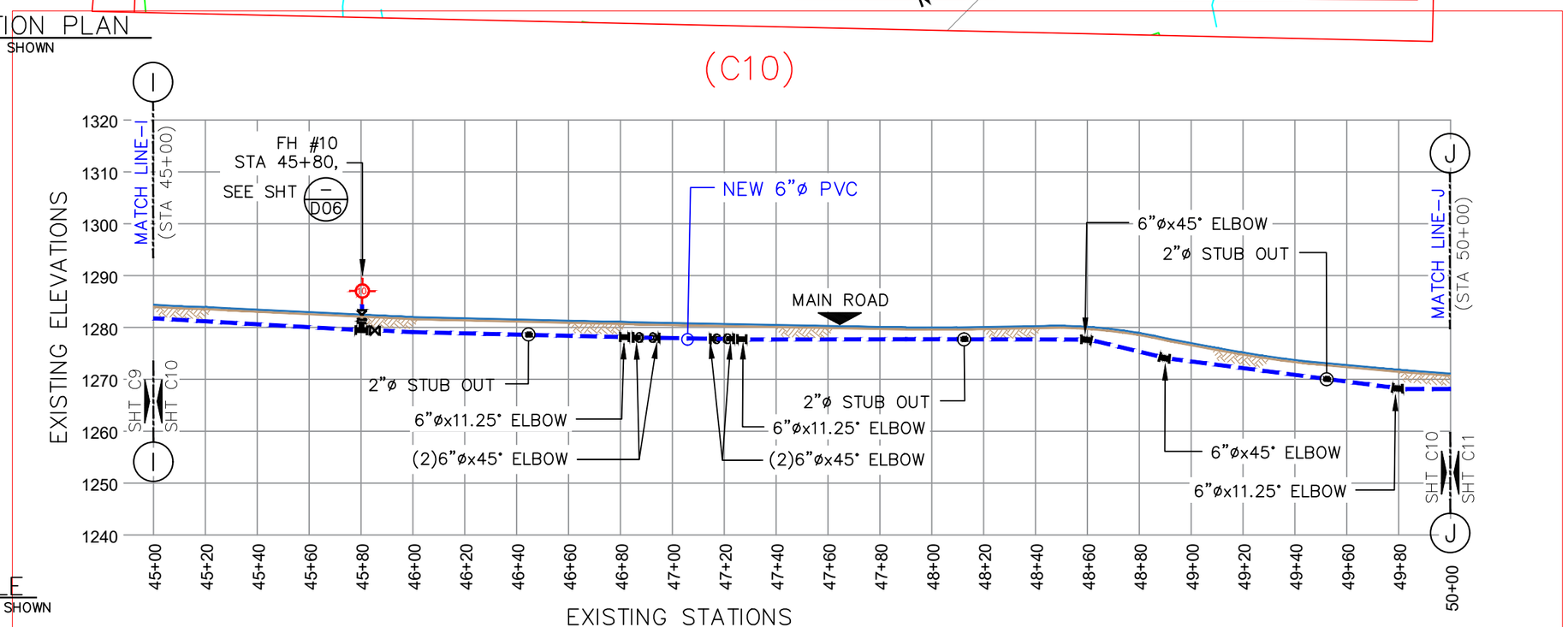

2 PROFILE
SCALE: AS SHOWN

LEGEND:
- EXISTING ACP WATER LINE:
- NEW 16"ø PVC:
- SEWER SERVICE LINE:
- EXISTING MAIN SEWER LINE:
- EXISTING STORM DRAIN:
- TELEPHONE CONDUIT:
- ELBOWS: 11.25°= 22.5°= 45°=
- FIRE HYDRANT: EXISTING NEW
- POWER/TEL POLE: TELEPHONE POLE ELECTRICITY POLE ALL IN 1 POLE
- TREES: HEDGES:
- SERVICE METER:
- GATE VALVE:
- STUB-OUT:
- AIR RELIEVE VALVE:
- BAC-T SAMPLING STN:
- PRV / PSV :
- ROADS: DIRT ROADS:

GENERAL NOTE:

- CONSTRUCTION CONTRACTOR SHALL FIELD VERIFY ALL EXISTING UNDERGROUND INFRASTRUCTURE TO ENSURE SAFETY OF ITS WORKERS.
- AVOID ANY DAMAGES TO EXISTING GOVERNMENT UTILITIES.
- INSTALL 16"øX16"øX6:ø SADDLE FOR FIRE HYDRANT CONNECTION. (OR SIMILAR CONNECTION)
- INSTALL 2"øx16"ø SADDLE OR SIMILAR CONNECTION FOR NEW SERVICE CONNECTION @ EVERY 500 FEET.

0
SCALE IN FEET
HORIZ. 1": 20'
0 40' 80'
SCALE IN FEET
VERT. 1": 20'

No.	Description	Date

REV. NO.:
REVISION:
CHECKED BY:
APPROVED BY:
DATE:

PREPARED BY: FToala
CHECKED BY: LTyrell
APPROVED BY: FAguila / LTyrell
ISSUE FOR: Construction

ASPA
AMERICAN SAMOA POWER AUTHORITY

AMERICAN SAMOA POWER AUTHORITY
ENGINEERING SERVICES DIVISION
P.O.BOX PPB, TAFUNA, PAGO PAGO, AS 96799

PROJECT NAME: AOLOAU 6"Ø WATERLINE REPLACEMENT PROJECT
DRAWING TITLE: SEGMENT 1 PROFILE & PLAN (STA.45+00 to 50+00)
PROJECT LOCATION: AOLOAU VILLAGE, AMERICAN SAMOA

SCALE: AS SHOWN
PROJECT NO: 1958785
DATE: JULY 2023

SIGNATURE:
DATE:
SHEET NO. C10

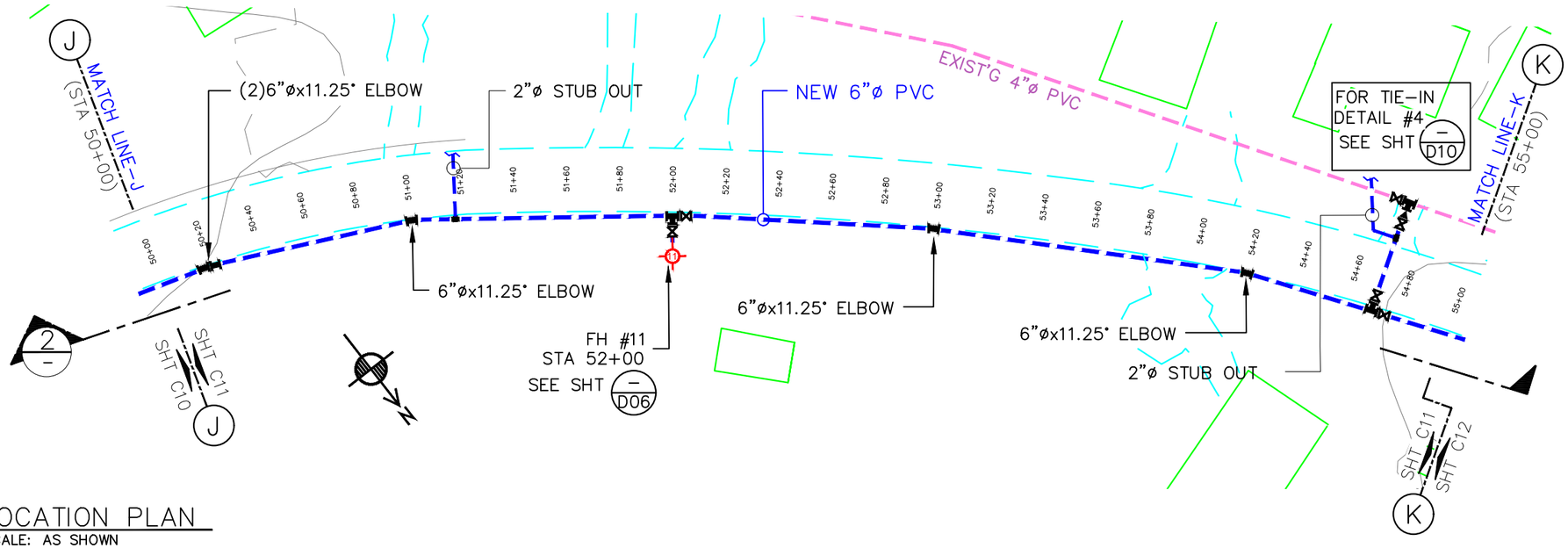

1 LOCATION PLAN
SCALE: AS SHOWN

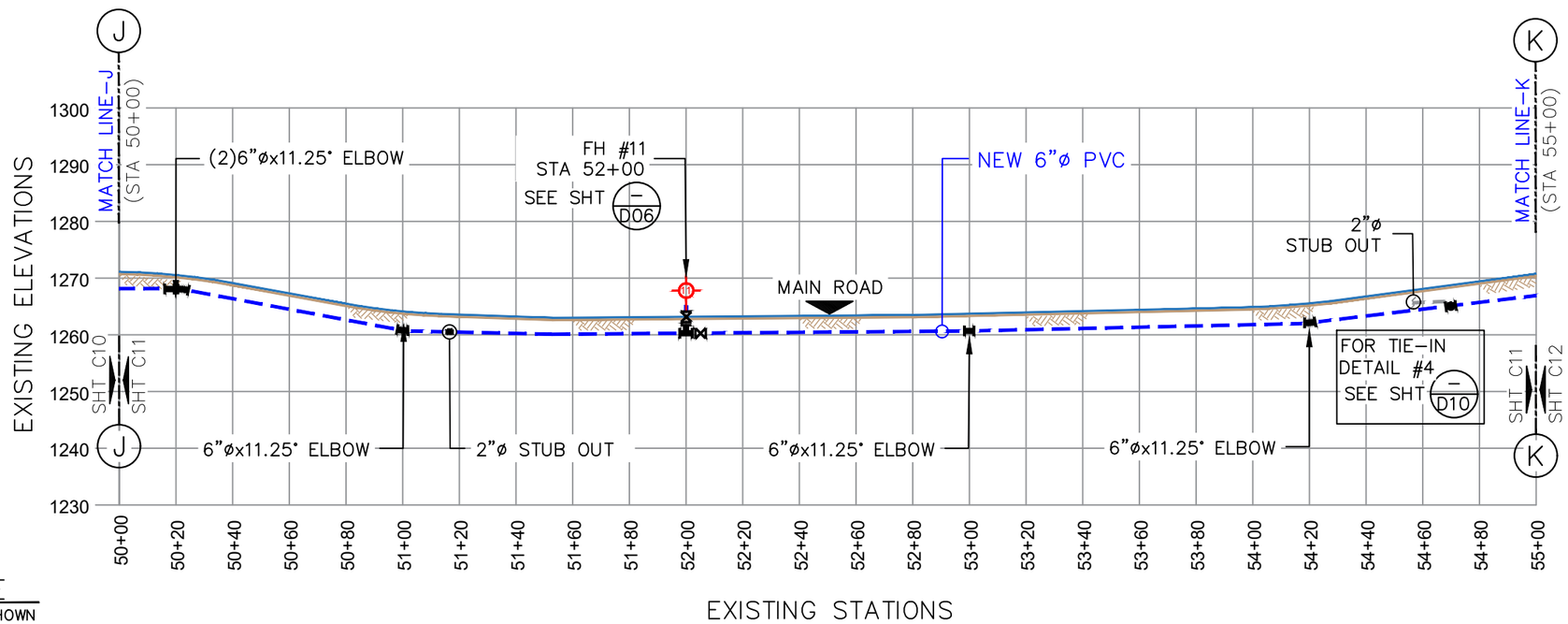

2 PROFILE
SCALE: AS SHOWN

LEGEND:
- EXISTING ACP WATER LINE:
- NEW 16"ø PVC:
- SEWER SERVICE LINE:
- EXISTING MAIN SEWER LINE:
- EXISTING STORM DRAIN:
- TELEPHONE CONDUIT:
- ELBOWS: 11.25°= 22.5°= 45°=
- FIRE HYDRANT: EXISTING NEW
- POWER/TEL POLE: TELEPHONE POLE ELECTRICITY POLE ALL IN 1 POLE
- TREES: HEDGES:
- SERVICE METER:
- GATE VALVE:
- STUB-OUT:
- AIR RELIEVE VALVE:
- BAC-T SAMPLING STN:
- PRV / PSV :
- ROADS: DIRT ROADS:

GENERAL NOTE:

- CONSTRUCTION CONTRACTOR SHALL FIELD VERIFY ALL EXISTING UNDERGROUND INFRASTRUCTURE TO ENSURE SAFETY OF ITS WORKERS.
- AVOID ANY DAMAGES TO EXISTING GOVERNMENT UTILITIES.
- INSTALL 16"øX16"øX6:ø SADDLE FOR FIRE HYDRANT CONNECTION. (OR SIMILAR CONNECTION)
- INSTALL 2"øx16"ø SADDLE OR SIMILAR CONNECTION FOR NEW SERVICE CONNECTION @ EVERY 500 FEET.

0
SCALE IN FEET
HORIZ. 1": 20'
0 40' 80'
SCALE IN FEET
VERT. 1": 20'

No.	Description	Date

REV. NO.:
REVISION:
CHECKED BY:
APPROVED BY:
DATE:

PREPARED BY: FToala
CHECKED BY: LTyrell
APPROVED BY: FAguila / LTyrell
ISSUE FOR: Construction

ASPA
AMERICAN SAMOA POWER AUTHORITY

AMERICAN SAMOA POWER AUTHORITY
ENGINEERING SERVICES DIVISION
P.O.BOX PPB, TAFUNA, PAGO PAGO, AS 96799

PROJECT NAME: AOLOAU 6"Ø WATERLINE REPLACEMENT PROJECT
DRAWING TITLE: SEGMENT 1 PROFILE & PLAN (STA.50+00 to 55+00)
PROJECT LOCATION: AOLOAU VILLAGE, AMERICAN SAMOA

SCALE: AS SHOWN
PROJECT NO: 1958785
DATE: JULY 2023

SIGNATURE:
DATE:
SHEET NO. C11

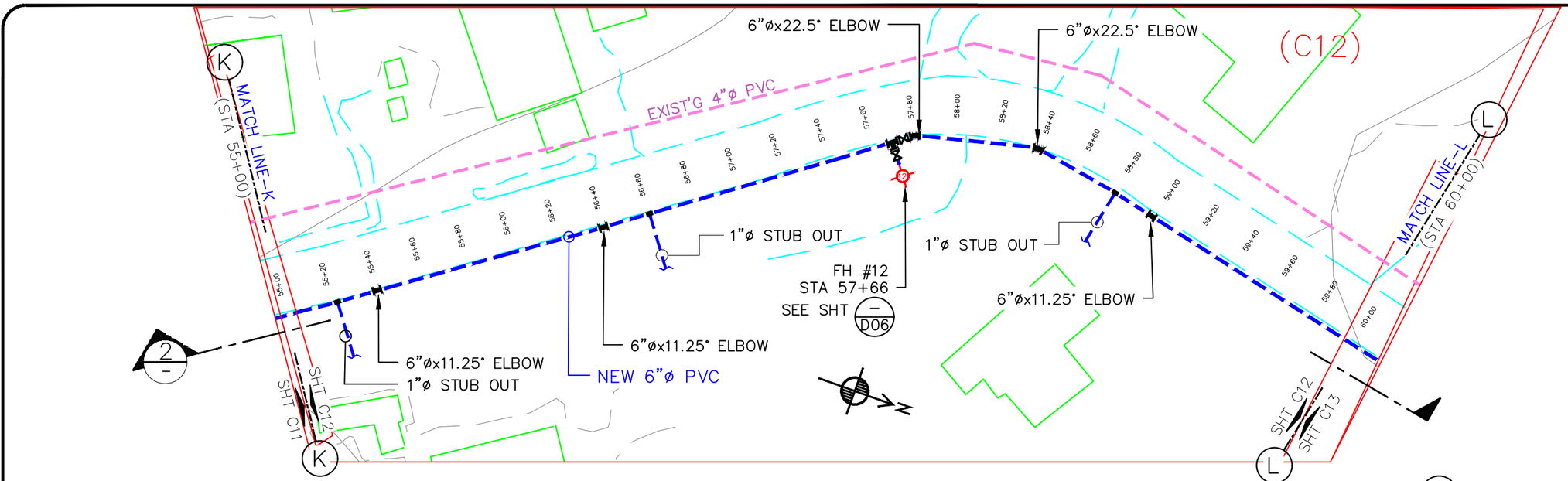

1 LOCATION PLAN
SCALE: AS SHOWN

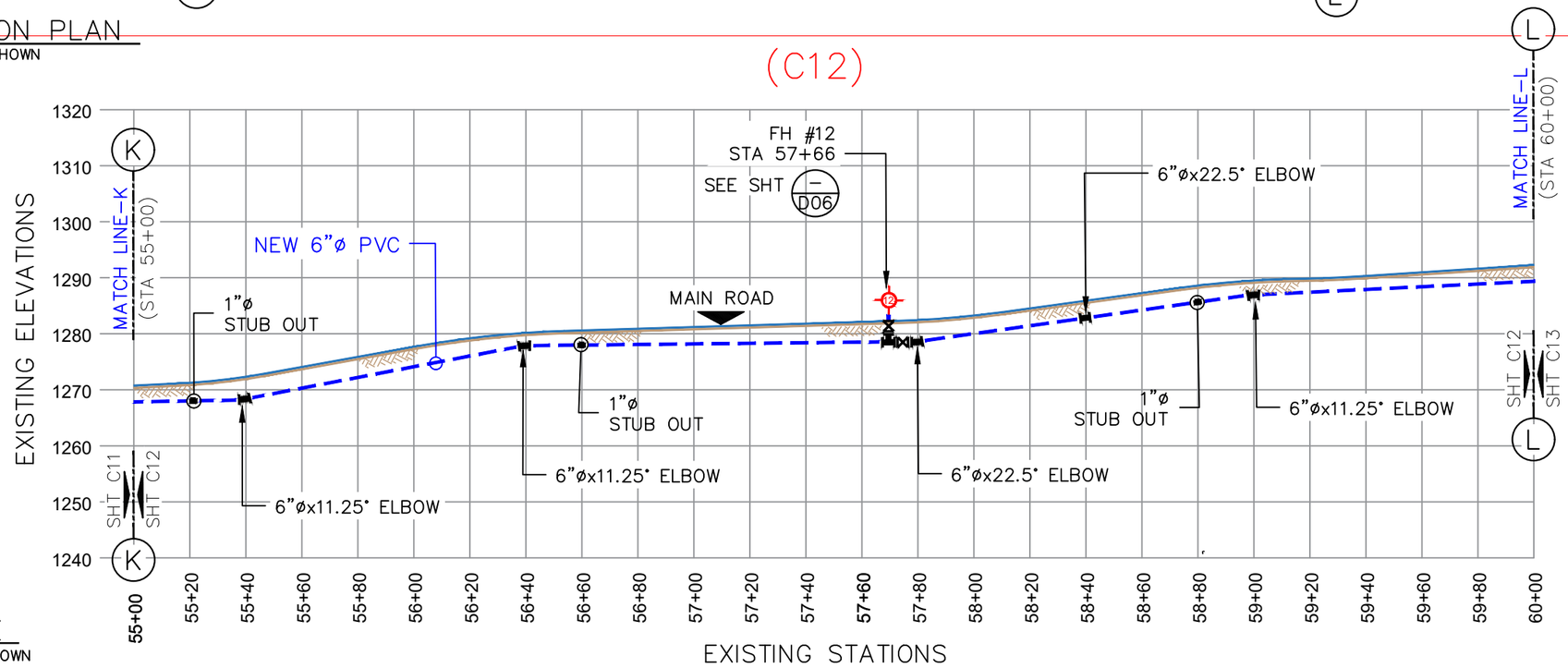

2 PROFILE
SCALE: AS SHOWN

LEGEND:
EXISTING ACP WATER LINE:
NEW 16"ø PVC:
SEWER SERVICE LINE:
EXISTING MAIN SEWER LINE:
EXISTING STORM DRAIN:
TELEPHONE CONDUIT:
ELBOWS: 11.25°= 22.5°= 45°=
FIRE HYDRANT: EXISTING NEW
POWER/TEL POLE: TELEPHONE POLE ELECTRICITY POLE ALL IN 1 POLE
TREES: HEDGES:
SERVICE METER:
GATE VALVE:
STUB-OUT:
AIR RELIEVE VALVE:
BAC-T SAMPLING STN:
PRV / PSV :
ROADS: DIRT ROADS:

GENERAL NOTE:

- CONSTRUCTION CONTRACTOR SHALL FIELD VERIFY ALL EXISTING UNDERGROUND INFRASTRUCTURE TO ENSURE SAFETY OF ITS WORKERS.
- AVOID ANY DAMAGES TO EXISTING GOVERNMENT UTILITIES.
- INSTALL 16"øX16"øX6:ø SADDLE FOR FIRE HYDRANT CONNECTION. (OR SIMILAR CONNECTION)
- INSTALL 2"øx16"ø SADDLE OR SIMILAR CONNECTION FOR NEW SERVICE CONNECTION @ EVERY 500 FEET.

0
SCALE IN FEET
HORIZ. 1": 20'
0 40' 80'
SCALE IN FEET
VERT. 1": 20'

No.	Description	Date

REV. NO.:
REVISION:
CHECKED BY:
APPROVED BY:
DATE:

PREPARED BY: FToala
CHECKED BY: LTyrell
APPROVED BY: FAguila / LTyrell
ISSUE FOR: Construction

ASPA
AMERICAN SAMOA POWER AUTHORITY

AMERICAN SAMOA POWER AUTHORITY
ENGINEERING SERVICES DIVISION
P.O.BOX PPB, TAFUNA, PAGO PAGO, AS 96799

PROJECT NAME: AOLOAU 6"Ø WATERLINE REPLACEMENT PROJECT
DRAWING TITLE: SEGMENT 1 PROFILE & PLAN (STA.55+00 to 60+00)
PROJECT LOCATION: AOLOAU VILLAGE, AMERICAN SAMOA

SCALE: AS SHOWN
PROJECT NO: 1958785
DATE: JULY 2023

SIGNATURE:
DATE:
SHEET NO. C12

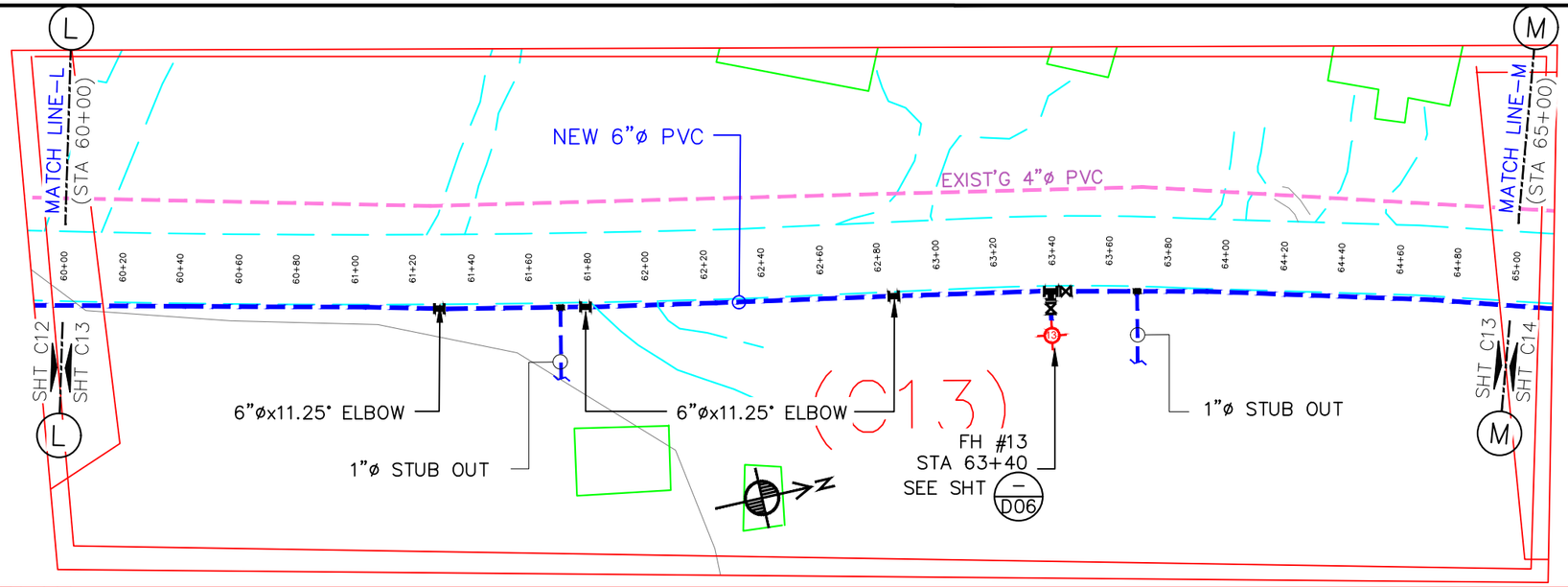

1 LOCATION PLAN
SCALE: AS SHOWN

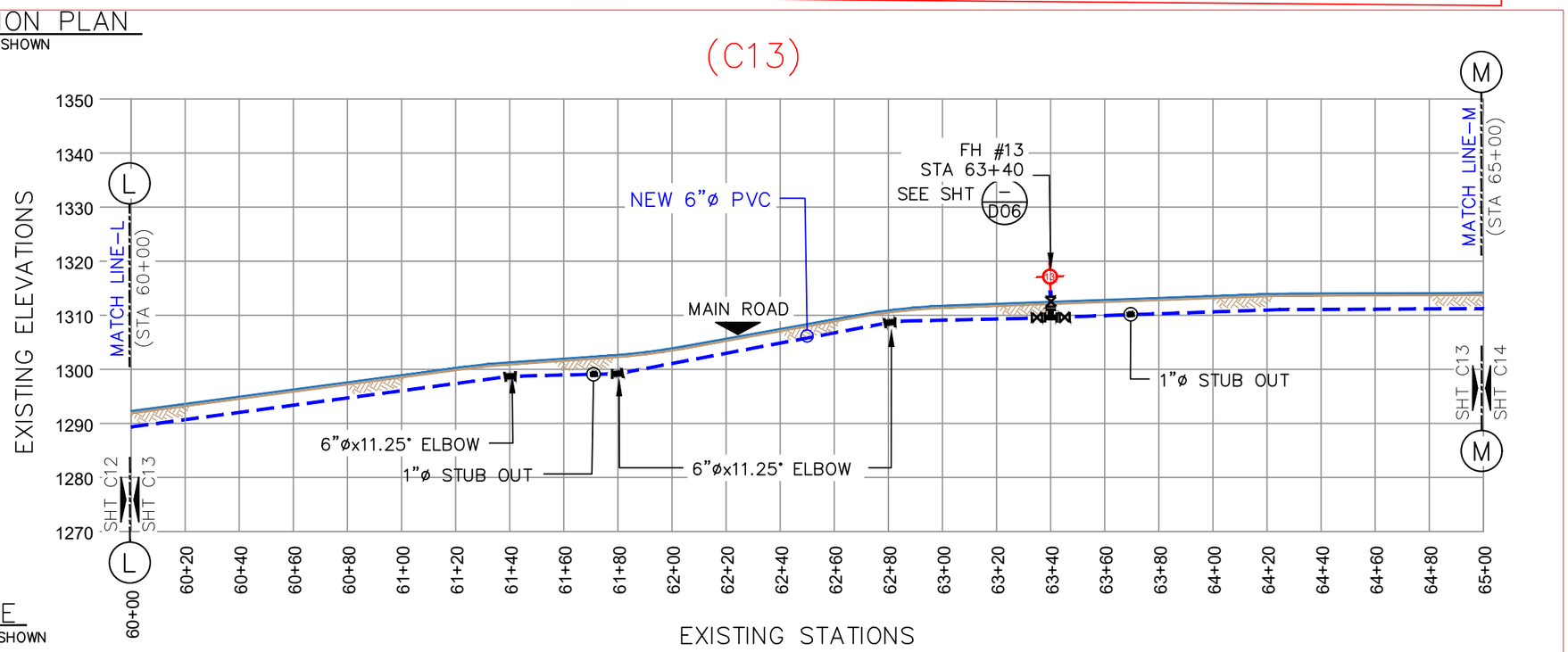

2 PROFILE
SCALE: AS SHOWN

LEGEND:
- EXISTING ACP WATER LINE:
- NEW 16"ø PVC:
- SEWER SERVICE LINE:
- EXISTING MAIN SEWER LINE:
- EXISTING STORM DRAIN:
- TELEPHONE CONDUIT:
- ELBOWS: 11.25°= 22.5°= 45°=
- FIRE HYDRANT: EXISTING NEW
- POWER/TEL POLE: TELEPHONE POLE, ELECTRICITY POLE, ALL IN 1 POLE
- TREES: HEDGES:
- SERVICE METER:
- GATE VALVE:
- STUB-OUT:
- AIR RELIEVE VALVE:
- BAC-T SAMPLING STN:
- PRV / PSV :
- ROADS: DIRT ROADS:

GENERAL NOTE:

- CONSTRUCTION CONTRACTOR SHALL FIELD VERIFY ALL EXISTING UNDERGROUND INFRASTRUCTURE TO ENSURE SAFETY OF ITS WORKERS.
- AVOID ANY DAMAGES TO EXISTING GOVERNMENT UTILITIES.
- INSTALL 16"øX16"øX6:ø SADDLE FOR FIRE HYDRANT CONNECTION. (OR SIMILAR CONNECTION)
- INSTALL 2"øx16"ø SADDLE OR SIMILAR CONNECTION FOR NEW SERVICE CONNECTION @ EVERY 500 FEET.

0
SCALE IN FEET
HORIZ. 1": 20'
0 40' 80'
SCALE IN FEET
VERT. 1": 20'

No.	Description	Date

REV. NO.:
REVISION:
CHECKED BY:
APPROVED BY:
DATE:

PREPARED BY: FToala
CHECKED BY: LTyrell
APPROVED BY: FAguila / LTyrell
ISSUE FOR: Construction

ASPA
AMERICAN SAMOA POWER AUTHORITY

AMERICAN SAMOA POWER AUTHORITY
ENGINEERING SERVICES DIVISION
P.O.BOX PPB, TAFUNA, PAGO PAGO, AS 96799

PROJECT NAME: AOLOAU 6"Ø WATERLINE REPLACEMENT PROJECT
DRAWING TITLE: SEGMENT 1 PROFILE & PLAN (STA.60+00 to 65+00)
PROJECT LOCATION: AOLOAU VILLAGE, AMERICAN SAMOA

SCALE: AS SHOWN
PROJECT NO: 1958785
DATE: JULY 2023

SIGNATURE:
DATE:
SHEET NO. C13

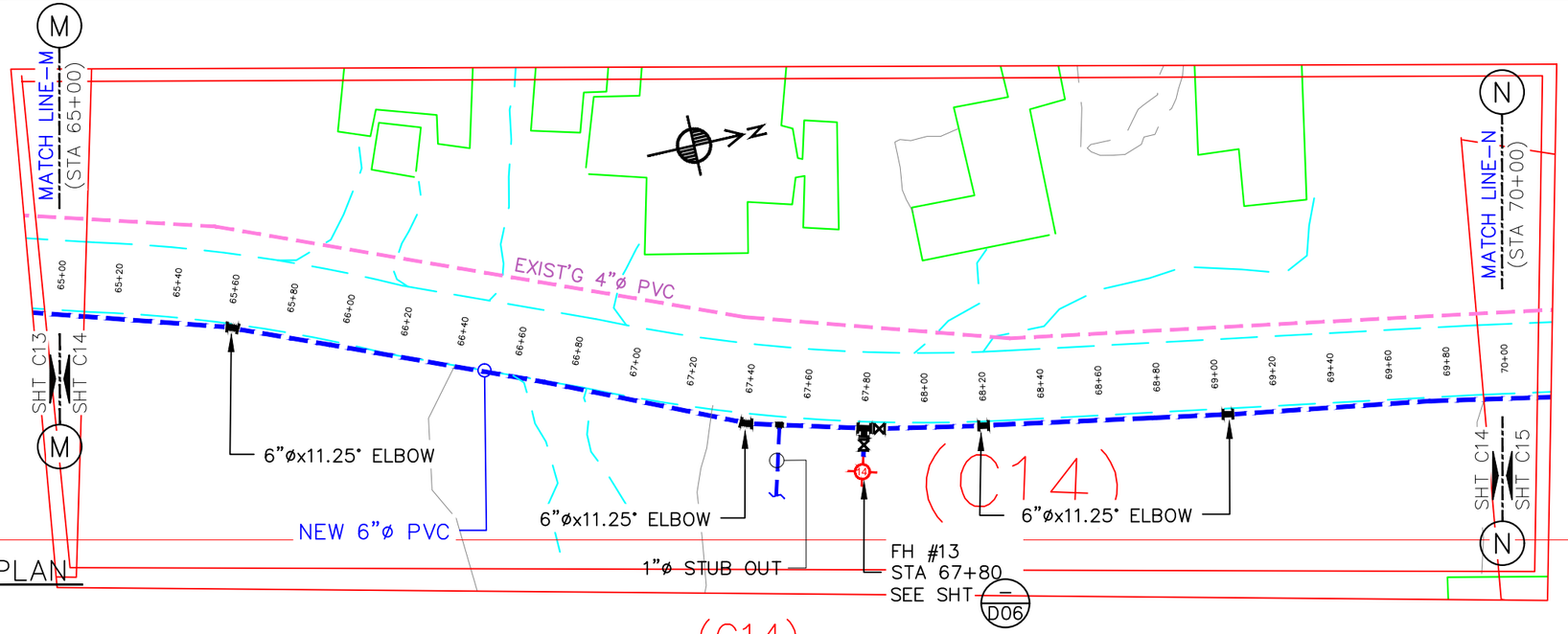

1 LOCATION PLAN
SCALE: AS SHOWN

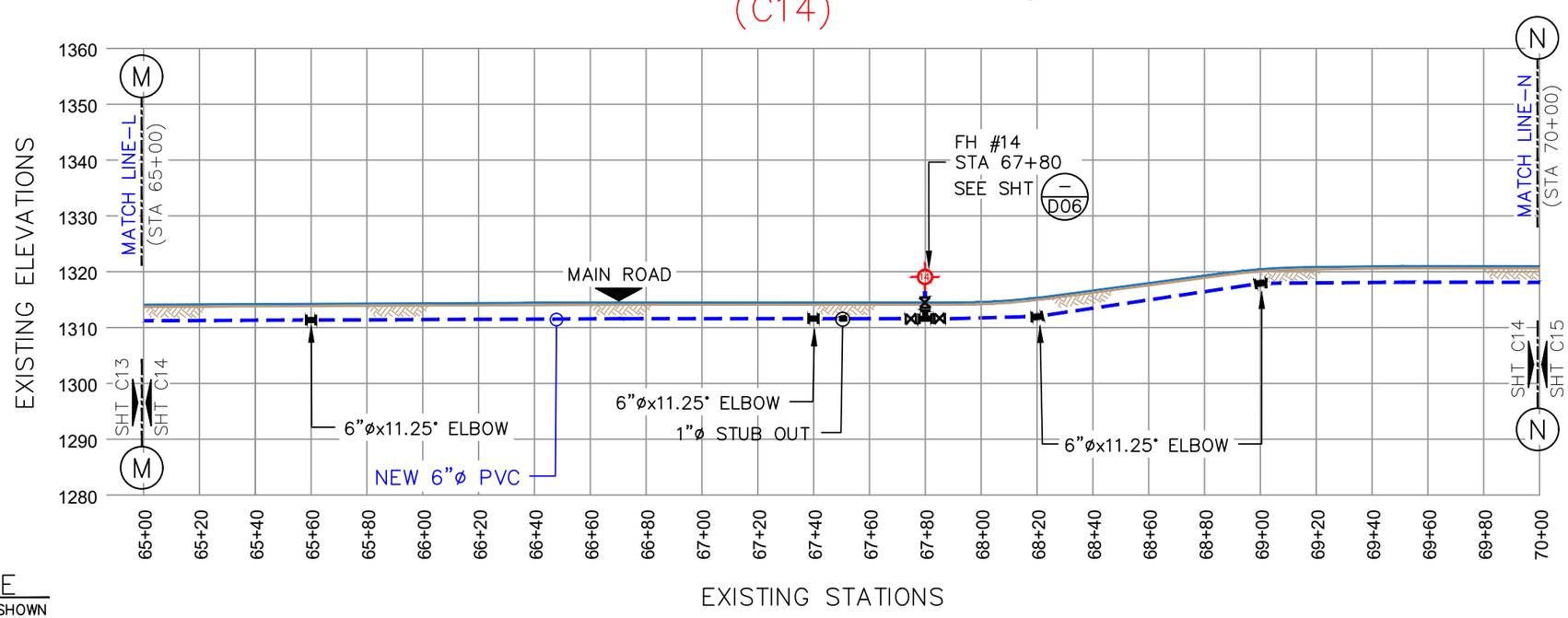

2 PROFILE
SCALE: AS SHOWN

LEGEND:
- EXISTING ACP WATER LINE:
- NEW 16"ø PVC:
- SEWER SERVICE LINE:
- EXISTING MAIN SEWER LINE:
- EXISTING STORM DRAIN:
- TELEPHONE CONDUIT:
- ELBOWS: 11.25°= 22.5°= 45°=
- FIRE HYDRANT: EXISTING NEW
- POWER/TEL POLE: TELEPHONE POLE, ELECTRICITY POLE, ALL IN 1 POLE
- TREES: HEDGES:
- SERVICE METER:
- GATE VALVE:
- STUB-OUT:
- AIR RELIEVE VALVE:
- BAC-T SAMPLING STN:
- PRV / PSV :
- ROADS: DIRT ROADS:

GENERAL NOTE:

- CONSTRUCTION CONTRACTOR SHALL FIELD VERIFY ALL EXISTING UNDERGROUND INFRASTRUCTURE TO ENSURE SAFETY OF ITS WORKERS.
- AVOID ANY DAMAGES TO EXISTING GOVERNMENT UTILITIES.
- INSTALL 16"øX16"øX6:ø SADDLE FOR FIRE HYDRANT CONNECTION. (OR SIMILAR CONNECTION)
- INSTALL 2"øx16"ø SADDLE OR SIMILAR CONNECTION FOR NEW SERVICE CONNECTION @ EVERY 500 FEET.

0
SCALE IN FEET
HORIZ. 1": 20'
0 40' 80'
SCALE IN FEET
VERT. 1": 20'

No.	Description	Date

REV. NO.:
REVISION:
CHECKED BY:
APPROVED BY:
DATE:

PREPARED BY: FToala
CHECKED BY: FLTyrell
APPROVED BY: FAguila / LTyrell
ISSUE FOR: Construction

ASPA
AMERICAN SAMOA POWER AUTHORITY

AMERICAN SAMOA POWER AUTHORITY
ENGINEERING SERVICES DIVISION
P.O.BOX PPB, TAFUNA, PAGO PAGO, AS 96799

PROJECT NAME: AOLOAU 6"Ø WATERLINE REPLACEMENT PROJECT
DRAWING TITLE: SEGMENT 1
PROFILE & PLAN (STA.65+00 to 70+00)
PROJECT LOCATION: AOLOAU VILLAGE, AMERICAN SAMOA

SCALE: AS SHOWN
PROJECT NO: 1958785
DATE: JULY 2023

SIGNATURE:
DATE:
SHEET NO. C14

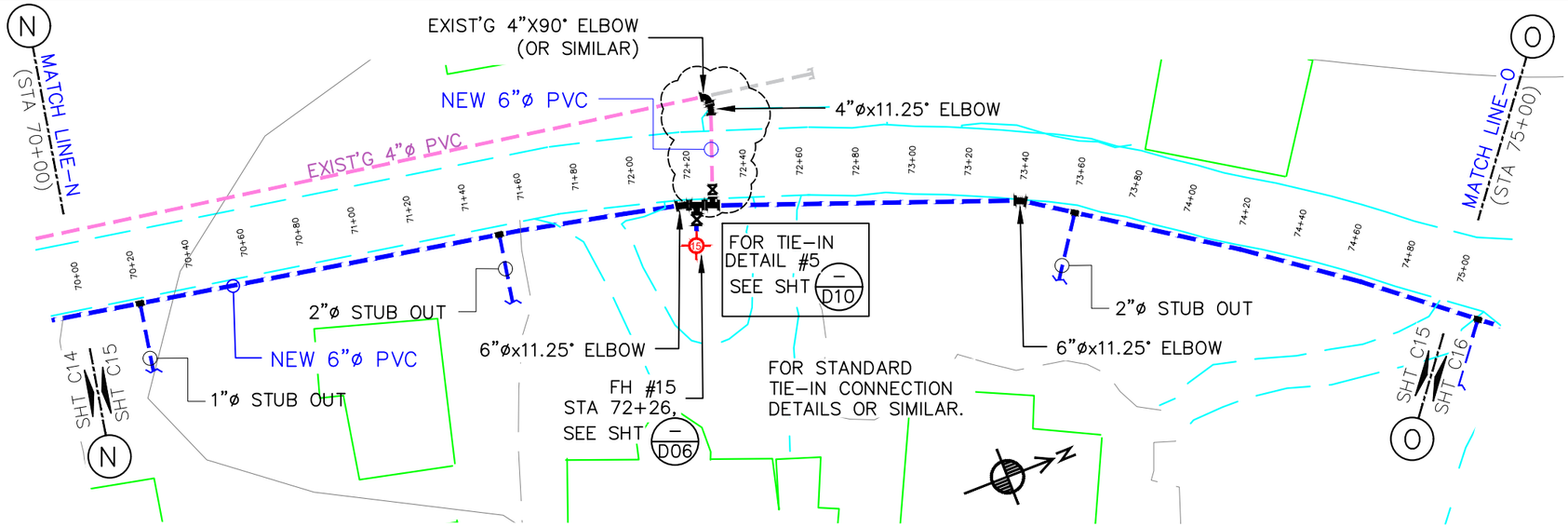

1 LOCATION PLAN
SCALE: AS SHOWN

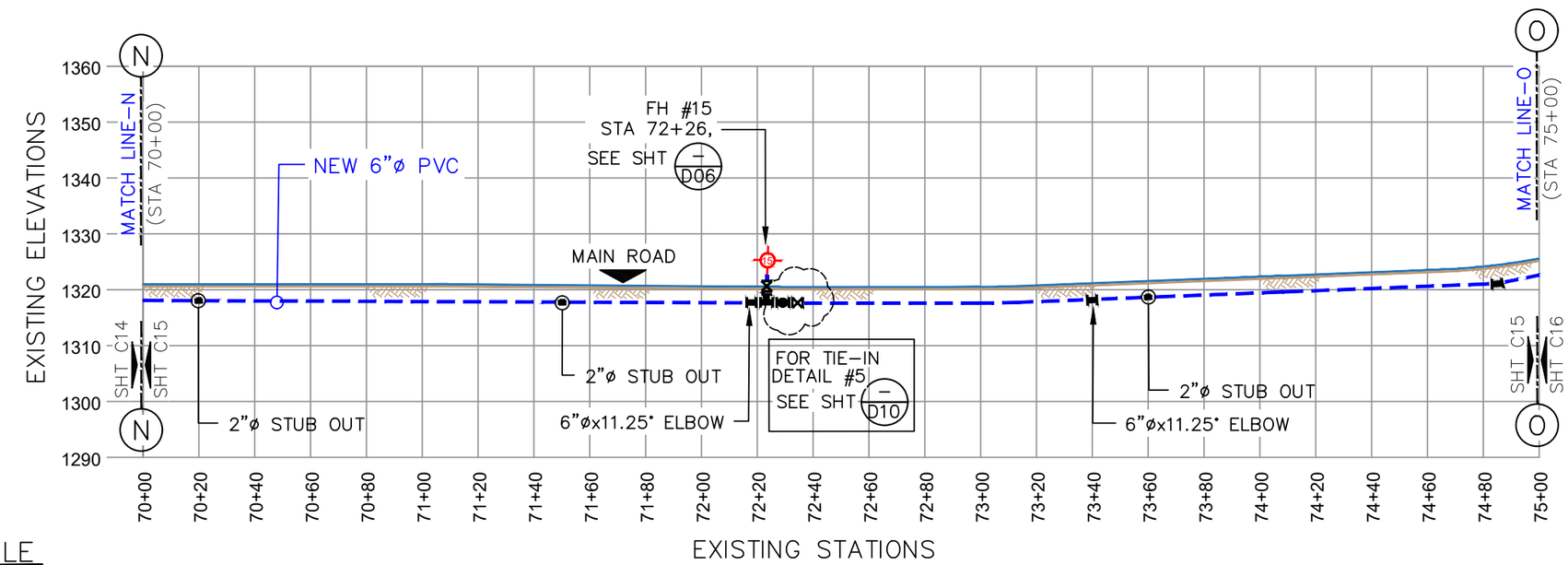

2 PROFILE
SCALE: AS SHOWN

LEGEND:
EXISTING ACP WATER LINE:
NEW 16"ø PVC:
SEWER SERVICE LINE:
EXISTING MAIN SEWER LINE:
EXISTING STORM DRAIN:
TELEPHONE CONDUIT:
ELBOWS: 11.25°= 22.5°= 45°=
FIRE HYDRANT: EXISTING NEW
POWER/TEL POLE: TELEPHONE POLE ELECTRICITY POLE ALL IN 1 POLE
TREES: HEDGES:
SERVICE METER:
GATE VALVE:
STUB-OUT:
AIR RELIEVE VALVE:
BAC-T SAMPLING STN:
PRV / PSV :
ROADS: DIRT ROADS:

GENERAL NOTE:

- CONSTRUCTION CONTRACTOR SHALL FIELD VERIFY ALL EXISTING UNDERGROUND INFRASTRUCTURE TO ENSURE SAFETY OF ITS WORKERS.
- AVOID ANY DAMAGES TO EXISTING GOVERNMENT UTILITIES.
- INSTALL 16"øX16"øX6:ø SADDLE FOR FIRE HYDRANT CONNECTION. (OR SIMILAR CONNECTION)
- INSTALL 2"øx16"ø SADDLE OR SIMILAR CONNECTION FOR NEW SERVICE CONNECTION @ EVERY 500 FEET.

0
SCALE IN FEET
HORIZ. 1": 20'
0 40' 80'
SCALE IN FEET
VERT. 1": 20'

No.	Description	Date

REV. NO.:
REVISION:
CHECKED BY:
APPROVED BY:
DATE:

PREPARED BY: FToala
CHECKED BY: LTyrell
APPROVED BY: FAguila / LTyrell
ISSUE FOR: Construction

ASPA
AMERICAN SAMOA POWER AUTHORITY

AMERICAN SAMOA POWER AUTHORITY
ENGINEERING SERVICES DIVISION
P.O.BOX PPB, TAFUNA, PAGO PAGO, AS 96799

PROJECT NAME: AOLOAU 6"Ø WATERLINE REPLACEMENT PROJECT
DRAWING TITLE: SEGMENT 1 PROFILE & PLAN (STA.70+00 to 75+00)
PROJECT LOCATION: AOLOAU VILLAGE, AMERICAN SAMOA

SCALE: AS SHOWN
PROJECT NO: 1958785
DATE: JULY 2023

SIGNATURE:
DATE:
SHEET NO. C15

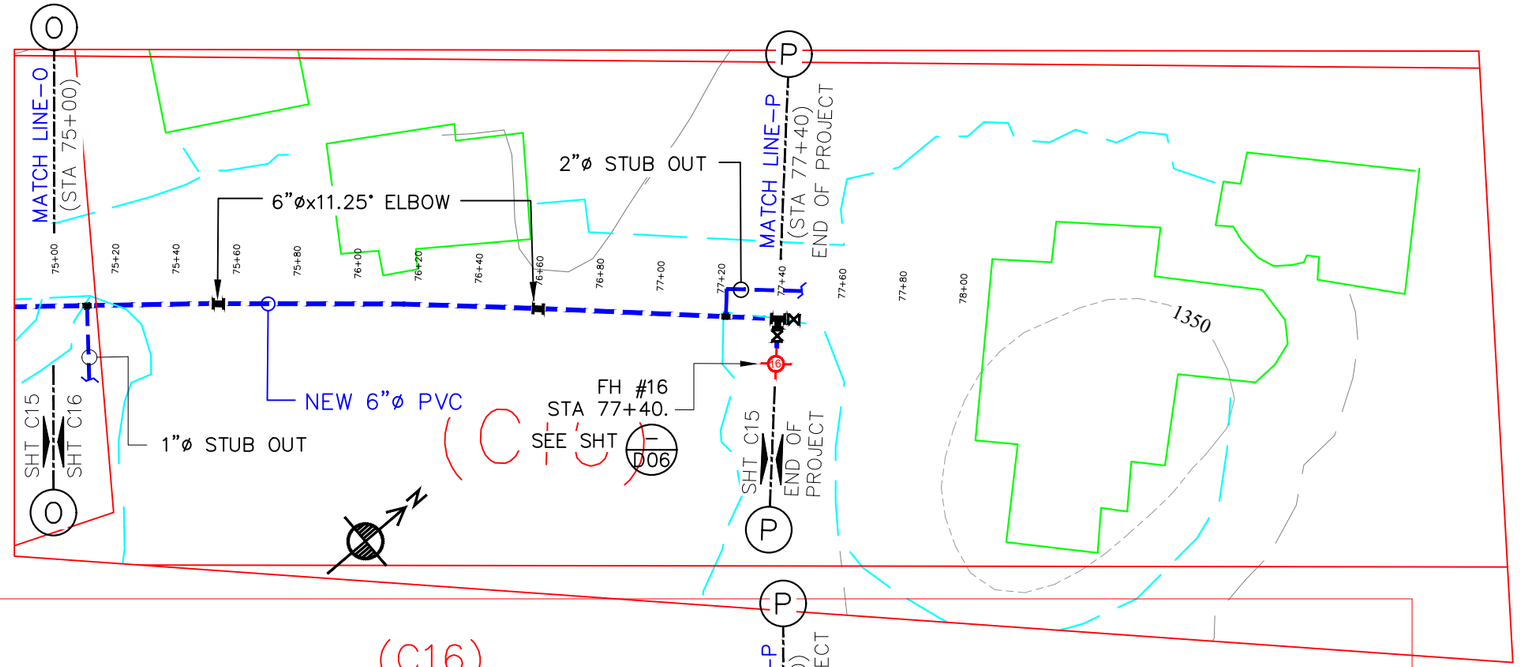

1 LOCATION PLAN
SCALE: AS SHOWN

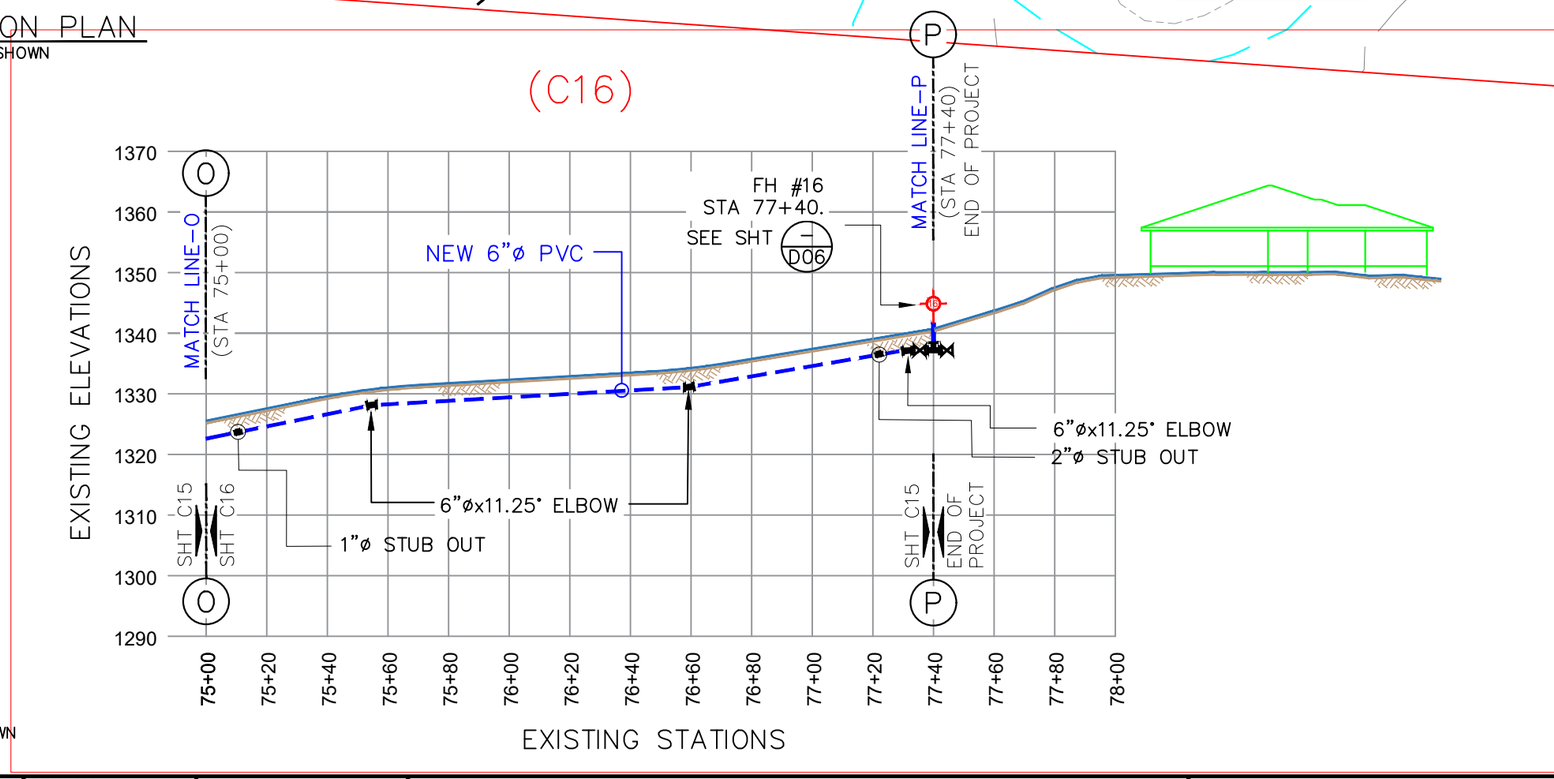

2 PROFILE
SCALE: AS SHOWN

LEGEND:
- EXISTING ACP WATER LINE:
- NEW 16"ø PVC:
- SEWER SERVICE LINE:
- EXISTING MAIN SEWER LINE:
- EXISTING STORM DRAIN:
- TELEPHONE CONDUIT:
- ELBOWS: 11.25°= 22.5°= 45°=
- FIRE HYDRANT: EXISTING NEW
- POWER/TEL POLE: TELEPHONE POLE ELECTRICITY POLE ALL IN 1 POLE
- TREES: HEDGES:
- SERVICE METER:
- GATE VALVE:
- STUB-OUT:
- AIR RELIEVE VALVE:
- BAC-T SAMPLING STN:
- PRV / PSV :
- ROADS: DIRT ROADS:

GENERAL NOTE:

- CONSTRUCTION CONTRACTOR SHALL FIELD VERIFY ALL EXISTING UNDERGROUND INFRASTRUCTURE TO ENSURE SAFETY OF ITS WORKERS.
- AVOID ANY DAMAGES TO EXISTING GOVERNMENT UTILITIES.
- INSTALL 16"øX16"øX6:ø SADDLE FOR FIRE HYDRANT CONNECTION. (OR SIMILAR CONNECTION)
- INSTALL 2"øx16"ø SADDLE OR SIMILAR CONNECTION FOR NEW SERVICE CONNECTION @ EVERY 500 FEET.

0
SCALE IN FEET
HORIZ. 1":20'
0 40' 80'
SCALE IN FEET
VERT. 1":20'

No.	Description	Date

REV. NO.:
REVISION:
CHECKED BY:
APPROVED BY:
DATE:

PREPARED BY: FToala
CHECKED BY: LTyrell
APPROVED BY: FAguila / LTyrell
ISSUE FOR: Construction

ASPA
AMERICAN SAMOA POWER AUTHORITY

AMERICAN SAMOA POWER AUTHORITY
ENGINEERING SERVICES DIVISION
P.O.BOX PPB, TAFUNA, PAGO PAGO, AS 96799

PROJECT NAME: AOLOAU 6"Ø WATERLINE REPLACEMENT PROJECT
DRAWING TITLE: END OF SEGMENT 1 PROFILE & PLAN (STA.75+00 to 78+00)
PROJECT LOCATION: AOLOAU VILLAGE, AMERICAN SAMOA

SCALE: AS SHOWN
PROJECT NO: 1958785
DATE: JULY 2023

SIGNATURE:
DATE:
SHEET NO. C16

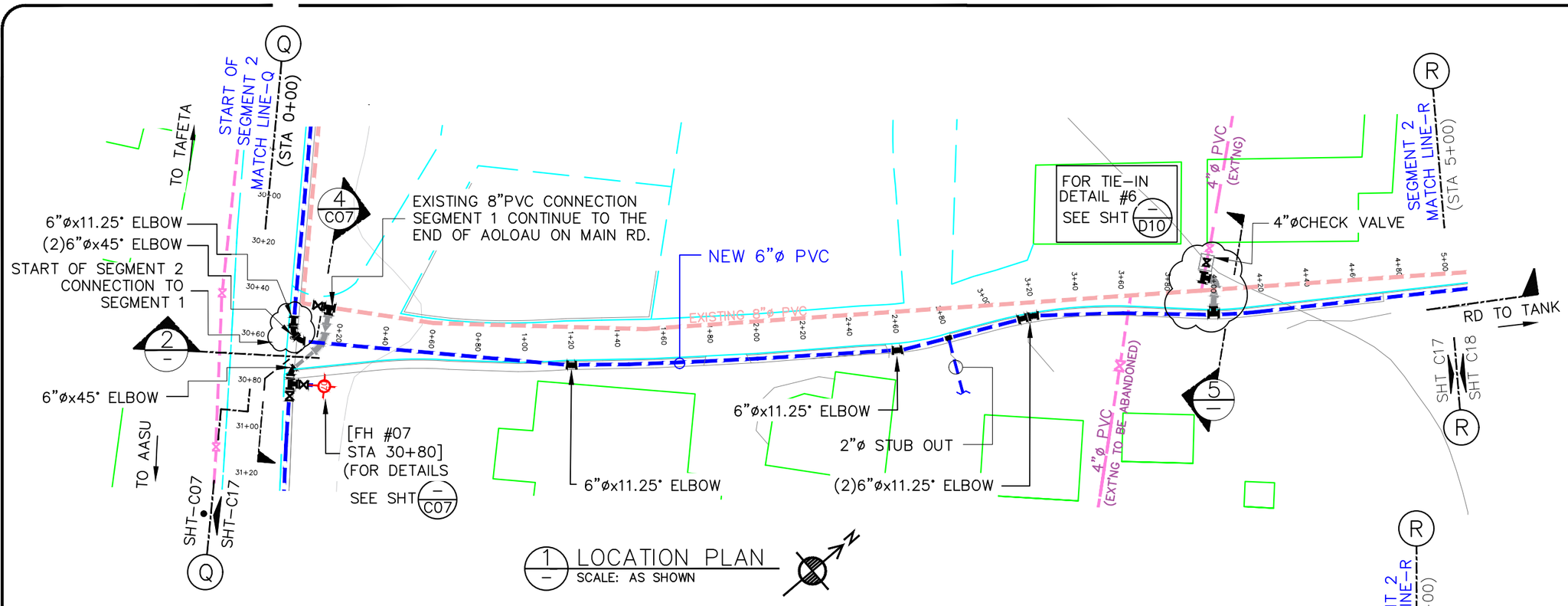

1 LOCATION PLAN
SCALE: AS SHOWN

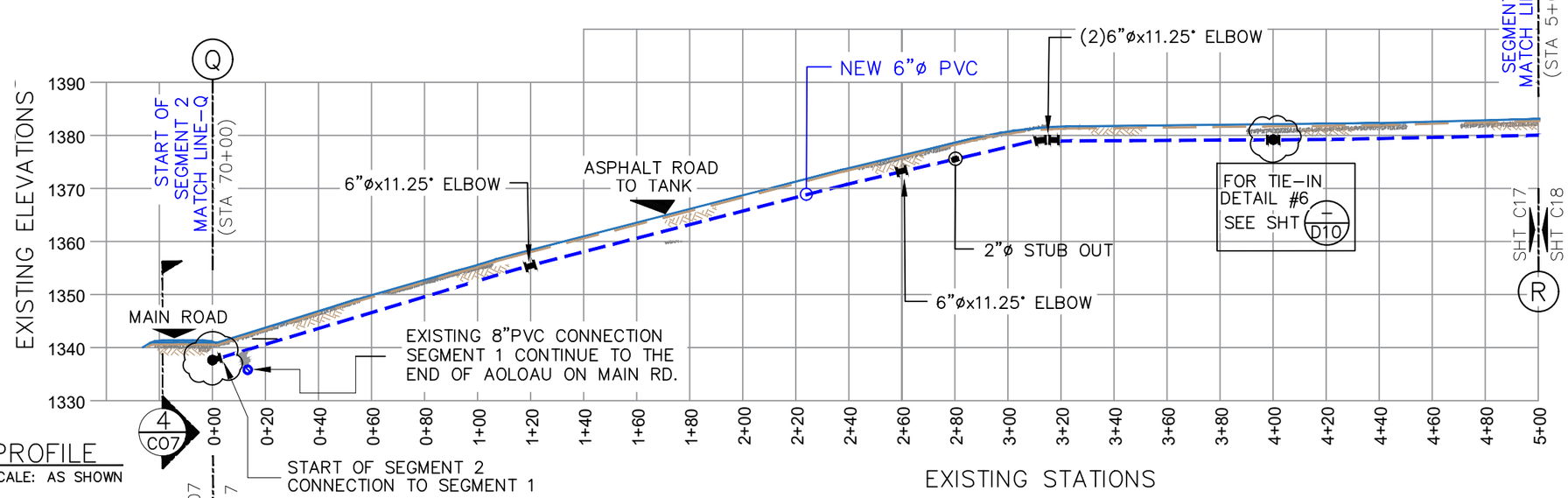

2 PROFILE
SCALE: AS SHOWN

LEGEND:
- EXISTING ACP WATER LINE:
- NEW 16"ø PVC:
- SEWER SERVICE LINE:
- EXISTING MAIN SEWER LINE:
- EXISTING STORM DRAIN:
- TELEPHONE CONDUIT:
- ELBOWS: 11.25°= 22.5°= 45°=
- FIRE HYDRANT: EXISTING NEW
- POWER/TEL POLE: TELEPHONE POLE, ELECTRICITY POLE, ALL IN 1 POLE
- TREES: HEDGES:
- SERVICE METER:
- GATE VALVE:
- STUB-OUT:
- AIR RELIEVE VALVE:
- BAC-T SAMPLING STN:
- PRV / PSV :
- ROADS: DIRT ROADS:

GENERAL NOTE:

- CONSTRUCTION CONTRACTOR SHALL FIELD VERIFY ALL EXISTING UNDERGROUND INFRASTRUCTURE TO ENSURE SAFETY OF ITS WORKERS.
- AVOID ANY DAMAGES TO EXISTING GOVERNMENT UTILITIES.
- INSTALL 16"øX16"øX6:ø SADDLE FOR FIRE HYDRANT CONNECTION. (OR SIMILAR CONNECTION)
- INSTALL 2"øx16"ø SADDLE OR SIMILAR CONNECTION FOR NEW SERVICE CONNECTION @ EVERY 500 FEET.

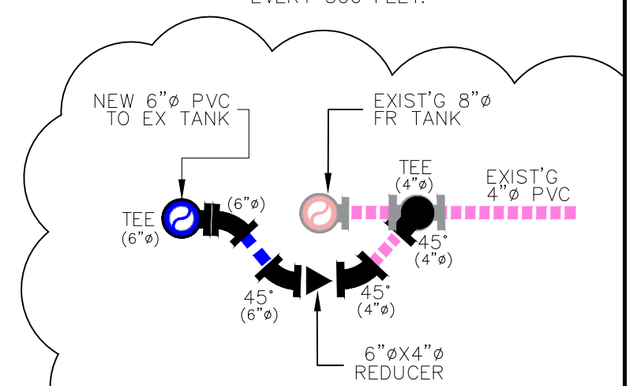

5 DETAILS (OR SIMILAR)
SCALE: AS SHOWN

No.	Description	Date

REV. NO.:
REVISION:
CHECKED BY:
DATE:
APPROVED BY:

PREPARED BY: FToala
CHECKED BY: LTyrell
APPROVED BY: FAguila / LTyrell
ISSUE FOR: Construction

AMERICAN SAMOA POWER AUTHORITY
ENGINEERING SERVICES DIVISION
P.O.BOX PPB, TAFUNA, PAGO PAGO, AS 96799

PROJECT NAME: AOLOAU 6"Ø WATERLINE REPLACEMENT PROJECT
DRAWING TITLE: SEGMENT 2 START PROFILE & PLAN (STA.0+00 to 5+00)
PROJECT LOCATION: AOLOAU VILLAGE, AMERICAN SAMOA

SCALE: AS SHOWN
PROJECT NO: 1958785
DATE: APR 2024
SIGNATURE:
DATE:
SHEET NO. C17

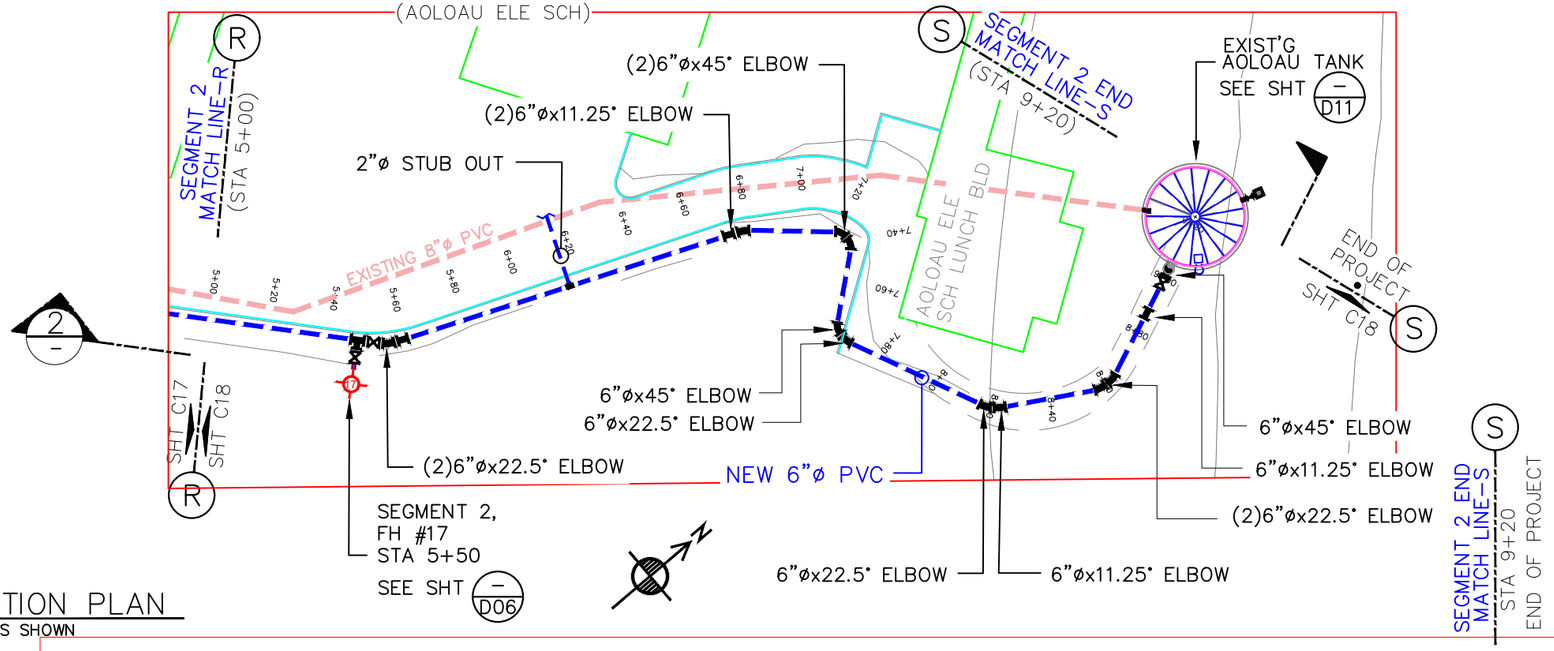

1 LOCATION PLAN
SCALE: AS SHOWN

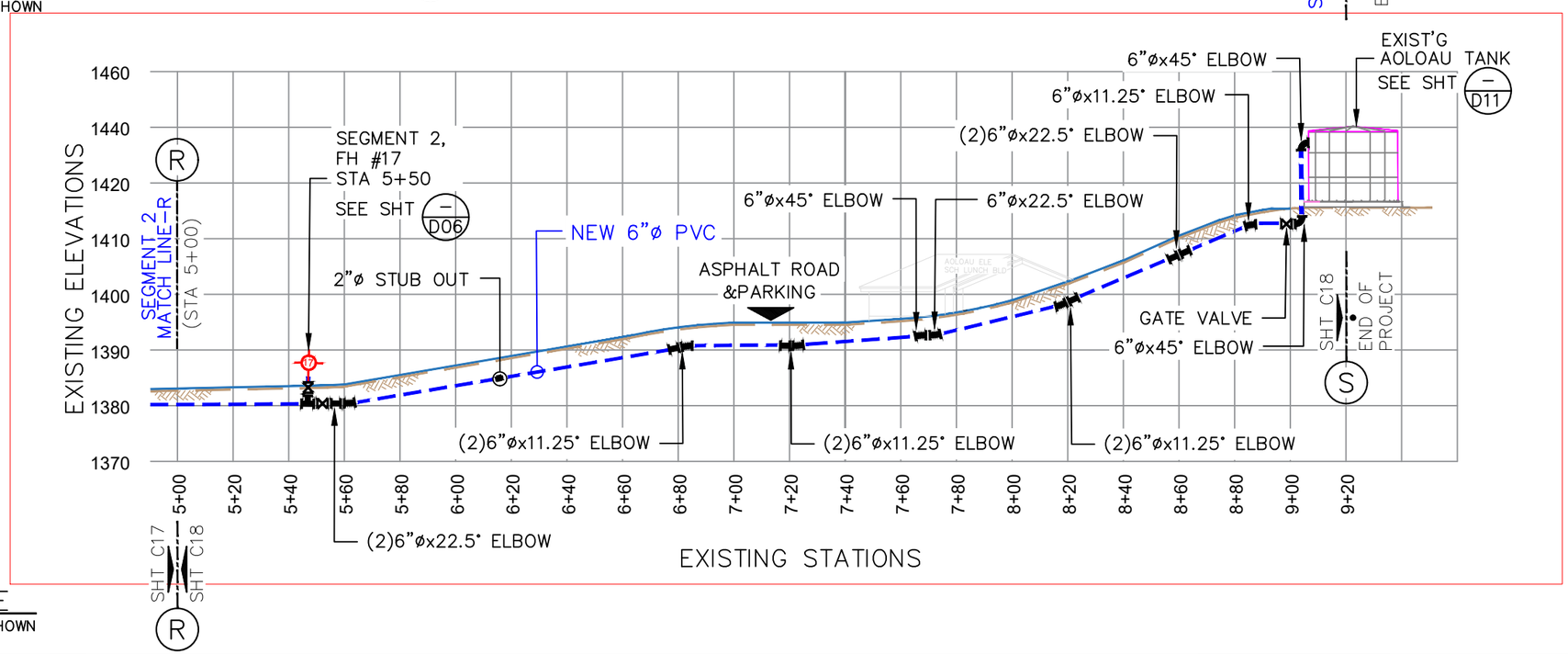

2 PROFILE
SCALE: AS SHOWN

LEGEND:
EXISTING ACP WATER LINE:
NEW 16"ø PVC:
SEWER SERVICE LINE:
EXISTING MAIN SEWER LINE:
EXISTING STORM DRAIN:
TELEPHONE CONDUIT:
ELBOWS: 11.25°= 22.5°= 45°=
FIRE HYDRANT: EXISTING NEW
POWER/TEL POLE: TELEPHONE POLE ELECTRICITY POLE ALL IN 1 POLE
TREES: HEDGES:
SERVICE METER:
GATE VALVE:
STUB-OUT:
AIR RELIEVE VALVE:
BAC-T SAMPLING STN:
PRV / PSV :
ROADS: DIRT ROADS:

GENERAL NOTE:
- CONSTRUCTION CONTRACTOR SHALL FIELD VERIFY ALL EXISTING UNDERGROUND INFRASTRUCTURE TO ENSURE SAFETY OF ITS WORKERS.
- AVOID ANY DAMAGES TO EXISTING GOVERNMENT UTILITIES.
- INSTALL 16"øX16"øX6:ø SADDLE FOR FIRE HYDRANT CONNECTION. (OR SIMILAR CONNECTION)
- INSTALL 2"øx16"ø SADDLE OR SIMILAR CONNECTION FOR NEW SERVICE CONNECTION @ EVERY 500 FEET.

0
SCALE IN FEET
HORIZ. 1": 20'
0 40' 80'
SCALE IN FEET
VERT. 1": 20'

No.	Description	Date

REV. NO.:
REVISION:
CHECKED BY:
APPROVED BY:
DATE:

PREPARED BY: FToala
CHECKED BY: LTyrell
APPROVED BY: FAguila / LTyrell
ISSUE FOR: Construction

ASPA
AMERICAN SAMOA POWER AUTHORITY
AMERICAN SAMOA POWER AUTHORITY
ENGINEERING SERVICES DIVISION
P.O.BOX PPB, TAFUNA, PAGO PAGO, AS 96799

PROJECT NAME: AOLOAU 6"Ø WATERLINE REPLACEMENT PROJECT
DRAWING TITLE: SEGMENT 2 END PROFILE & PLAN (STA.5+00 to 9+20)
PROJECT LOCATION: AOLOAU VILLAGE, AMERICAN SAMOA

SCALE: AS SHOWN
PROJECT NO: 1958785
DATE: JULY 2023

SIGNATURE:
DATE:
SHEET NO. C18

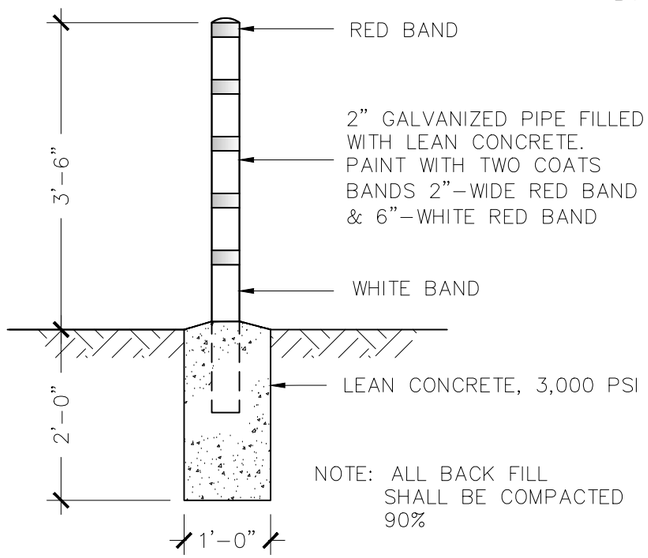

VALVE MARKER DETAIL
SCALE: 1/2" = 1'

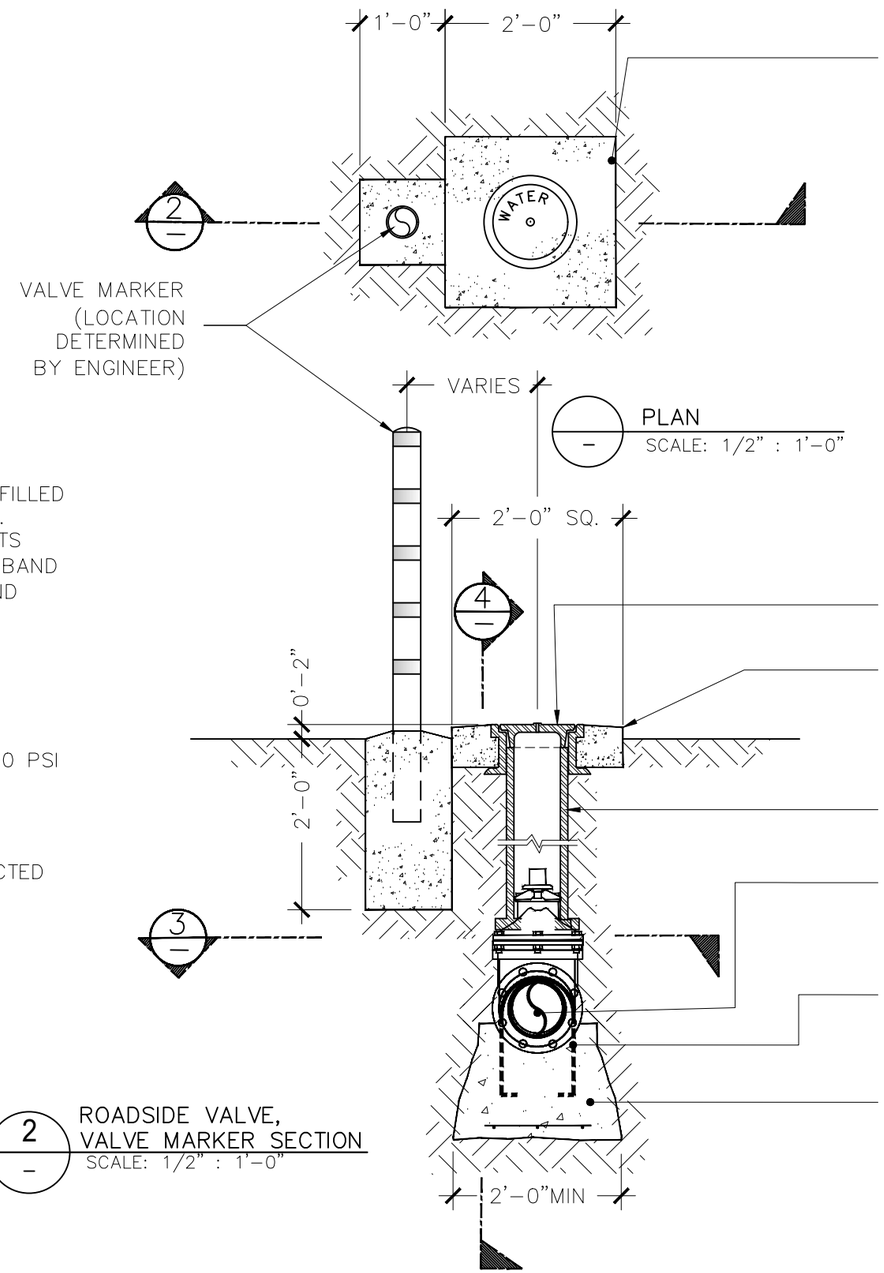

PLAN
SCALE: 1/2" : 1'-0"

ROADSIDE VALVE, VALVE MARKER SECTION
SCALE: 1/2" : 1'-0"

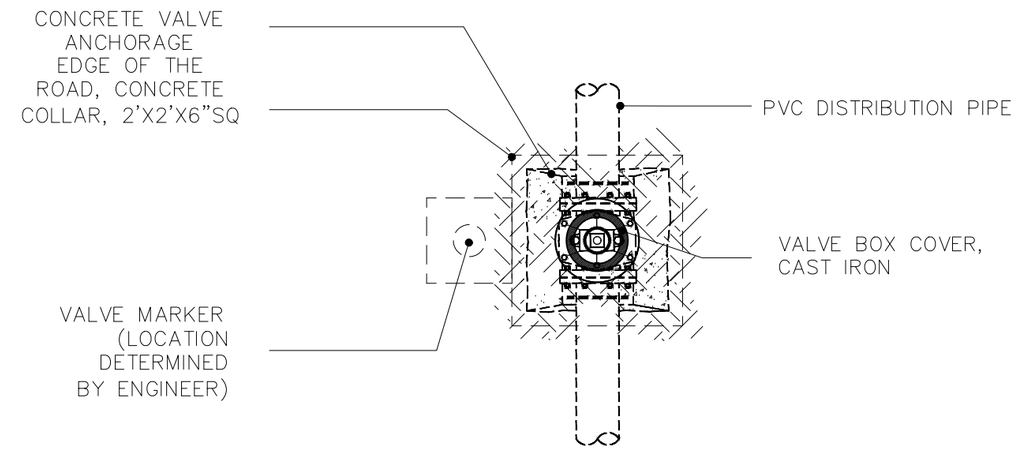

SECTION ON TOP OF VALVE
SCALE: 1/2" : 1'-0"

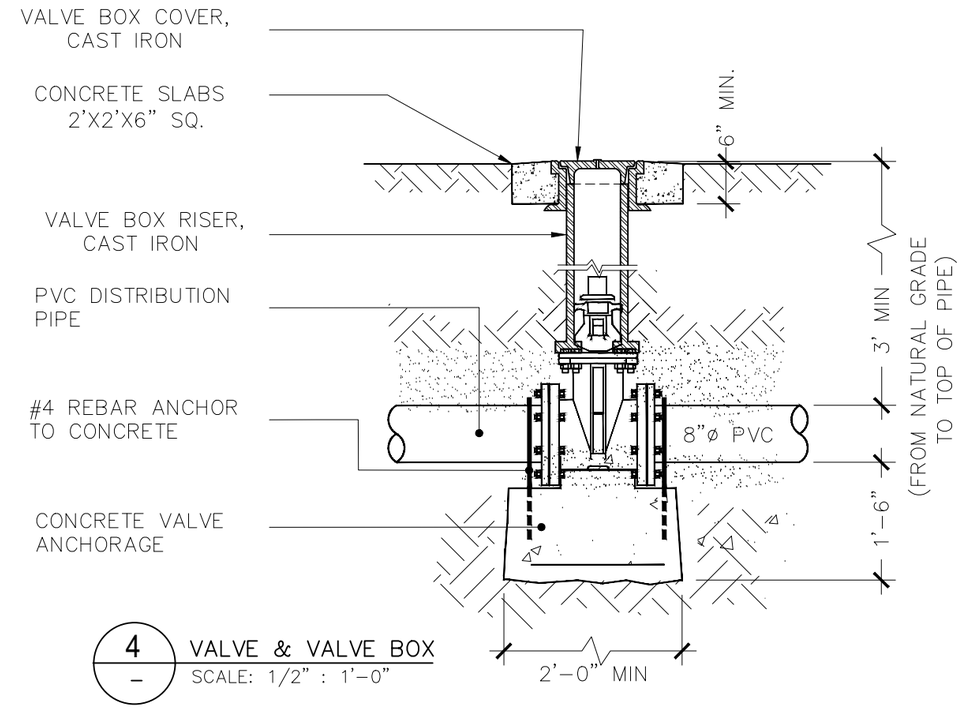

VALVE & VALVE BOX
SCALE: 1/2" : 1'-0"

No.	Description	Date

REV. NO.:
REVISION:
CHECKED BY:
APPROVED BY:
DATE:

DESIGNED BY: FToala
CHECKED BY: LTyrell
APPROVED BY: FAguila / LTyrell
ISSUE FOR: Construction

ASPA
AMERICAN SAMOA POWER AUTHORITY

AMERICAN SAMOA POWER AUTHORITY
ENGINEERING SERVICES DIVISION
P.O.BOX PPB, TAFUNA, PAGO PAGO, AS 96799

PROJECT NAME: AOLOAU 6"Ø WATERLINE REPLACEMENT PROJECT
DRAWING TITLE: GATE VALVE, GATE VALVE BOX DETAILS.
PROJECT LOCATION: AOLOAU VILLAGE, AMERICAN SAMOA

SCALE: AS SHOWN
PROJECT NO: 1958785
DATE: APRIL 2023

SIGNATURE:
DATE:
SHEET NO. D01

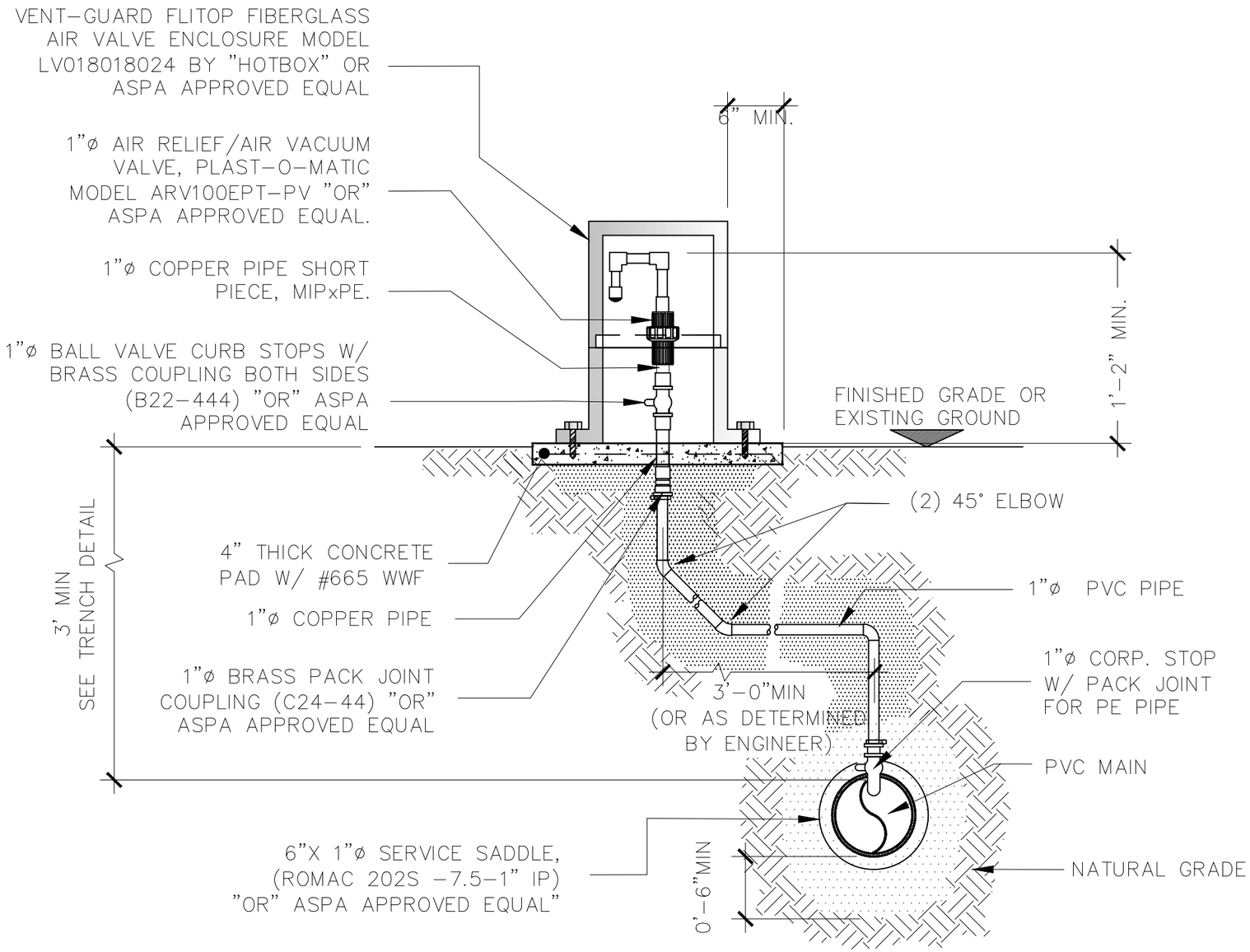

ARV VALVE SECTION DETAILS
SCALE: 3/4" = 1'

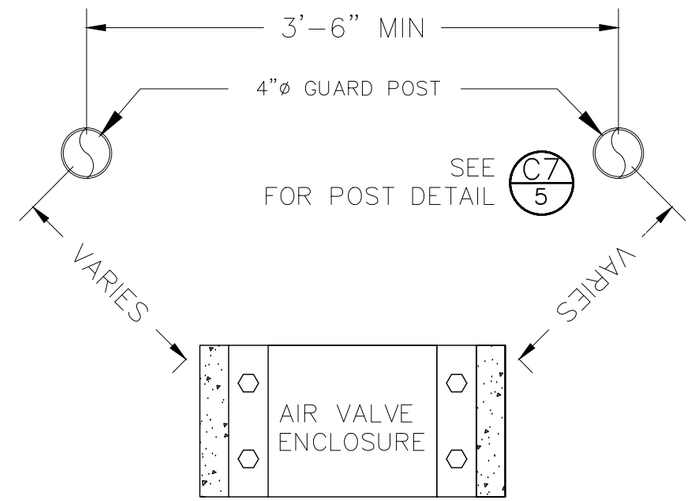

2 PLAN VIEW SHOWING
ARV GUARD POST LOCATION
NOT TO SCALE

NOTE:
GUARD POST LOCATION DETERMINED BY ENGINEER

No.	Description	Date

REV. NO.:
REVISION:
CHECKED BY:
APPROVED BY:
DATE:

DESIGNED BY: FToala
CHECKED BY: LTyrell
APPROVED BY: FAguila / LTyrell
ISSUE FOR: Construction

AMERICAN SAMOA POWER AUTHORITY
ENGINEERING SERVICES DIVISION
P.O.BOX PPB, TAFUNA, PAGO PAGO, AS 96799

PROJECT NAME: AOLOAU 6"Ø WATERLINE REPLACEMENT PROJECT
DRAWING TITLE: AIR RELIEF VALVE & DETAILS
PROJECT LOCATION: AOLOAU VILLAGE, AMERICAN SAMOA

SCALE: AS SHOWN
PROJECT NO: 1958785
DATE: APRIL 2023

SIGNATURE:
DATE:
SHEET NO. D02

GENERAL NOTES:

1. TABLE IS BASED ON 2000#/SQ. FT. SOIL. IF CONDITIONS ARE FOUND TO INDICATE SOIL BEARING IS LESS, THE AREAS SHALL BE INCREASED ACCORDINGLY.
2. AREAS FOR PIPE LARGER THAN 18" SHALL BE CALCULATED.
3. CONCRETE SHALL HAVE A MINIMUM COMPRESSION STRENGTH OF 2500 PSI.
4. THRUST BLOCK IS TO EXTEND TO UNDISTURBED SOIL.
5. SIZE MAY BE DECREASED FOR LESSER DEGREE BENDS AS DETERMINED BY ENGINEER.
6. KEEP CONCRETE CLEAR OF M.J. OR BELL AND SPIGOT JOINTS.
7. BLOCK IN A SIMILAR MANNER AT TEES, HYDRANTS, PLUG OR OTHER LOCATIONS AS REQUIRED.
8. WHEN NECESSARY ADDITIONAL THRUST RESTRAINT METHODS MAY BE USED, SUCH AS MECHANICAL JOINT RESTRAINTS, TIE-RODS (INSTALLED PER MANUFACTURERS' RECOMMENDATIONS) OR OTHER APPROVED METHODS.

CONSTRUCTION KEY NOTES:

A. LENGTH "Y & W" AS REQUIRED TO OBTAIN BEARING AREA AGAINST UNDISTURBED SOIL.

B. ADDITIONAL EXCAVATION IF NECESSARY TO OBTAIN REQUIRED BEARING AREA.

C. MINIMUM THRUST BLOCK AREA REQUIREMENTS FOR (Y & W) AS FOLLOWS:

PIPE SIZE	WATER PIPE	
	TEE, DEAD END 90° BEND	45° AND 22 1/2° BENDS
4" & LESS	3 SQ. FEET	3 SQ. FEET
6"	4 SQ. FEET	3 SQ. FEET
8"	6 SQ. FEET	3 SQ. FEET
10"	9 SQ. FEET	5 SQ. FEET
12"	13 SQ. FEET	7 SQ. FEET
16"	23 SQ. FEET	12 SQ. FEET
18"	29 SQ. FEET	15 SQ. FEET

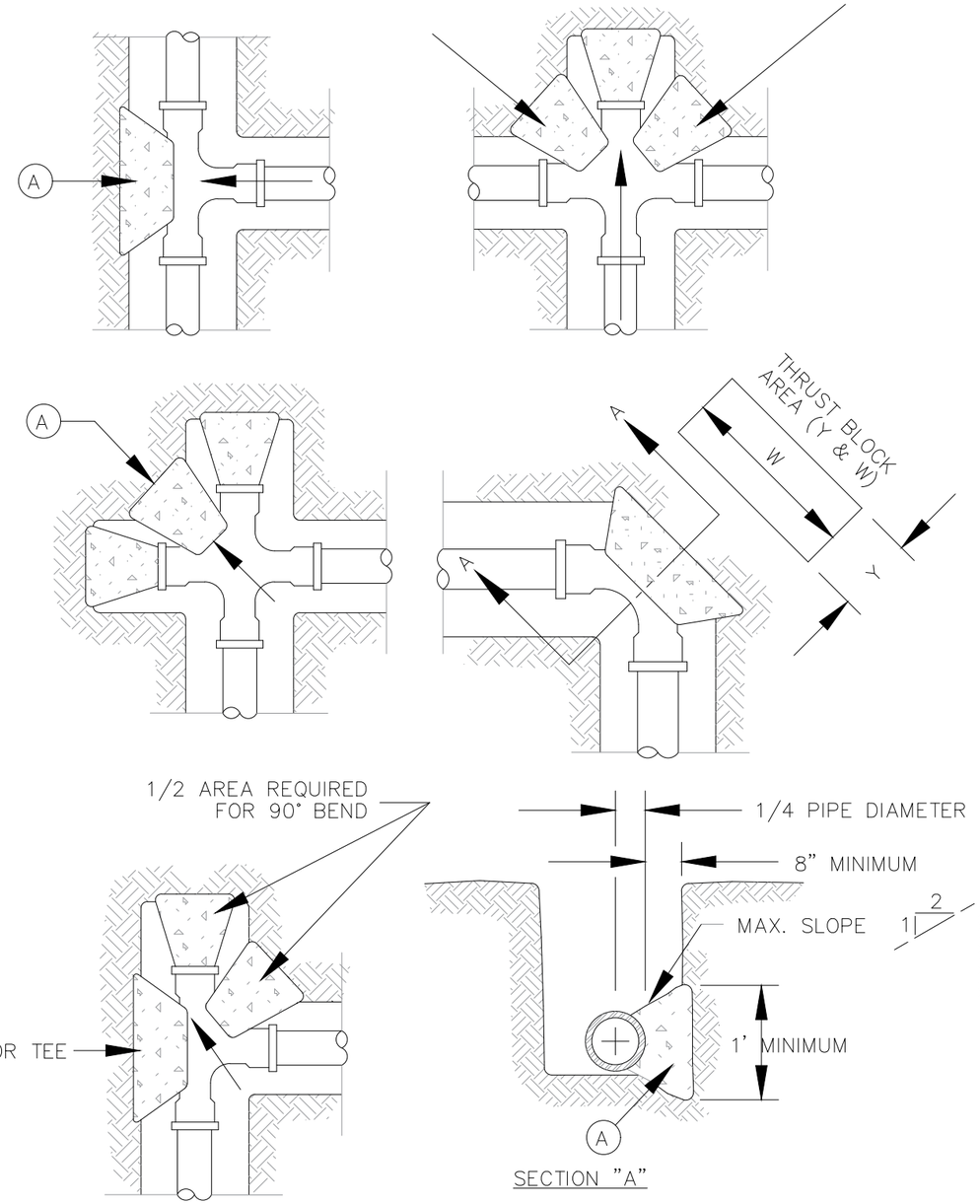

NOTES:

1. ALL ANCHOR RODS ARE TO BE COVERED WITH 80MILS OF BITUMASTIC COMPOUND.
2. WRAP EXTERIOR OF VALVE, ACTUATOR AND REBAR WITH 8 MIL POLYETHYLENE SHEETING AND TAPE.

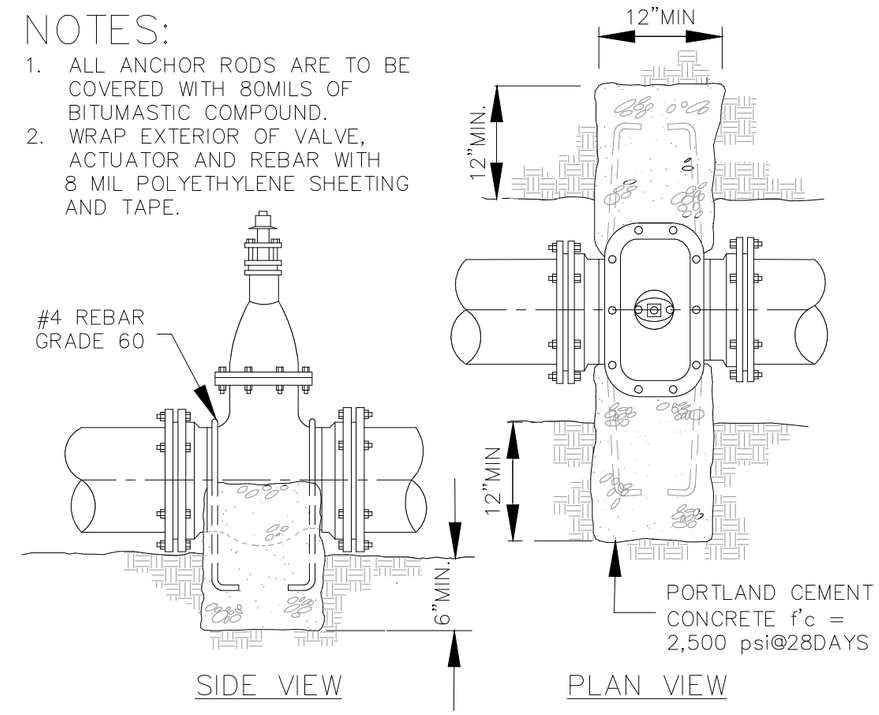

1 TYP. ANCHORING DETAILS

Scale: NTS

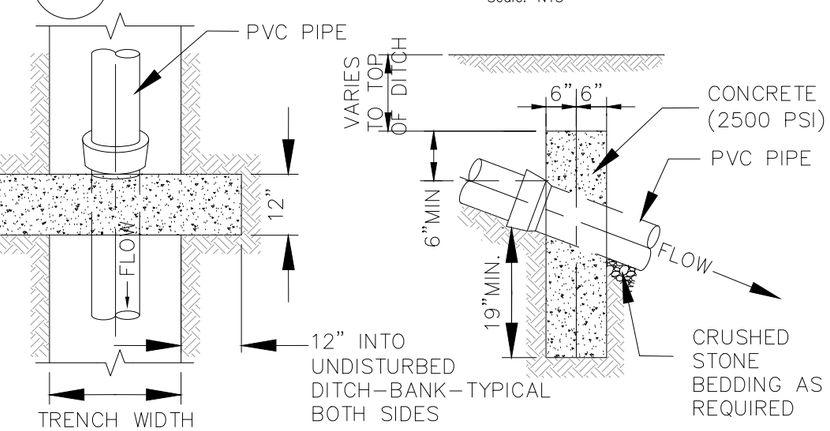

2 ANCHOR ON STEEP SLOPES

Scale: NTS

No.	Description	Date

REV. NO.:

REVISION:

CHECKED BY:

APPROVED BY:

DATE:

DESIGNED BY: FToala

CHECKED BY: LTyrell

APPROVED BY: FAguila / LTyrell

ISSUE FOR: Construction

AMERICAN SAMOA POWER AUTHORITY

ENGINEERING SERVICES DIVISION

P.O.BOX PPB, TAFUNA, PAGO PAGO, AS 96799

PROJECT NAME: AOLOAU 6" Ø WATERLINE REPLACEMENT PROJECT

DRAWING TITLE: CONCRETE THRUST BLOCKING DETAILS

PROJECT LOCATION: AOLOAU VILLAGE, AMERICAN SAMOA

SCALE: AS SHOWN

PROJECT NO: #1958785

DATE: APRIL 2023

SIGNATURE:

DATE:

SHEET NO. D03

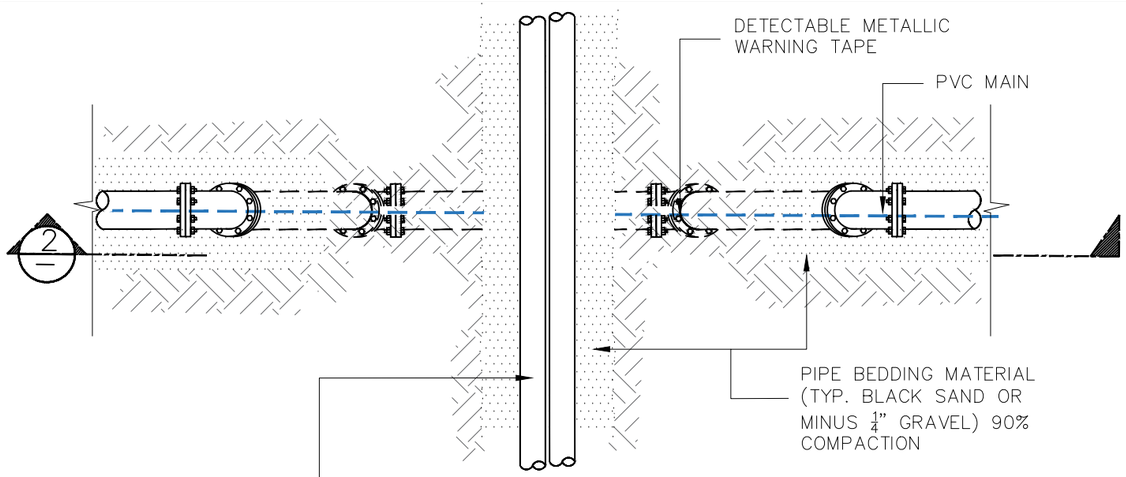

1 PIPE TRENCH PLAN (SECTION ELEVATION)
SCALE: 1/2" = 1'

TRENCH TABLE	
PIPE SIZE	PAYMENT TRENCH
1"	16"
4", 6", 8" OR 10"	24"
12"	30"
16"	34"
20"	38"
24"	42"

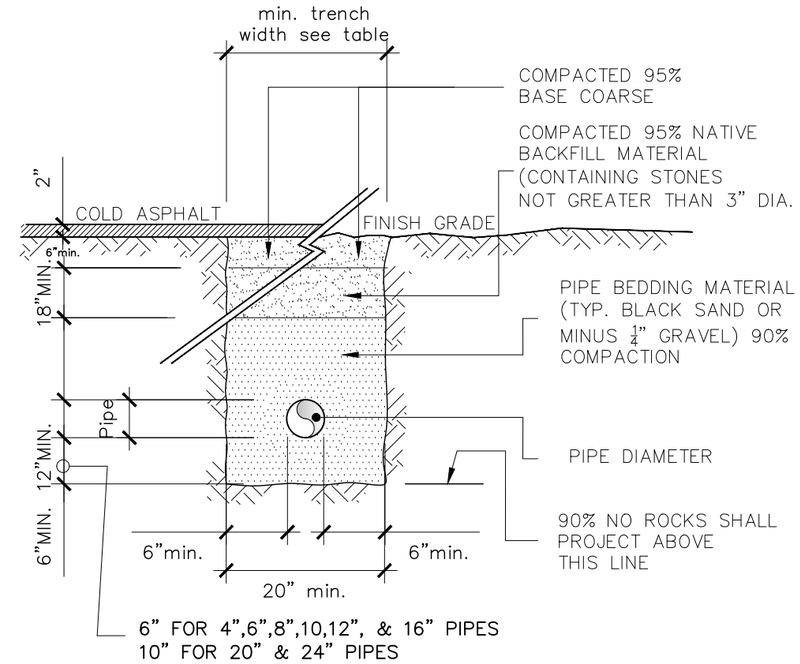

4 TYPICAL TRENCH SECTION
SCALE: 1/2" = 1'

4 INCH TELECOM CONDUIT (SIMILAR DETAILS FOR EXISTING UTILITY CROSSING PIPES UP TO 36")

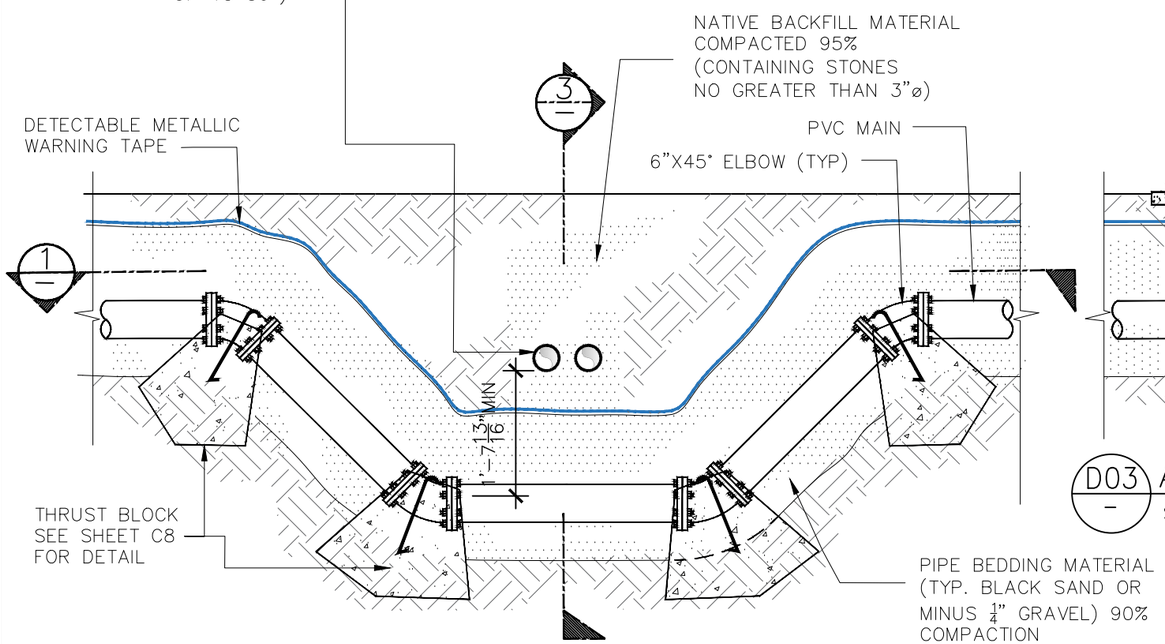

2 TYPICAL UTILITY CROSSING SECTION ELEVATION
SCALE: 1/2" = 1'

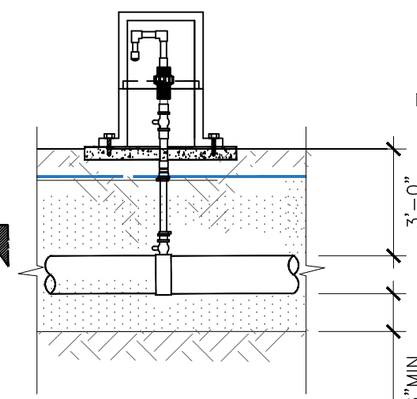

D03 AIR RELIEF VALVE
SCALE: 1/2" = 1'

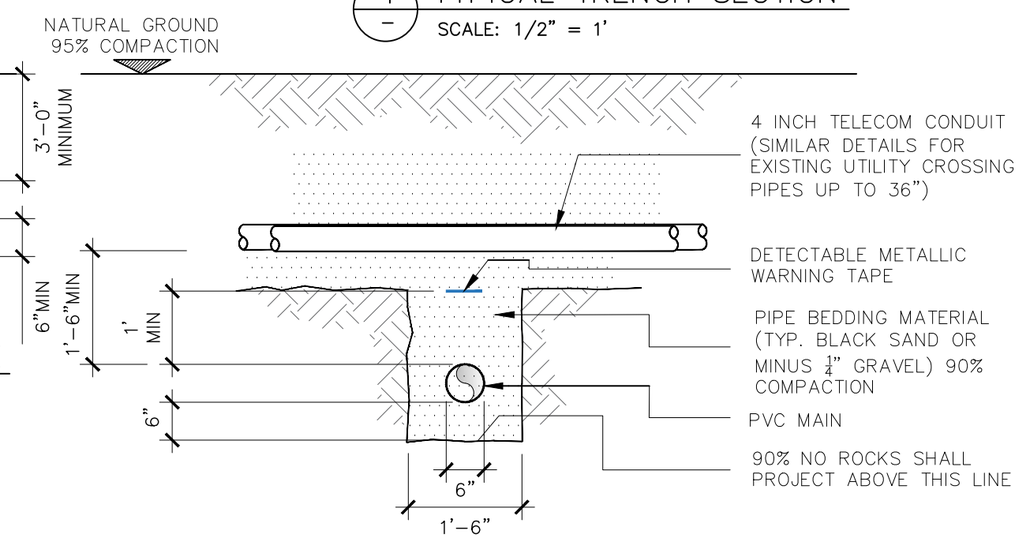

3 TYPICAL UTILITY CROSSING SECTION ELEVATION
SCALE: 1/2" = 1'

No.	Description	Date

REV. NO.:
REVISION:
CHECKED BY:
APPROVED BY:
DATE:

DESIGNED BY: FToala
CHECKED BY: LTyrell
APPROVED BY: FAguila / LTyrell
ISSUE FOR: Construction

AMERICAN SAMOA POWER AUTHORITY
ENGINEERING SERVICES DIVISION
P.O.BOX PPB, TAFUNA, PAGO PAGO, AS 96799

PROJECT NAME: AOLOAU 6"Ø WATERLINE REPLACEMENT PROJECT
DRAWING TITLE: UTILITY CROSSING & TRENCH DETAILS
PROJECT LOCATION: AOLOAU VILLAGE, AMERICAN SAMOA

SCALE: AS SHOWN
PROJECT NO: #1958785
DATE: APRIL 2023

SIGNATURE:
DATE:
SHEET NO. D04

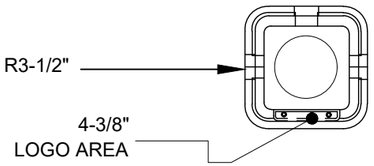

1 PLAN
NOT TO SCALE

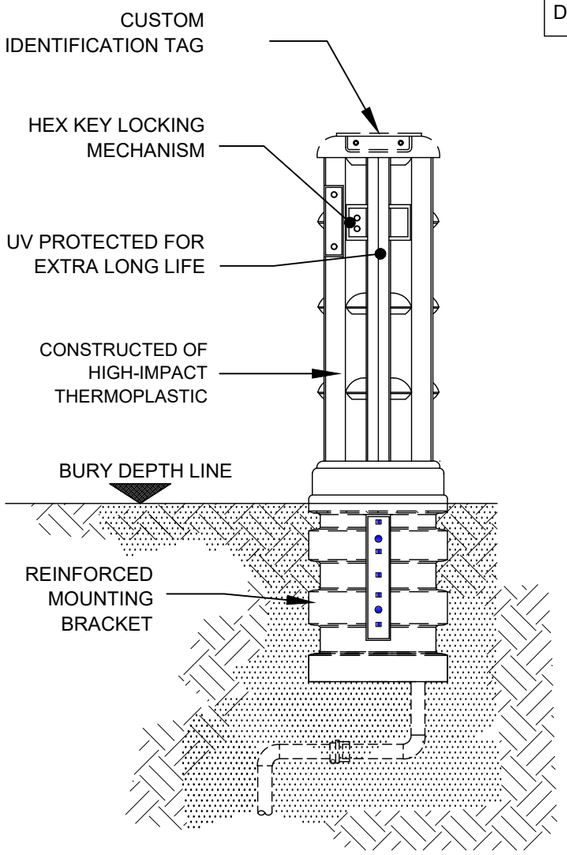

1a SAFETY GUARD BACTERIOLOGICAL SAMPLING STATION ELEVATION
NOT TO SCALE (SEE SUPPLEMENTAL SPECIFICATION)

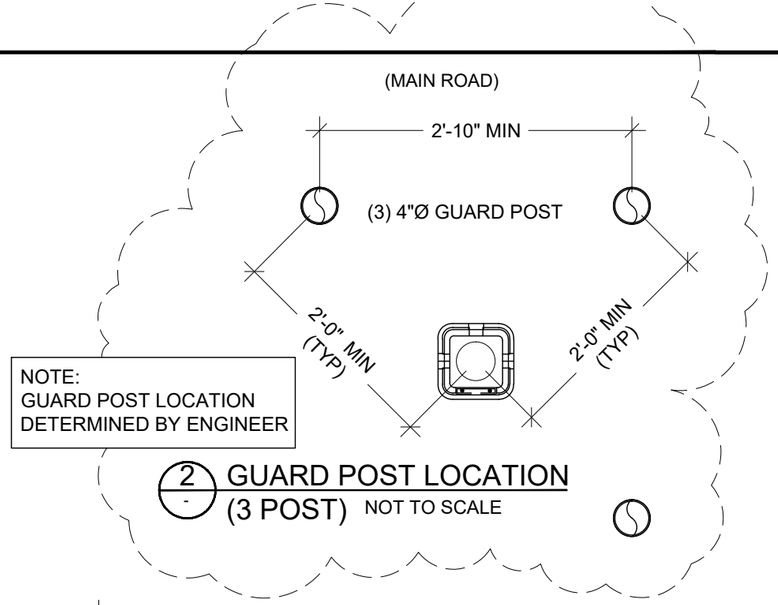

NOTE:
GUARD POST LOCATION
DETERMINED BY ENGINEER

2 GUARD POST LOCATION (3 POST)
NOT TO SCALE

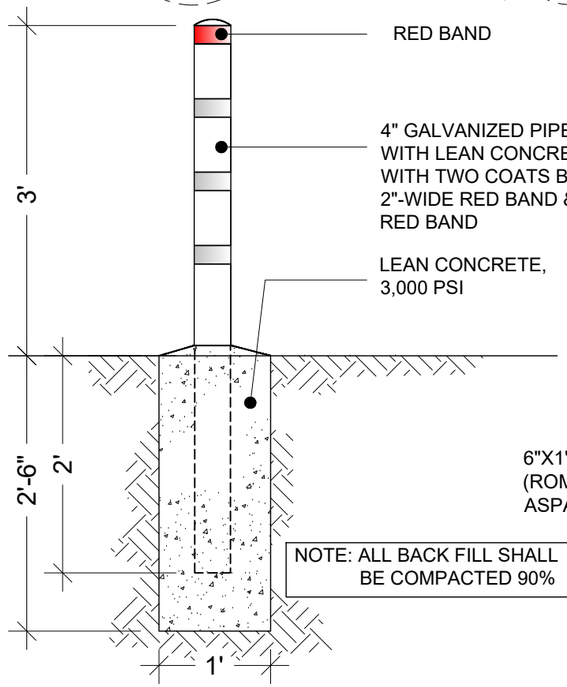

NOTE: ALL BACK FILL SHALL BE COMPACTED 90%

2a GUARD POST FOR BACTERIOLOGICAL SAMPLING STATION, (2 FEET IN FRONT)
NOT TO SCALE (SEE GUARD POST LOCATION ON MAP ABOVE)

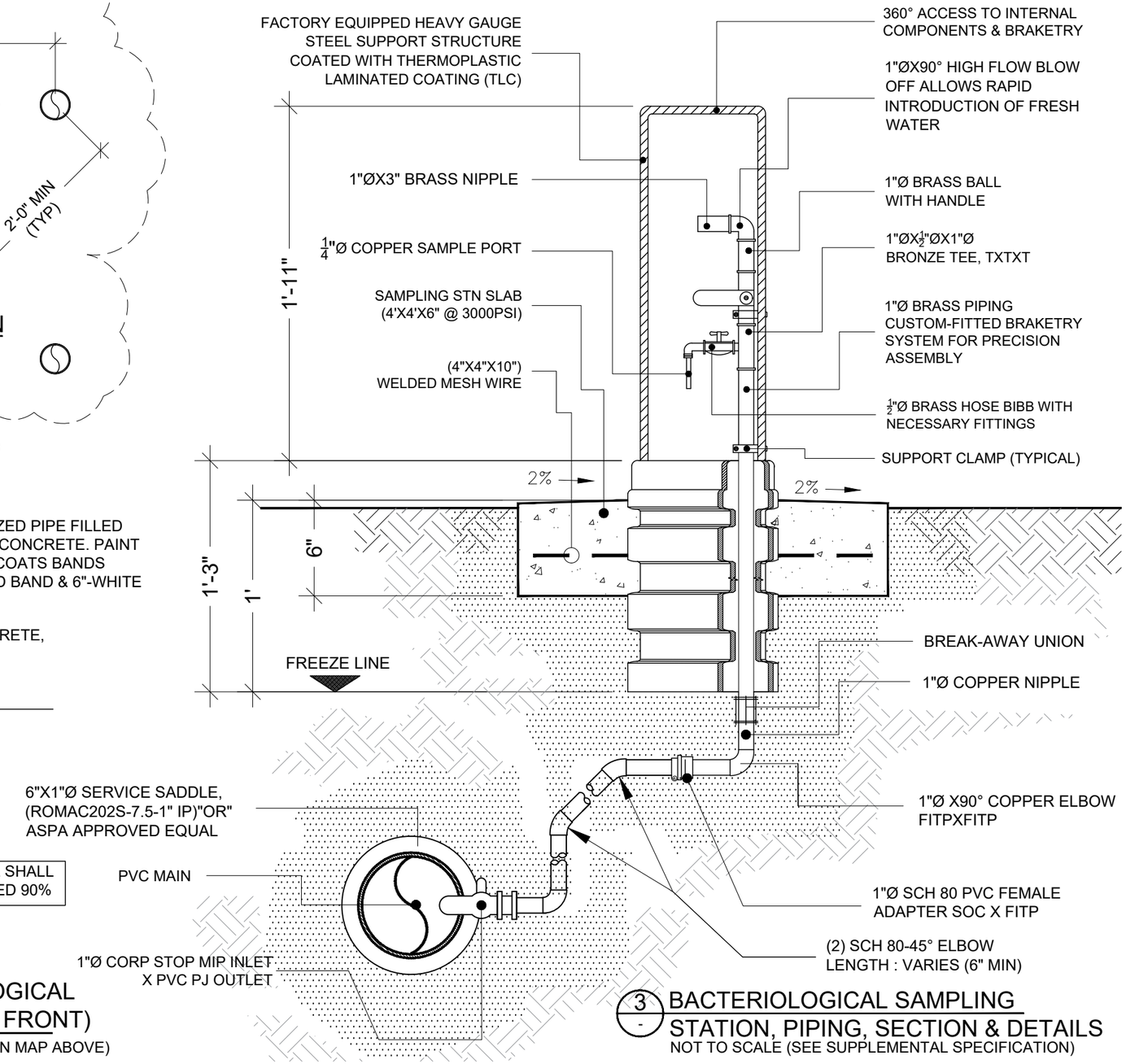

3 BACTERIOLOGICAL SAMPLING STATION, PIPING, SECTION & DETAILS
NOT TO SCALE (SEE SUPPLEMENTAL SPECIFICATION)

No.	Description	Date

REV. NO.:	
REVISION:	
CHECKED BY:	
APPROVED BY:	
DATE:	

DESIGNED BY:	FToala
CHECKED BY:	LTyrell
APPROVED BY:	FAguila / LTyrell
ISSUE FOR:	Construction

ASPA
AMERICAN SAMOA POWER AUTHORITY

AMERICAN SAMOA POWER AUTHORITY
ENGINEERING SERVICES DIVISION
P.O.BOX PPB, TAFUNA, PAGO PAGO, AS 96799

PROJECT NAME:	AOLOAU 6"Ø WATERLINE REPLACEMENT PROJECT
DRAWING TITLE:	BACTERIOLOGICAL SAMPLING STATION & DETAILS
PROJECT LOCATION:	AOLOAU VILLAGE, AMERICAN SAMOA
SCALE:	AS SHOWN
PROJECT NO:	#1958785
DATE:	APRIL 2023
SIGNATURE:	
DATE:	
SHEET NO.	D05

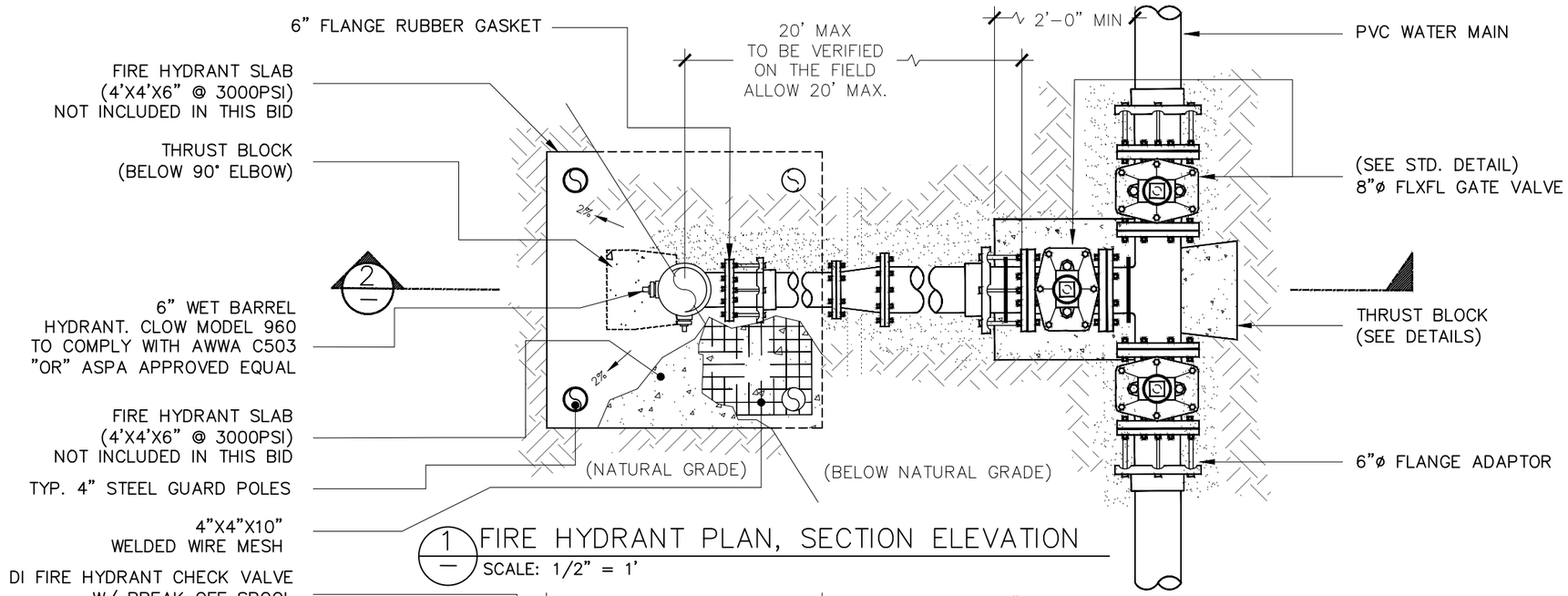

1 FIRE HYDRANT PLAN, SECTION ELEVATION
SCALE: 1/2" = 1'

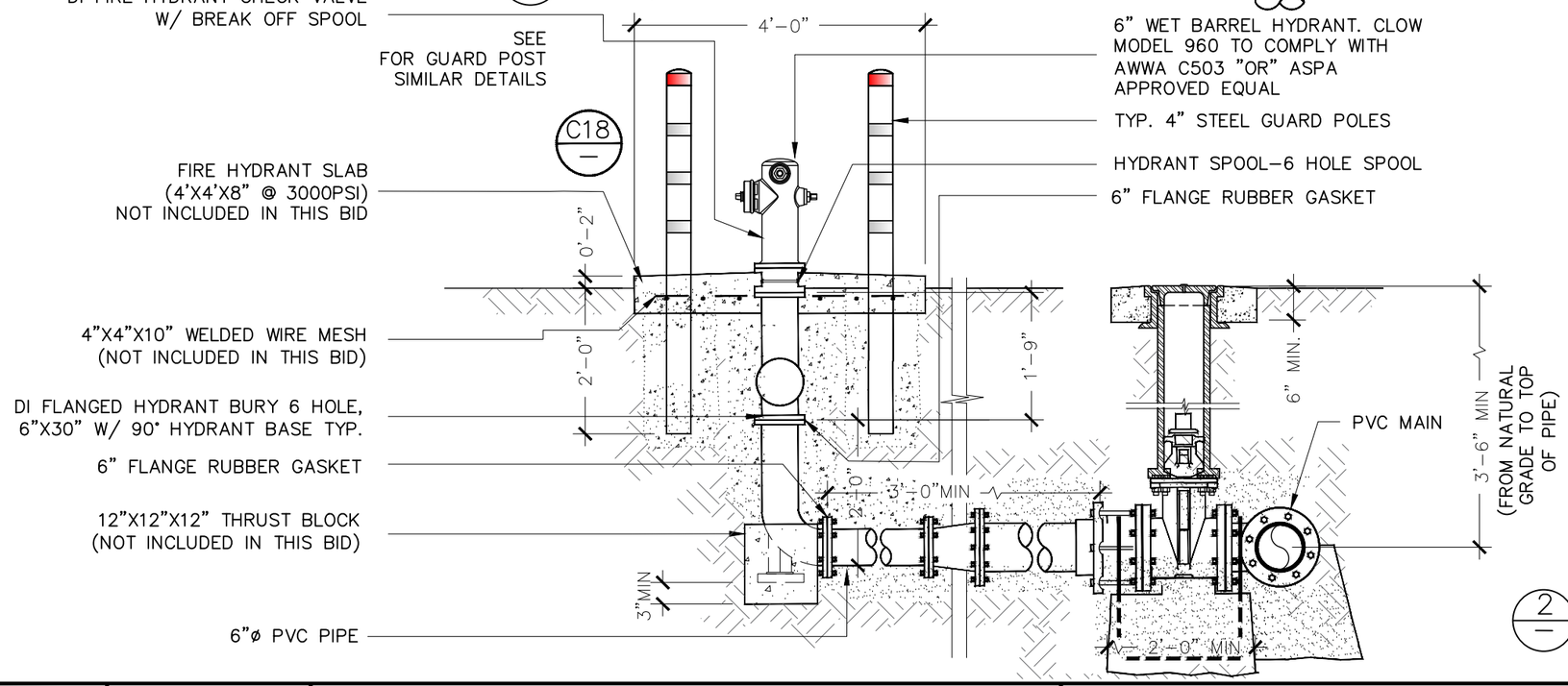

NOTE:
GUARD POST LOCATION
DETERMINED BY ENGINEER

2 FIRE HYDRANT SECTION ELEVATION
SCALE: 1/2" = 1'

No.	Description	Date

REV. NO.:
REVISION:
CHECKED BY:
APPROVED BY:
DATE:

DESIGNED BY: FToala
CHECKED BY: LTyrell
APPROVED BY: FAguila / LTyrell
ISSUE FOR: Construction

AMERICAN SAMOA POWER AUTHORITY
ENGINEERING SERVICES DIVISION
P.O.BOX PPB, TAFUNA, PAGO PAGO, AS 96799

PROJECT NAME: AOLOAU 6"Ø WATERLINE REPLACEMENT PROJECT
DRAWING TITLE: FIRE HYDRANT PIPING & DETAILS
PROJECT LOCATION: AOLOAU VILLAGE, AMERICAN SAMOA

SCALE: AS SHOWN
PROJECT NO: #1958785
DATE: APRIL 2023

SIGNATURE:
DATE:
SHEET NO. D06

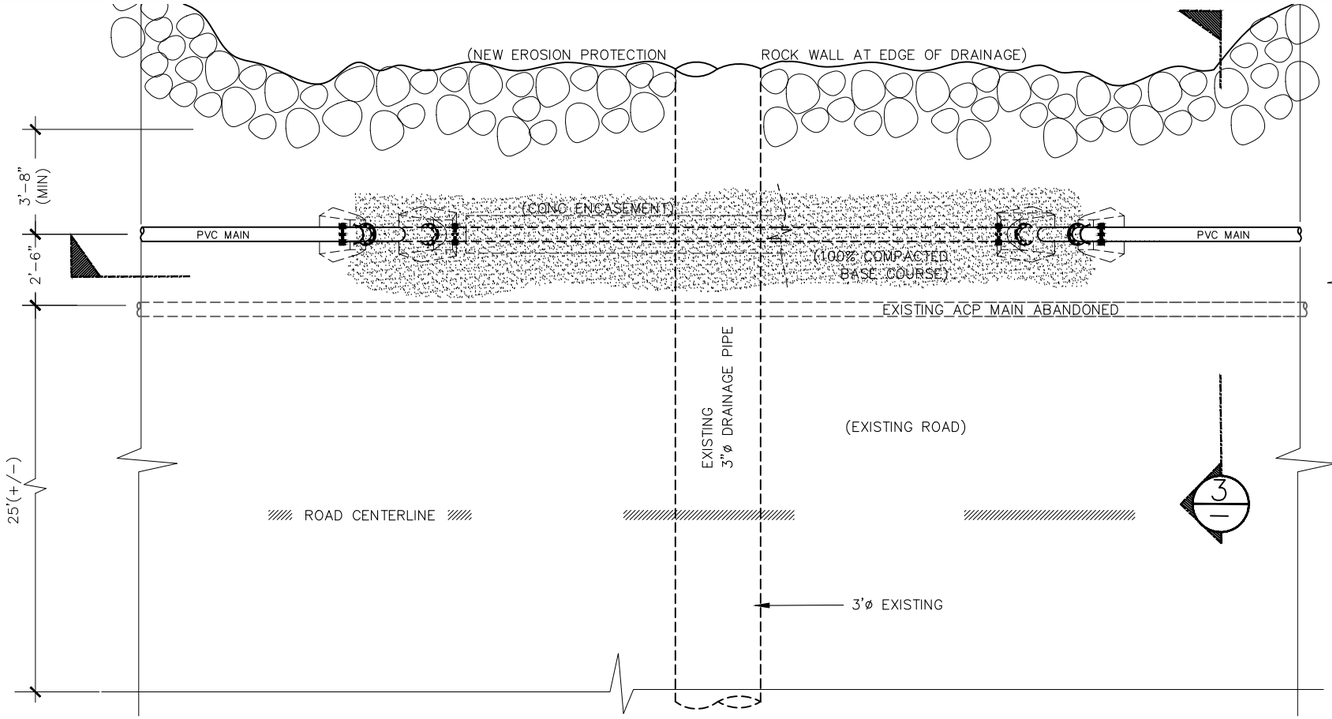

1 PLAN
SCALE: 3/16"-0" = 1'-0"

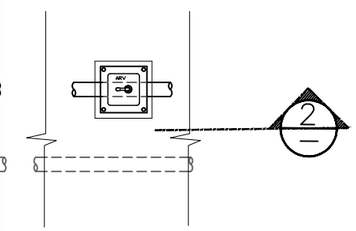

2 ARV VALVE
SCALE: 3/16"=1'-0"

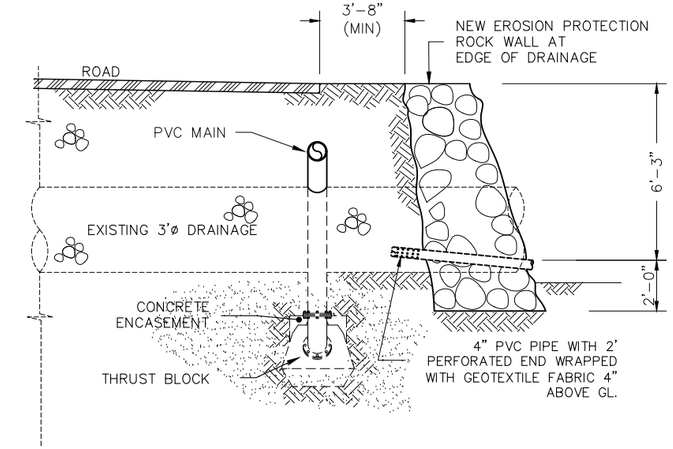

3 ROAD CROSSING (TYPICAL)
SCALE: 3/8"-0" = 1'-0"

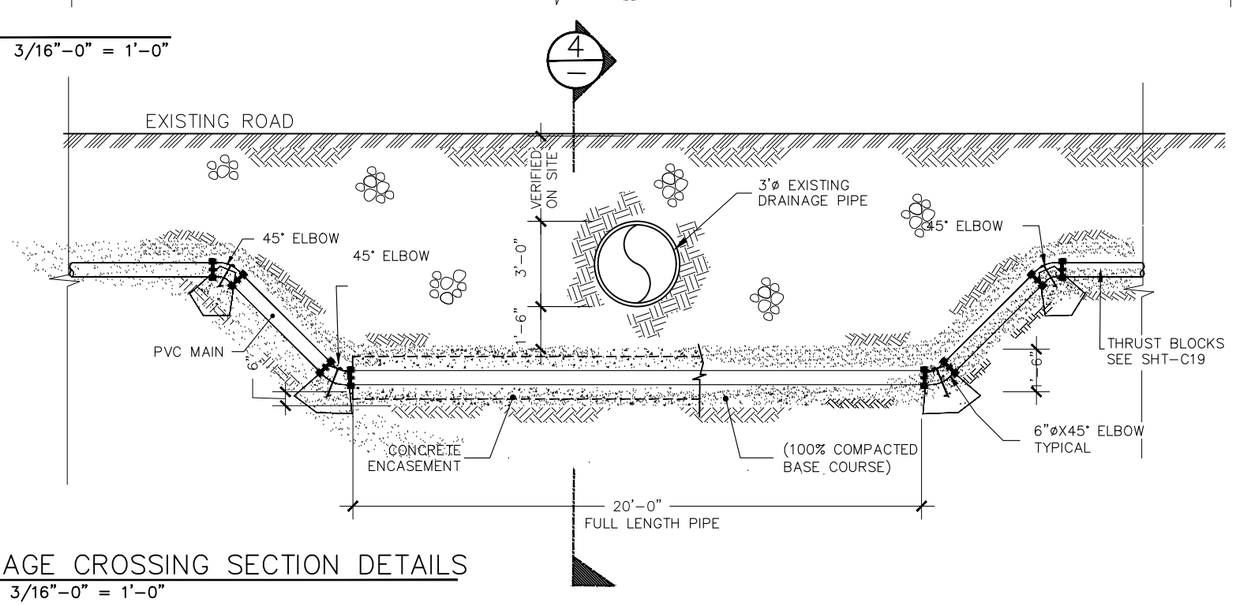

2 DRAINAGE CROSSING SECTION DETAILS
SCALE: 3/16"-0" = 1'-0"

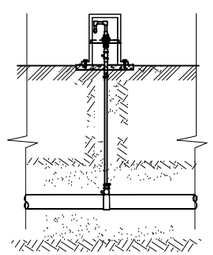

2 ARV VALVE
SCALE: 3/16"=1'-0"

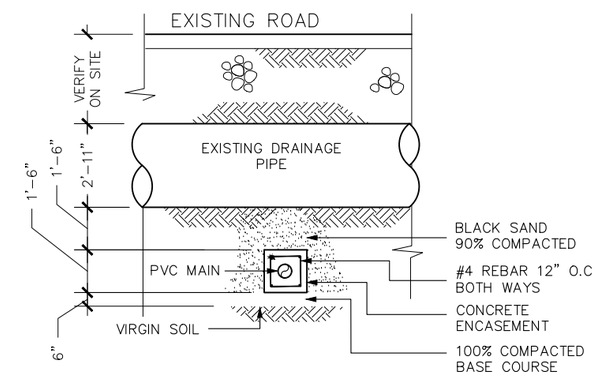

4 DRAINAGE LATITUDE SECTION DETAILS
SCALE: 3/16"-0" = 1'-0"

No.	Description	Date

REV. NO.:
REVISION:
CHECKED BY:
APPROVED BY:
DATE:

DESIGNED BY: FToala
CHECKED BY: LTyrell
APPROVED BY: FAguila / LTyrell
ISSUE FOR: Construction

AMERICAN SAMOA POWER AUTHORITY
ENGINEERING SERVICES DIVISION
P.O.BOX PPB, TAFUNA, PAGO PAGO, AS 96799

PROJECT NAME: AOLOAU 6"Ø WATERLINE REPLACEMENT PROJECT
DRAWING TITLE: TYPICAL MAIN ROAD DRAINAGE CROSSING SECTIONS & DETAILS
PROJECT LOCATION: AOLOAU VILLAGE, AMERICAN SAMOA

SCALE: AS SHOWN
PROJECT NO: #1958785
DATE: APRIL 2023

SIGNATURE:
DATE:
SHEET NO. D07

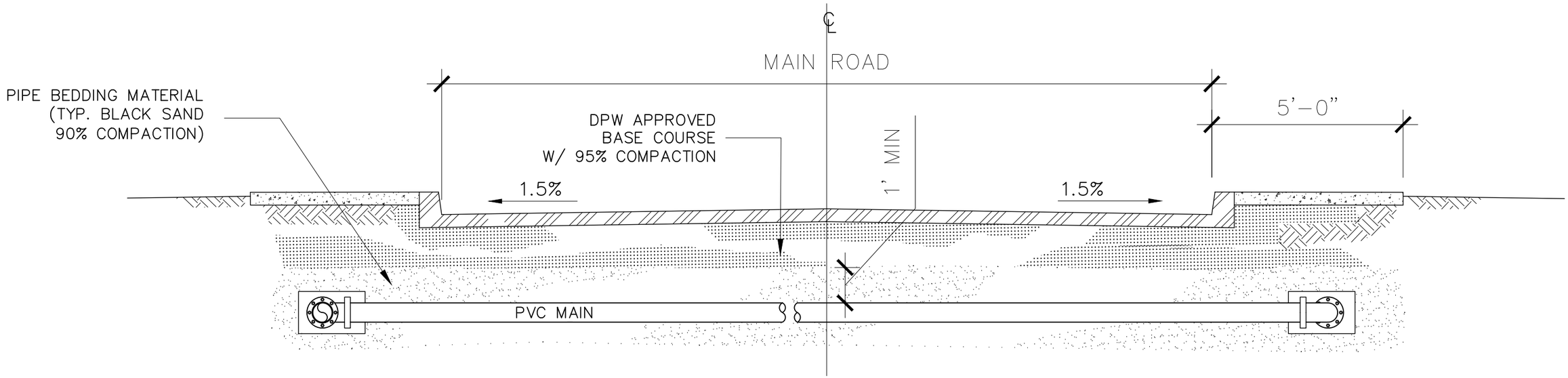

1 — MAIN ROAD CROSSING
SCALE: 3/8"-0" = 1'-0"

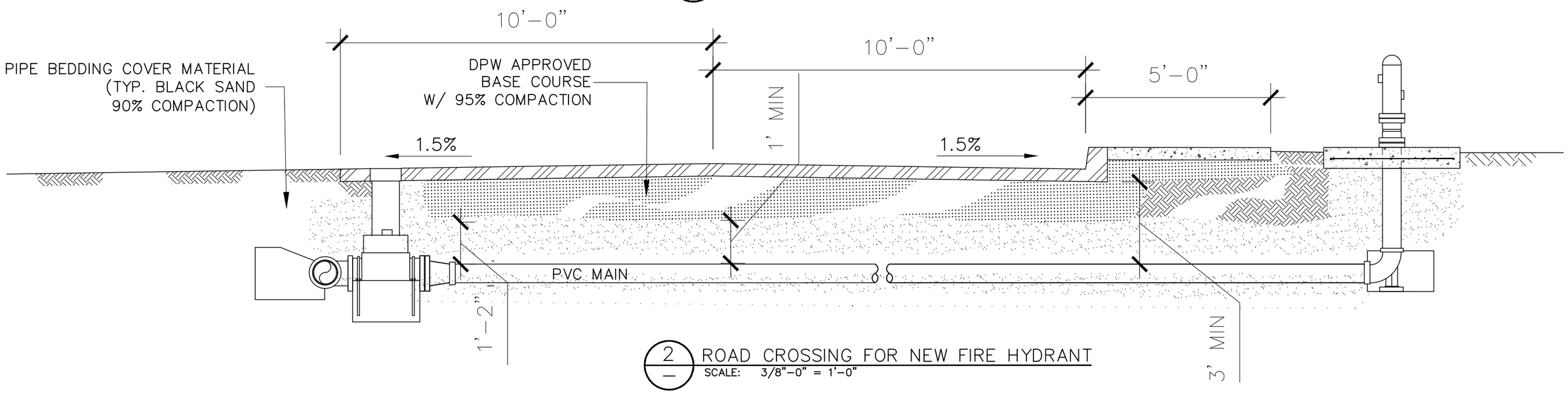

2 — ROAD CROSSING FOR NEW FIRE HYDRANT
SCALE: 3/8"-0" = 1'-0"

No.	Description	Date

REV. NO.:
REVISION:
CHECKED BY:
APPROVED BY:
DATE:

DESIGNED BY: FToala
CHECKED BY: LTyrell
APPROVED BY: FAguila / LTyrell
ISSUE FOR: Construction

AMERICAN SAMOA POWER AUTHORITY
ENGINEERING SERVICES DIVISION
P.O.BOX PPB, TAFUNA, PAGO PAGO, AS 96799

PROJECT NAME: AOLOAU 6"Ø WATERLINE REPLACEMENT PROJECT
DRAWING TITLE: TYPICAL MAIN ROAD CROSSING SECTION & DETAILS FOR NEW FIRE HYDRANT.
PROJECT LOCATION: AOLOAU VILLAGE, AMERICAN SAMOA

SCALE: AS SHOWN
PROJECT NO: #1958785
DATE: APRIL 2023

SIGNATURE:
DATE:
SHEET NO. D08

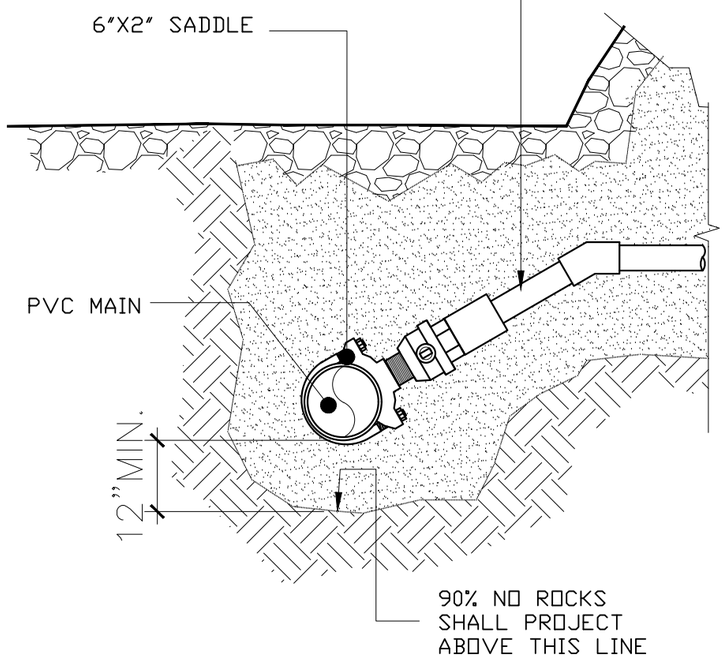

1 - 6"Ø TO 2"Ø CONNECTION (SECTION ELEVATION)
SCALE: 1/2" = 1'

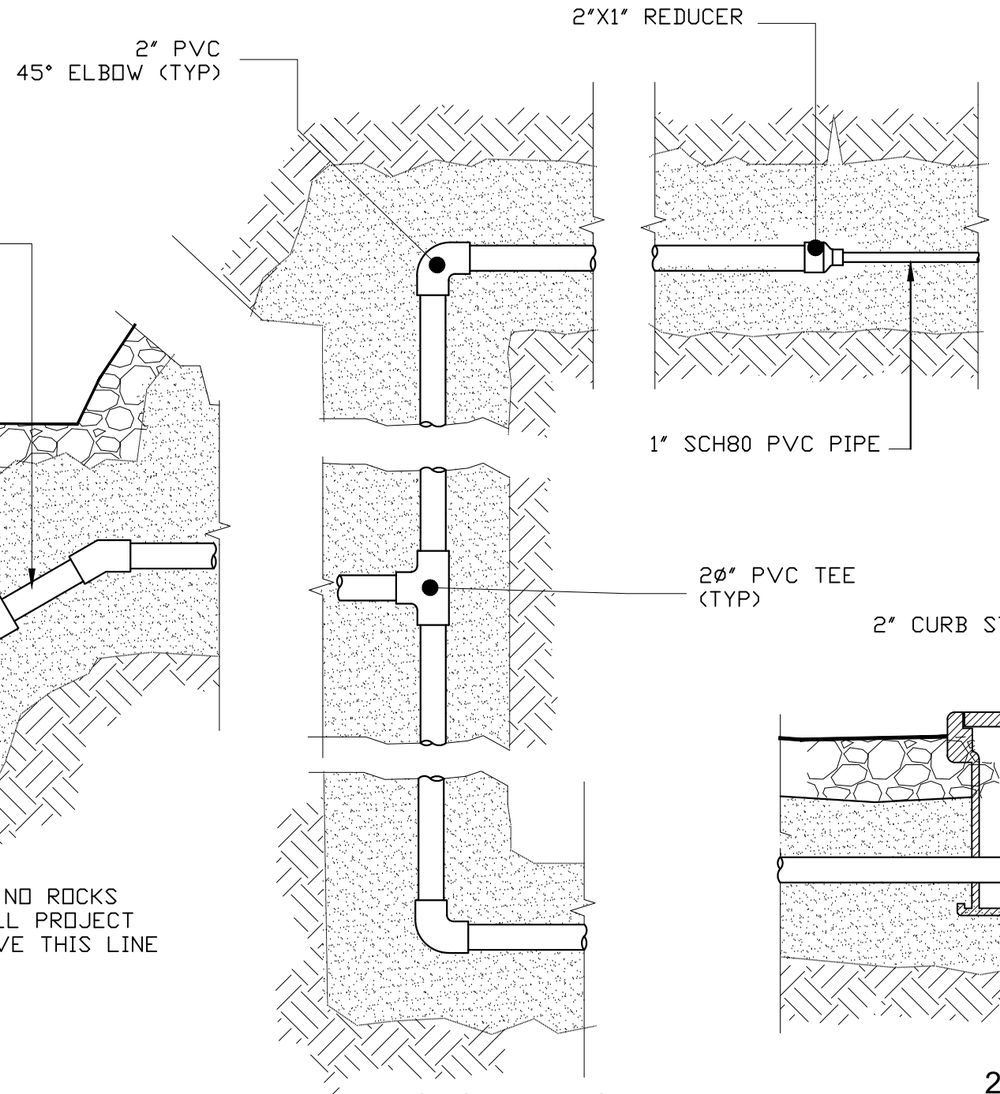

2 - 2" TO 3/4" REDUCER (PLAN ELEVATION)
SCALE: 1/2" = 1'

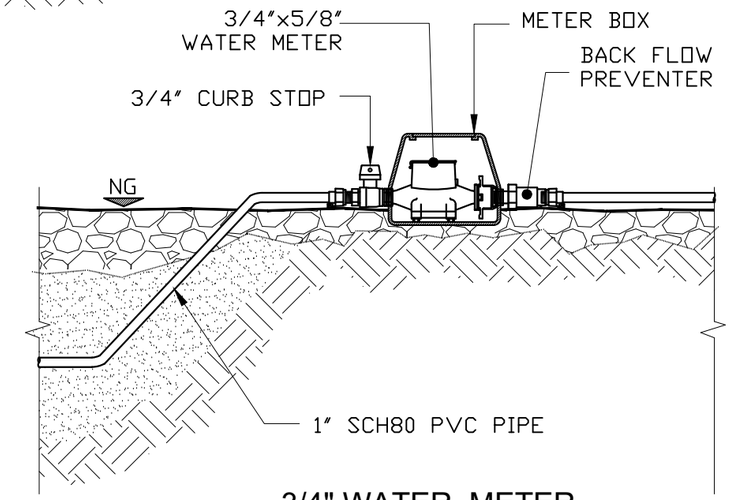

3 - 3/4" WATER METER (SECTION ELEVATION)
SCALE: 1/2" = 1'

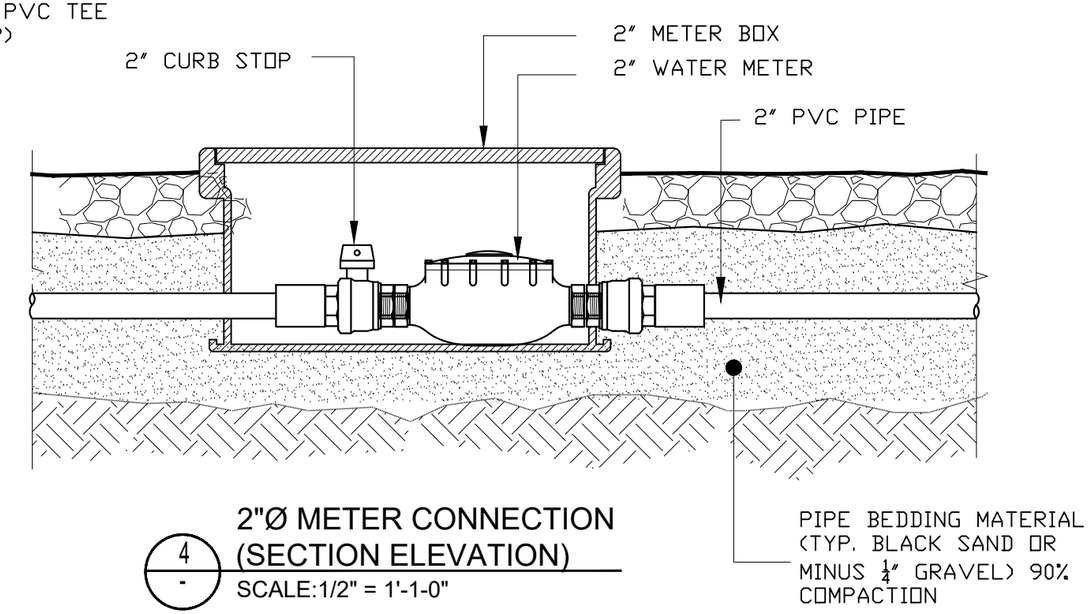

4 - 2"Ø METER CONNECTION (SECTION ELEVATION)
SCALE:1/2" = 1'-1-0"

No.	Description	Date

REV. NO.:
REVISION:
CHECKED BY:
APPROVED BY:
DATE:

DESIGNED BY: FToala
CHECKED BY: LTyrell
APPROVED BY: FAguila / LTyrell
ISSUE FOR: Construction

ASPA
AMERICAN SAMOA POWER AUTHORITY

AMERICAN SAMOA POWER AUTHORITY
ENGINEERING SERVICES DIVISION
P.O.BOX PPB, TAFUNA, PAGO PAGO, AS 96799

PROJECT NAME: AOLOAU 6"Ø WATERLINE REPLACEMENT PROJECT
DRAWING TITLE: TYPICAL PVC PIPE SERVICE LINE LAYOUT & CONNECTION DETAILS
PROJECT LOCATION: AOLOAU VILLAGE, AMERICAN SAMOA

SCALE: AS SHOWN
PROJECT NO: #1958785
DATE: APRIL 2023

SIGNATURE:
DATE:
SHEET NO. D09

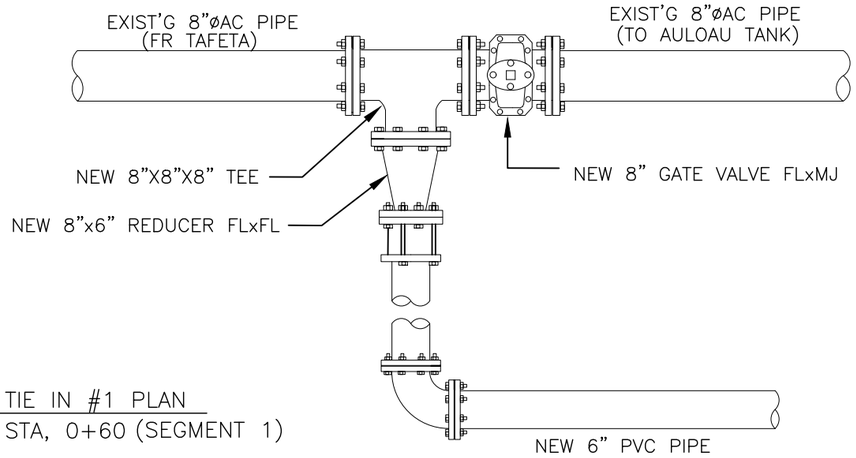

– / C01 TIE IN #1 PLAN
STA, 0+60 (SEGMENT 1)

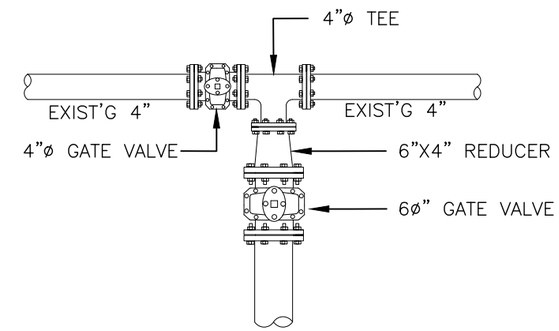

– / C11 TIE IN #4 PLAN
STA, 54+70 (SEGMENT 1)

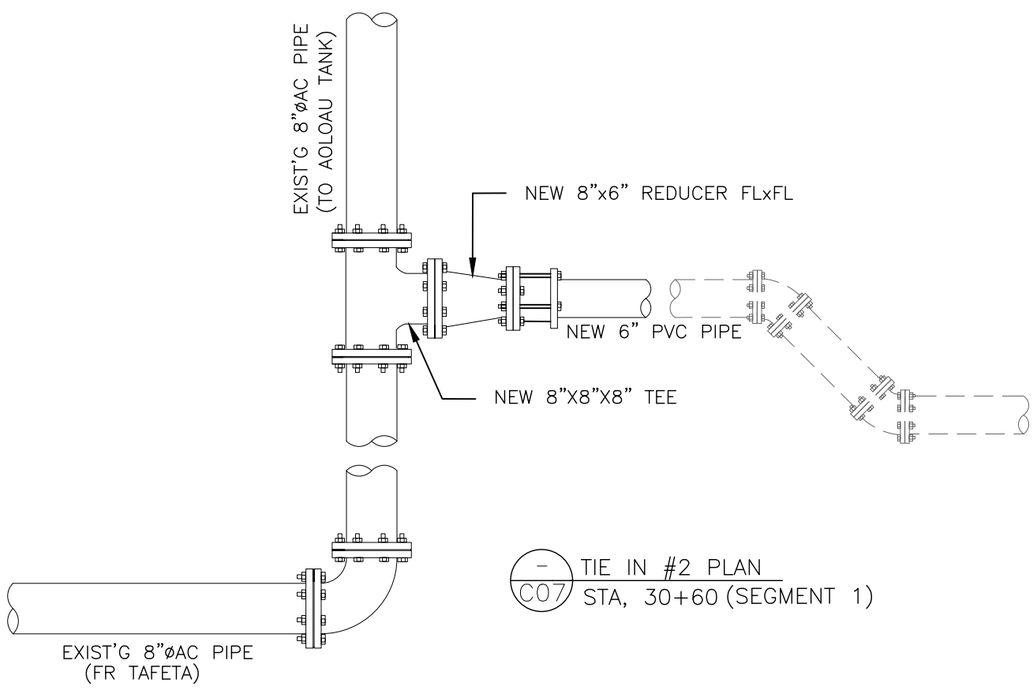

– / C07 TIE IN #2 PLAN
STA, 30+60 (SEGMENT 1)

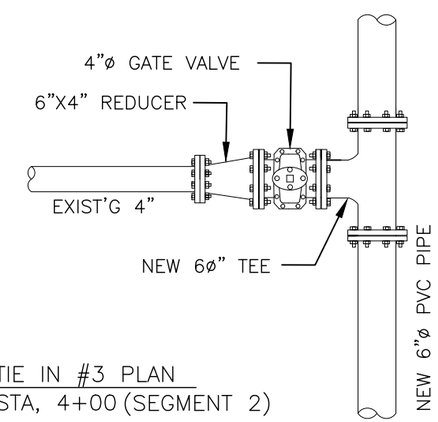

– / C17 TIE IN #3 PLAN
STA, 4+00 (SEGMENT 2)

No.	Description	Date

REV. NO.:
REVISION:
CHECKED BY:
APPROVED BY:
DATE:

DESIGNED BY: FToala
CHECKED BY: LTyrell
APPROVED BY: FAguila / LTyrell
ISSUE FOR: Construction

AMERICAN SAMOA POWER AUTHORITY
ENGINEERING SERVICES DIVISION
P.O.BOX PPB, TAFUNA, PAGO PAGO, AS 96799

PROJECT NAME: AOLOAU 6"Ø WATERLINE REPLACEMENT PROJECT

DRAWING TITLE: TIE-IN TO MAIN WATER SUPPLY WITH WITH ADDITIONAL STANDARD DETAILS.

PROJECT LOCATION: AOLOAU VILLAGE, AMERICAN SAMOA

SCALE: AS SHOWN
PROJECT NO: 1958785
DATE: APRIL 2023

SIGNATURE:
DATE:
SHEET NO. D10

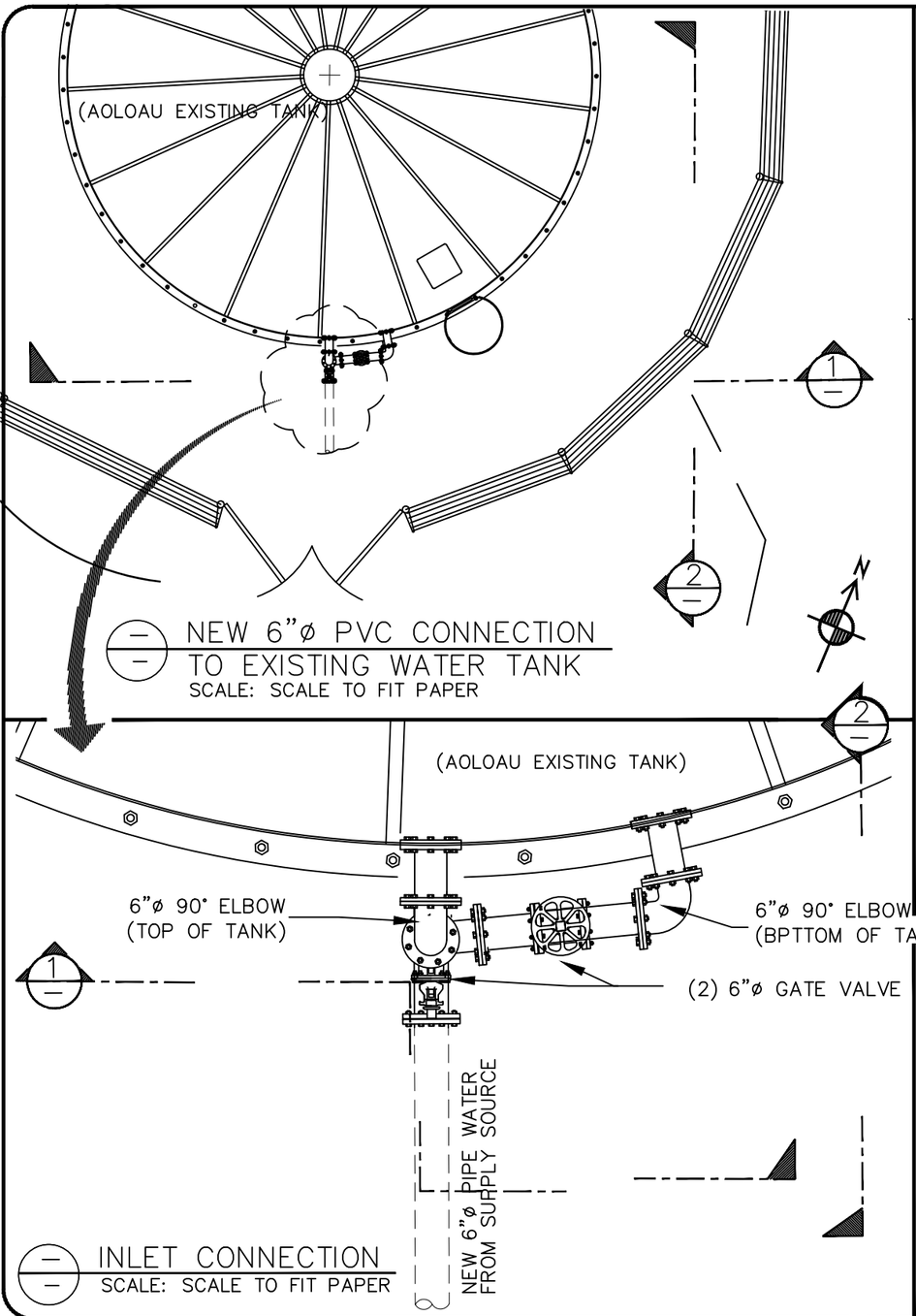

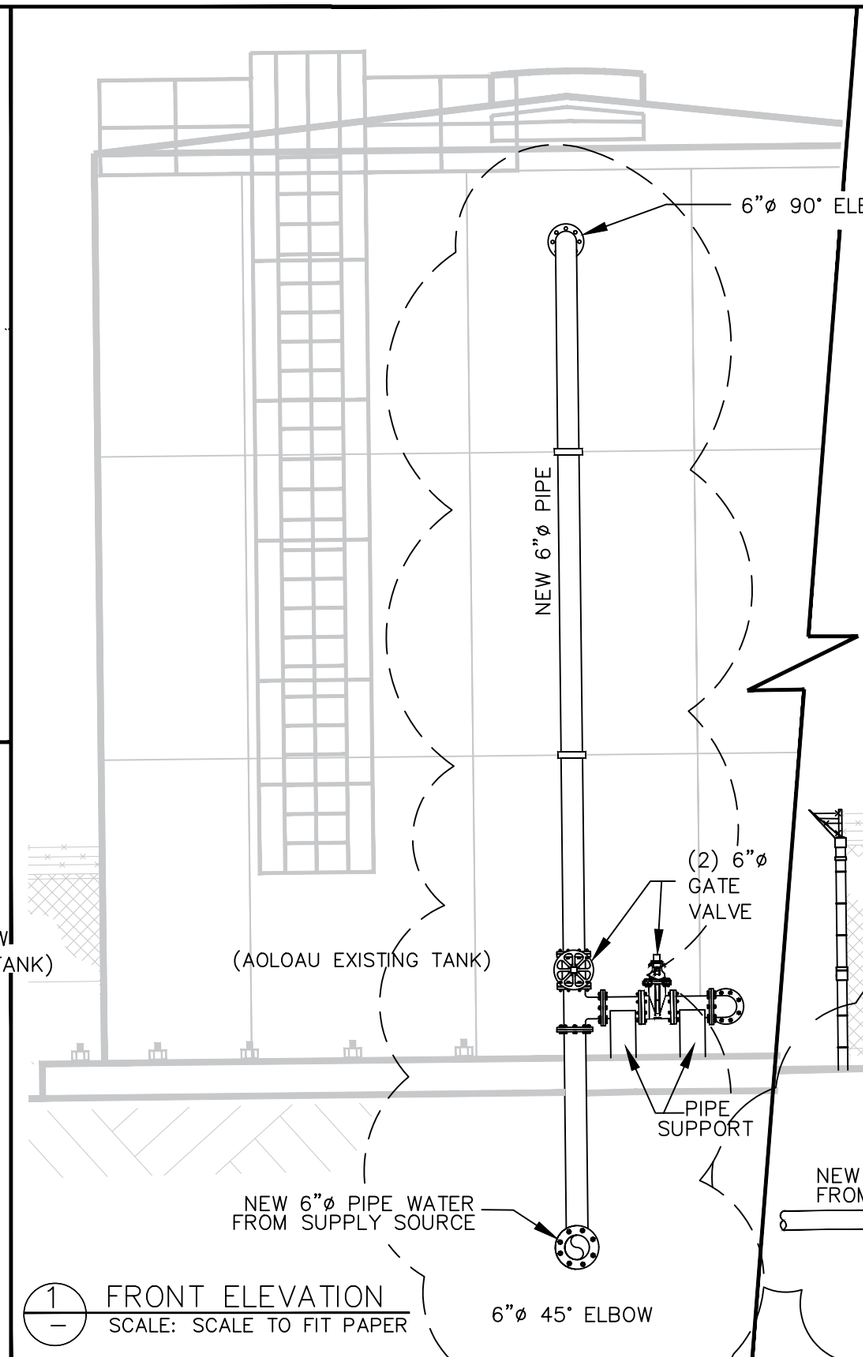

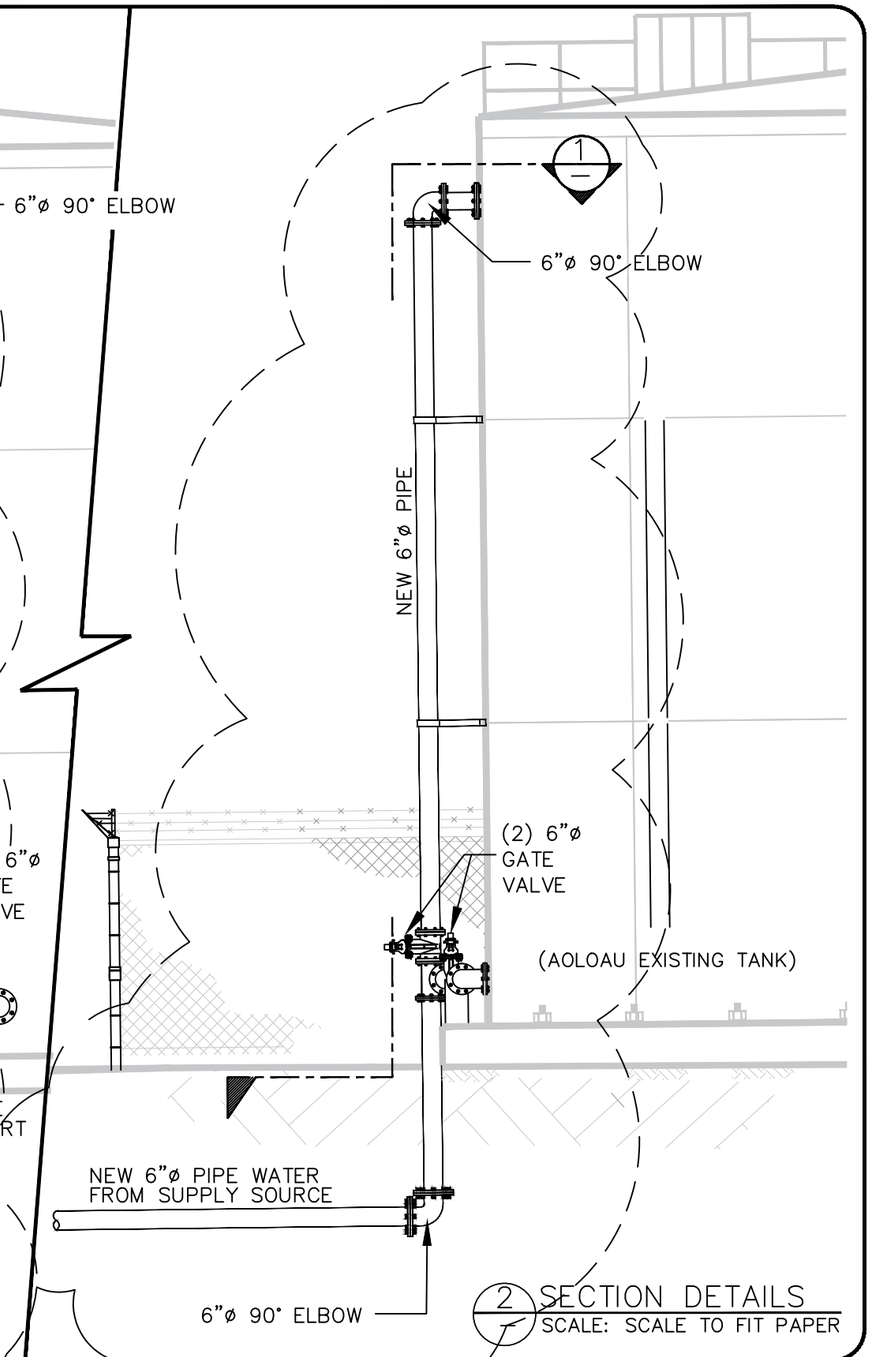

No.	Description	Date

REV. NO.:

REVISION:

CHECKED BY:

APPROVED BY:

DATE:

PREPARED BY: FToala

CHECKED BY: LTyrell

APPROVED BY: FAguila / LTyrell

ISSUE FOR: Construction

AMERICAN SAMOA POWER AUTHORITY

AMERICAN SAMOA POWER AUTHORITY
ENGINEERING SERVICES DIVISION
P.O.BOX PPB, TAFUNA, PAGO PAGO, AS 96799

PROJECT NAME: AOLOAU 6"Ø WATERLINE REPLACEMENT PROJECT

DRAWING TITLE: NEW 6"Ø PVC LINE TO EXISTING TANK PIPE CONNECTION (@ STA. 9+20)

PROJECT LOCATION: AOLOAU VILLAGE, AMERICAN SAMOA

SCALE: AS SHOWN

PROJECT NO: 1958785

DATE: JULY 2024

SIGNATURE:

DATE:

SHEET NO. D11

EROSION AND TEMPORARY DUST CONTROL

1. DURING CONSTRUCTION, PREVENTIVE MAINTENANCE MEASURES SHALL BE USED TO CONTROL FORESEEABLE DUST, EROSION OR SEDIMENTATION PROBLEMS WHICH MAY ARISE AS THE JOB PROGRESSES.
2. FUGITIVE DUST AND SOLID WASTE DISPOSAL DURING GRUBBING ACTIVITIES SHALL MEET REQUIREMENTS OF ADMINISTRATIVE RULES, TITLE II, CHAPTER 60, AIR POLLUTION CONTROL AND CHAPTER 58, SOLID WASTE MANAGEMENT CONTROL.
3. THE CONTRACTOR AT HIS OWN EXPENSE, SHALL KEEP THE PROJECT AREA AND SURROUNDING AREA FREE FROM DUST NUISANCE. THE WORK SHALL BE IN CONFORMANCE WITH THE AIR POLLUTION CONTROL STANDARDS AND REGULATIONS OF THE STATE DEPARTMENT OF HEALTH.
4. WHERE CONSTRUCTION ACTIVITY ON A PORTION OF THE SITE IS TEMPORARILY CEASED, AND EARTH DISTURBING ACTIVITIES WILL BE RESUMED WITHIN 14 DAYS, TEMPORARILY STABILIZATION MEASURES DO NOT HAVE TO BE INITIATED ON THAT PORTION OF THE SITE. ALL EXPOSED AREAS TO BE LEFT EXPOSED FOR LONGER THAN FOURTEEN (14) DAYS SHALL BE HYDROMULCH SEEDED WITH RYE GRASS.
5. ALL SLOPES AND EXPOSED AREAS SHALL BE SODDED OR PLANTED AS SOON AS FINAL GRADES HAVE BEEN ESTABLISHED. PLANTING SHALL NOT BE DELAYED UNTIL ALL GRADING WORKS HAS BEEN COMPLETED. GRADING TO FINAL GRADE SHALL BE CONTINUOUS, AND ANY AREA WITHIN WHICH WORK HAS BEEN INTERRUPTED OR DELAYED SHALL BE PLANTED.

BEST MANAGEMENT PRACTICE NOTES

1. MEASURES TO CONTROL EROSION AND OTHER POLLUTANTS SHALL BE IN PLACE BEFORE ANY WORK IS INITIATED. THESE MEASURES SHALL BE PROPERLY CONSTRUCTED AND MAINTAINED THROUGHOUT THE CONSTRUCTION PERIOD.
2. ALL TEMPORARY EROSION CONTROL MEASURES SHALL BE CHECKED AND REPAIRED AS NECESSARY.
3. GRASSING OR MULCHING OF EXPOSED AREAS TO BE DONE AS FINISH GRADES ARE ESTABLISHED.
4. DIVERSION OF STORM RUNOFF AWAY FROM THE FILL SLOPES UNTIL GRASSING ON THE FILL SLOPES ARE ESTABLISHED.
5. PROVIDE STABILIZED CONSTRUCTION ENTRANCE.

NOTES:

1. STABILIZED CONSTRUCTION ENTRANCE SHALL BE MAINTAINED AT THE EGRESS AND INGRESS TO THE SITE. TIRE WASH MAY BE USED IN LIEU OF STABILIZED CONSTRUCTION ENTRANCE. CONTRACTOR IS RESPONSIBLE TO KEEP ROADWAYS CLEAN FROM SOIL AND CONSTRUCTION DEBRIS.
2. DUST CONTROL SHOULD BE APPLIED TO REDUCE DUST EMISSIONS. WATER THE AREA DURING CONSTRUCTION TO CONTROL DUST.
3. ALL STORM DRAIN INLETS ON SITE AND THOSE OFF SITE WHICH MAY RECEIVE RUN OFF FROM THE SITE SHALL USE AN INLET PROTECTION DEVICE.

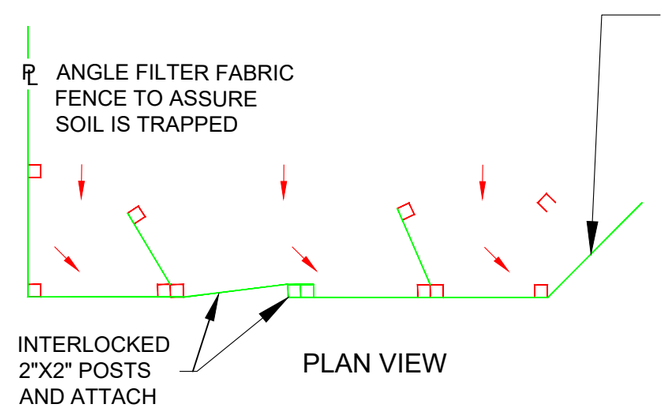

PLAN VIEW

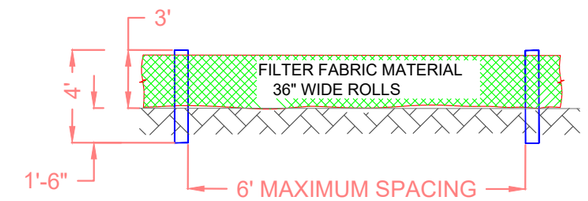

FRONT VIEW

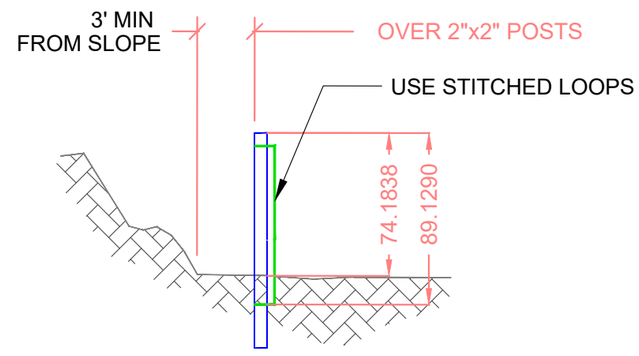

PROFILE

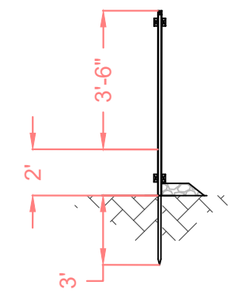

POST SECTION

NOTES:

1. BURY BOTTOM OF FILTER FABRIC 6" VERTICALLY BELOW FINISHED GRADE.
2. 2"X2" FIR, PINE OR STEEL FENCE POSTS.
3. POSTS TO BE INSTALLED ON UPHILL SIDE OF SLOPE.
4. COMPACT BOTH SIDES OF FILTER FABRIC TRENCH.
5. PANELS MUST BE PLACED ACCORDING TO SPACING ON DETAIL NO.940

No.	Description	Date

REV. NO.:
REVISION:
CHECKED BY:
APPROVED BY:
DATE:

PREPARED BY: FToala
CHECKED BY: LTyrell
APPROVED BY: FAguila / LTyrell
ISSUE FOR: Construction

AMERICAN SAMOA POWER AUTHORITY
ENGINEERING SERVICES DIVISION
P.O.BOX PPB, TAFUNA, PAGO PAGO, AS 96799

PROJECT NAME: AOLOAU WATERLINE REPLACEMENT PROJECT
DRAWING TITLE: EROSION AND SEDIMENTATION CONTROL
DRAWING DETAILS: GENERAL NOTES | PROTECTIVE FABRIC DETAILS
PROJECT LOCATION: AOLOAU VILLAGE, AMERICAN SAMOA

SCALE: AS SHOWN
PROJECT NO: 1972803
DATE: APRIL 2023

SIGNATURE:
DATE:
SHEET NO. ESC0

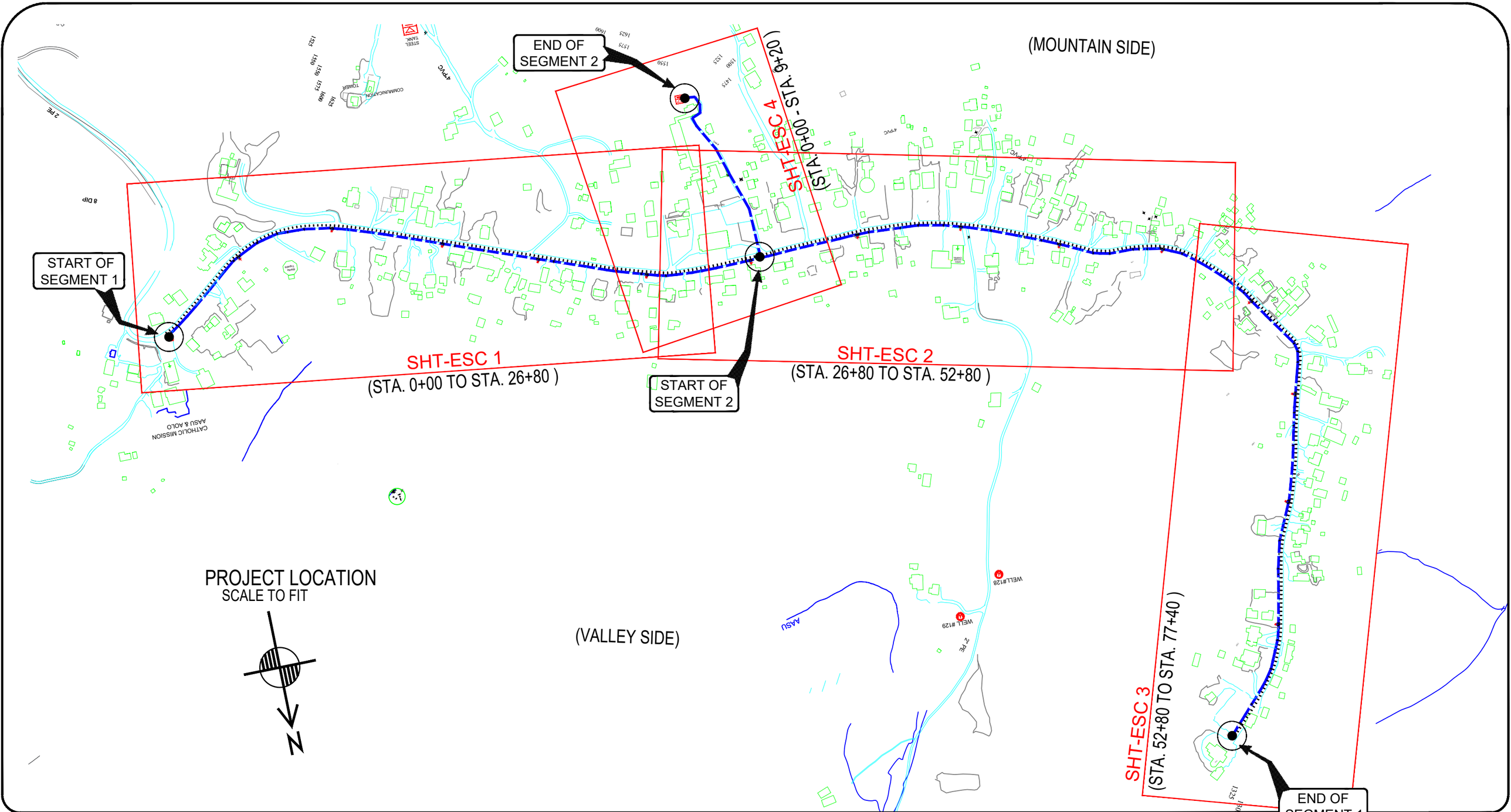

No.	Description	Date

REV. NO.:
REVISION:
CHECKED BY:
APPROVED BY:
DATE:

PREPARED BY: FToala
CHECKED BY: LTyrell
APPROVED BY: FAguila / LTyrell
ISSUE FOR: Construction

AMERICAN SAMOA POWER AUTHORITY
ENGINEERING SERVICES DIVISION
P.O.BOX PPB, TAFUNA, PAGO PAGO, AS 96799

PROJECT NAME: AOLOAU WATERLINE REPLACEMENT PROJECT
DRAWING TITLE: EROSION AND SEDIMENTATION CONTROL
DRAWING DETAILS: VICINITY MAP | SHEETS LOCATIONS
PROJECT LOCATION: AOLOAU VILLAGE, AMERICAN SAMOA

SCALE: AS SHOWN
PROJECT NO: 1972803
DATE: APRIL 2023

SIGNATURE:
DATE:
SHEET NO. ESC1

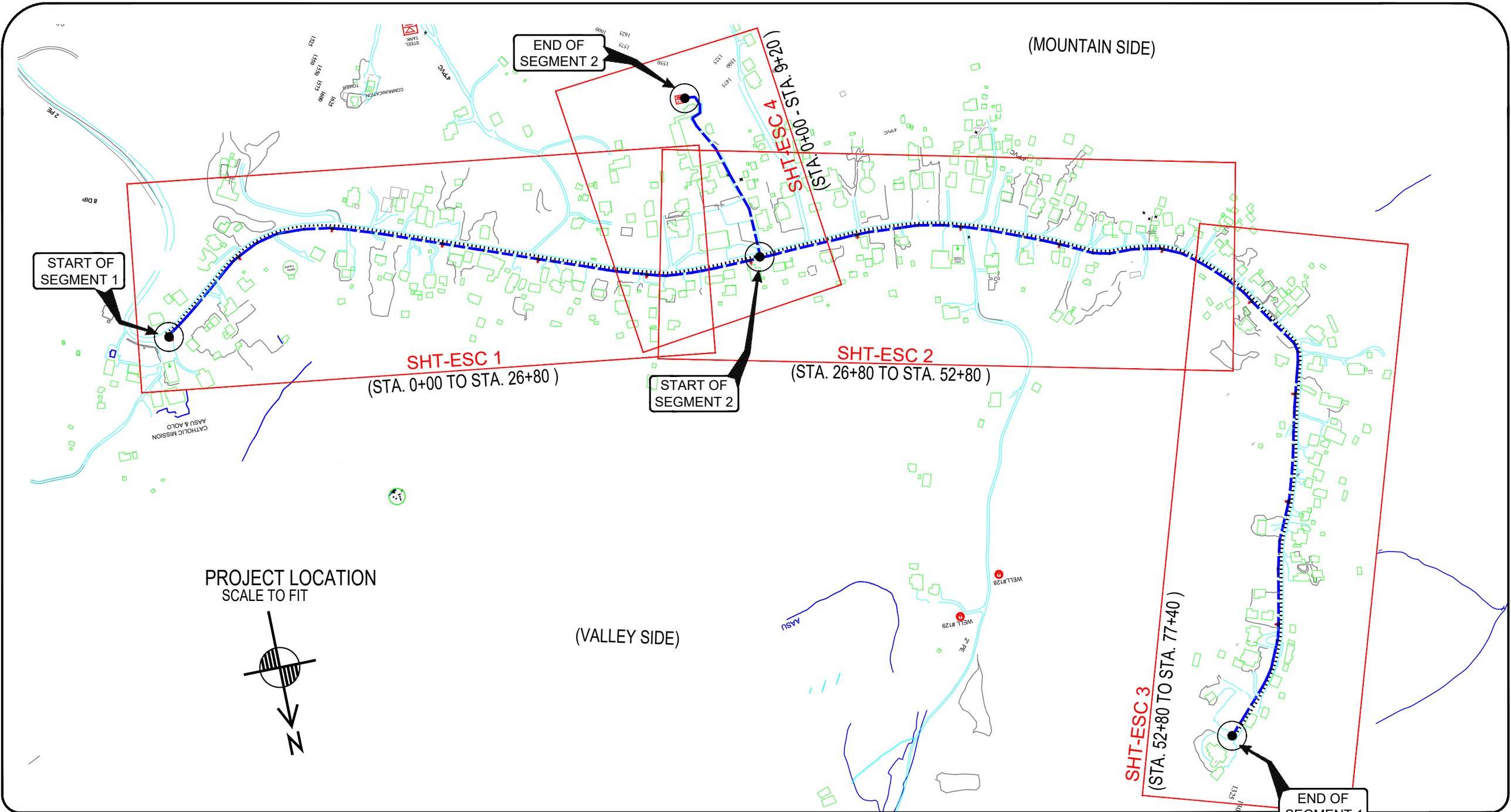

No.	Description	Date

REV. NO.:
REVISION:
CHECKED BY:
APPROVED BY:
DATE:

PREPARED BY: FToala
CHECKED BY: LTyrell
APPROVED BY: FAguila / LTyrell
ISSUE FOR: Construction

ASPA
AMERICAN SAMOA POWER AUTHORITY

AMERICAN SAMOA POWER AUTHORITY
ENGINEERING SERVICES DIVISION
P.O.BOX PPB, TAFUNA, PAGO PAGO, AS 96799

PROJECT NAME: AOLOAU WATERLINE REPLACEMENT PROJECT
DRAWING TITLE: EROSION AND SEDIMENTATION CONTROL
DRAWING DETAILS: VICINITY MAP | SHEETS LOCATIONS
PROJECT LOCATION: AOLOAU VILLAGE, AMERICAN SAMOA

SCALE: AS SHOWN
PROJECT NO: 1972803
DATE: APRIL 2023

SIGNATURE:
DATE:
SHEET NO. ESC1

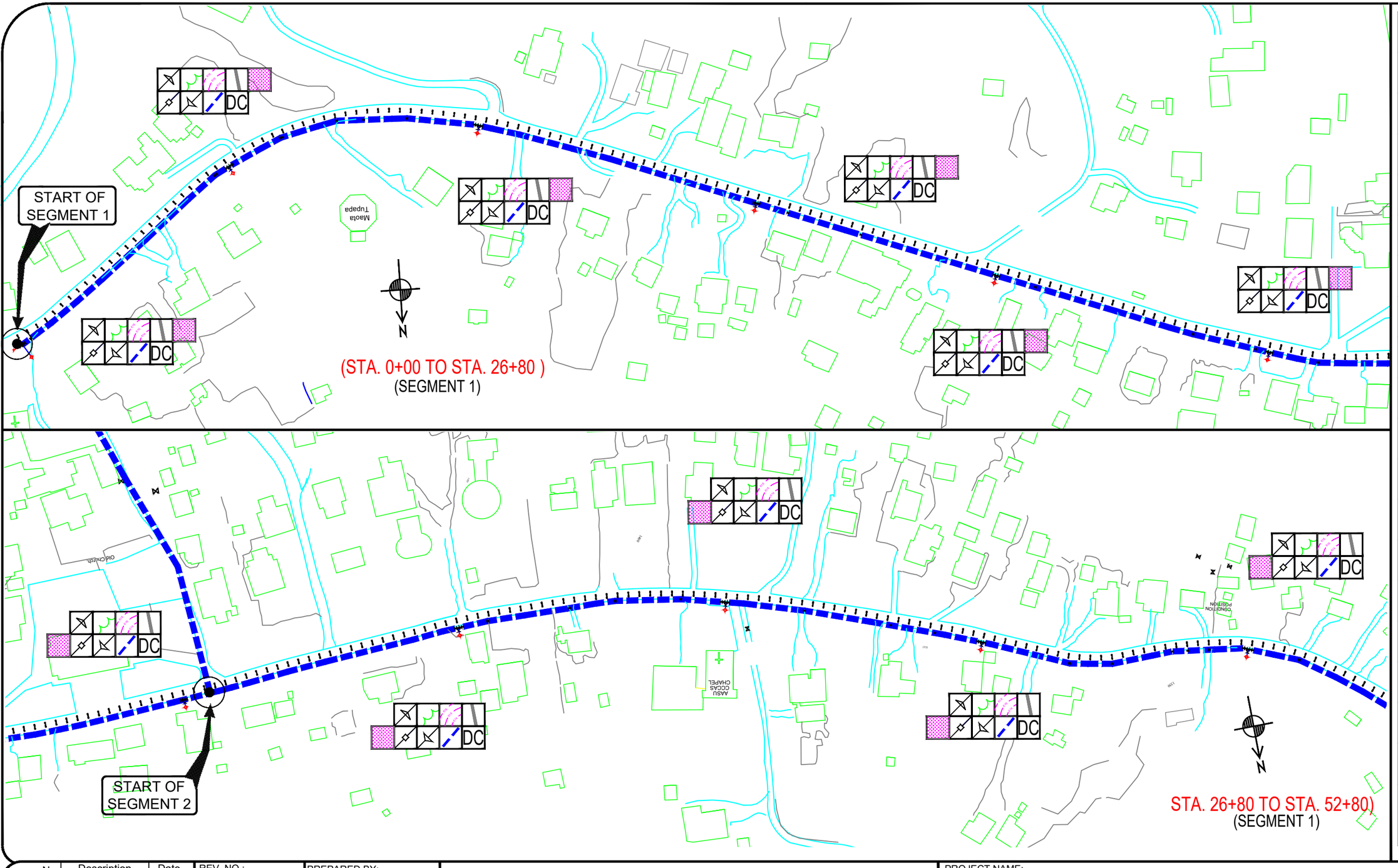

CONSTRUCTION ENTRANCE	CE
SILT FENCE	SF
DIVERSION DIKE	DD
RIGHT-OF-WAY DIVERSION	RWD
TEMPORARY LEVEL SPREADER	LS
TEMPORARY LEVEL DIVERTION	LD
TEMPORARY FILL DIVERSION	TFD
INLET PROTECTION	IP
EC-2 MATTING	B/M
EC-3 MATTING	B/M
EXISTING TREELINE	
EXISTING WATERS	
EXISTING 100' STREAM BUFFER	
PROPOSED TREELINE	
PROPOSED GRADING	
SEDIMENT BASIN DRAINAGE AREA	
PEA GRAVEL LEVEL SPREADER	
PEA GRAVEL LEVEL SPREADER	
LIMIT OF DISTURBANCE	
DC — NOTE: DUST CONTROL MEASURES ARE TO BE USED ONSITE AS NECESSARY THROUGHOUT THE CONSTRUCTION ACTIVITY	

No.	Description	Date

REV. NO.:
REVISION:
CHECKED BY:
APPROVED BY:
DATE:

PREPARED BY: FToala
CHECKED BY: LTyrell
APPROVED BY: FAguila / LTyrell
ISSUE FOR: Construction

AMERICAN SAMOA POWER AUTHORITY
ENGINEERING SERVICES DIVISION
P.O.BOX PPB, TAFUNA, PAGO PAGO, AS 96799

PROJECT NAME: AOLOAU WATERLINE REPLACEMENT PROJECT
DRAWING TITLE: EROSION AND SEDIMENTATION CONTROL
DRAWING DETAILS: (STA. 0+00 TO STA. 26+80) | (STA. 26+80 TO STA. 52+80)
PROJECT LOCATION: AOLOAU VILLAGE, AMERICAN SAMOA

SCALE: AS SHOWN
PROJECT NO: 1972803
DATE: APRIL 2023
SIGNATURE:
DATE:
SHEET NO. ESC2

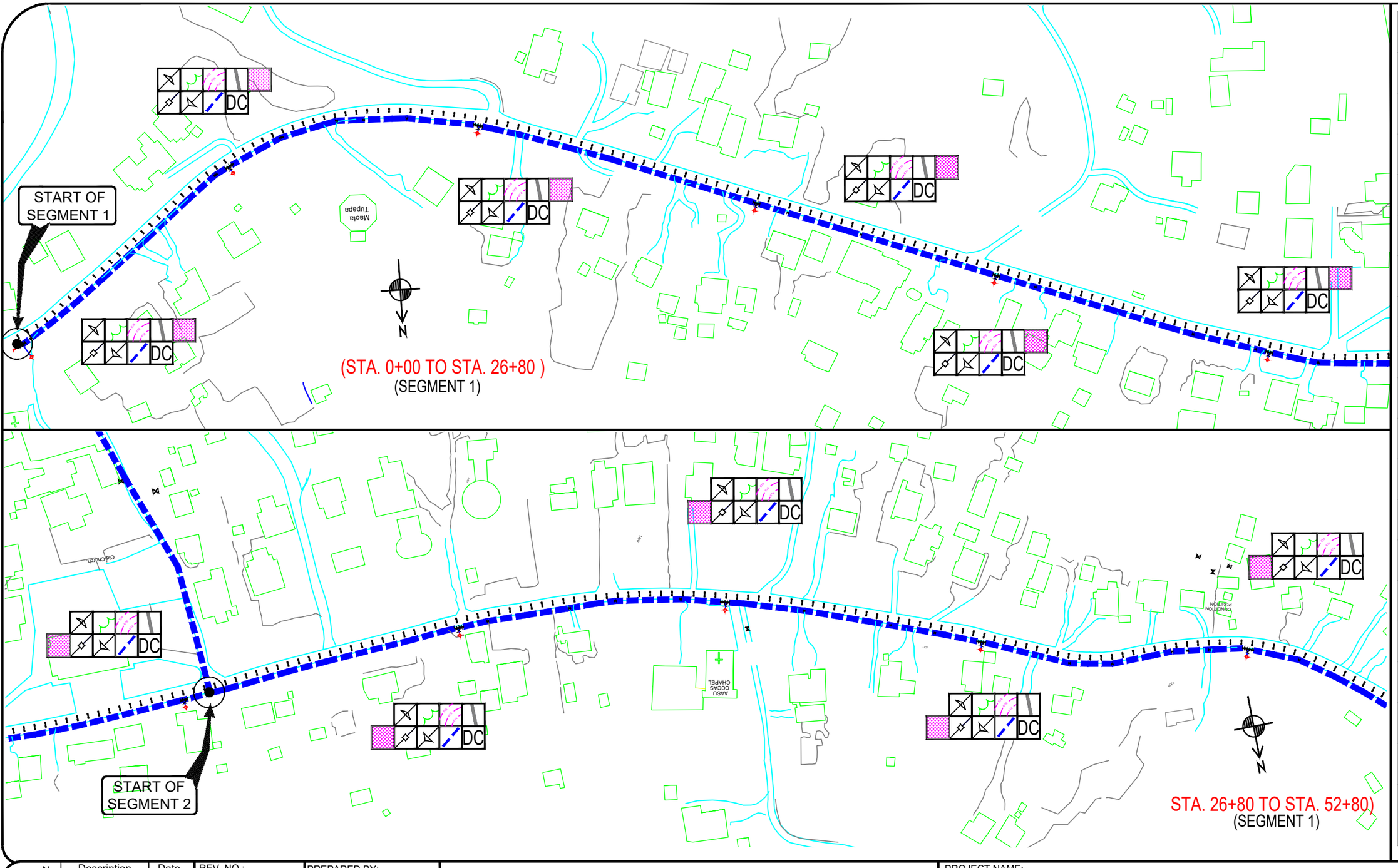

CONSTRUCTION ENTRANCE	CE
SILT FENCE	SF
DIVERSION DIKE	DD
RIGHT-OF-WAY DIVERSION	RWD
TEMPORARY LEVEL SPREADER	LS
TEMPORARY LEVEL DIVERTION	LD
TEMPORARY FILL DIVERSION	TFD
INLET PROTECTION	IP
EC-2 MATTING	B/M
EC-3 MATTING	B/M
EXISTING TREELINE	
EXISTING WATERS	
EXISTING 100' STREAM BUFFER	
PROPOSED TREELINE	
PROPOSED GRADING	
SEDIMENT BASIN DRAINAGE AREA	
PEA GRAVEL LEVEL SPREADER	
PEA GRAVEL LEVEL SPREADER	
LIMIT OF DISTURBANCE	
DC — NOTE: DUST CONTROL MEASURES ARE TO BE USED ONSITE AS NECESSARY THROUGHOUT THE CONSTRUCTION ACTIVITY	

No.	Description	Date

REV. NO.:
REVISION:
CHECKED BY:
APPROVED BY:
DATE:

PREPARED BY: FToala
CHECKED BY: LTyrell
APPROVED BY: FAguila / LTyrell
ISSUE FOR: Construction

ASPA
AMERICAN SAMOA POWER AUTHORITY

AMERICAN SAMOA POWER AUTHORITY
ENGINEERING SERVICES DIVISION
P.O.BOX PPB, TAFUNA, PAGO PAGO, AS 96799

PROJECT NAME: AOLOAU WATERLINE REPLACEMENT PROJECT
DRAWING TITLE: EROSION AND SEDIMENTATION CONTROL
DRAWING DETAILS: (STA. 0+00 TO STA. 26+80) | (STA. 26+80 TO STA. 52+80)
PROJECT LOCATION: AOLOAU VILLAGE, AMERICAN SAMOA

SCALE: AS SHOWN
PROJECT NO: 1972803
DATE: APRIL 2023

SIGNATURE:
DATE:
SHEET NO. ESC2

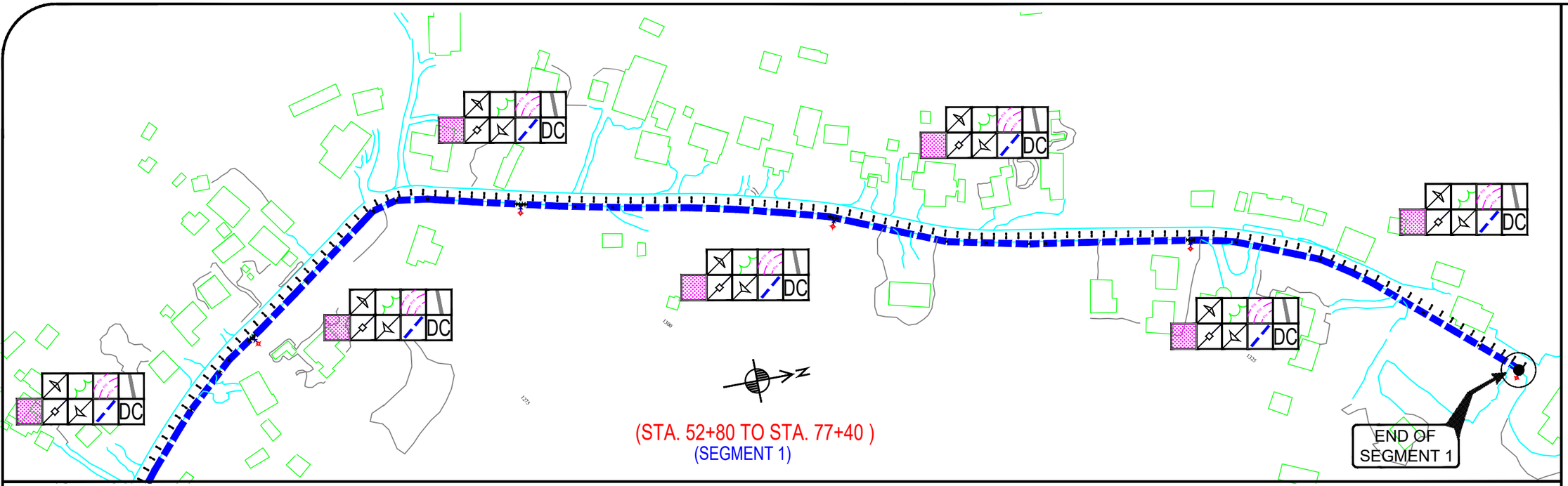

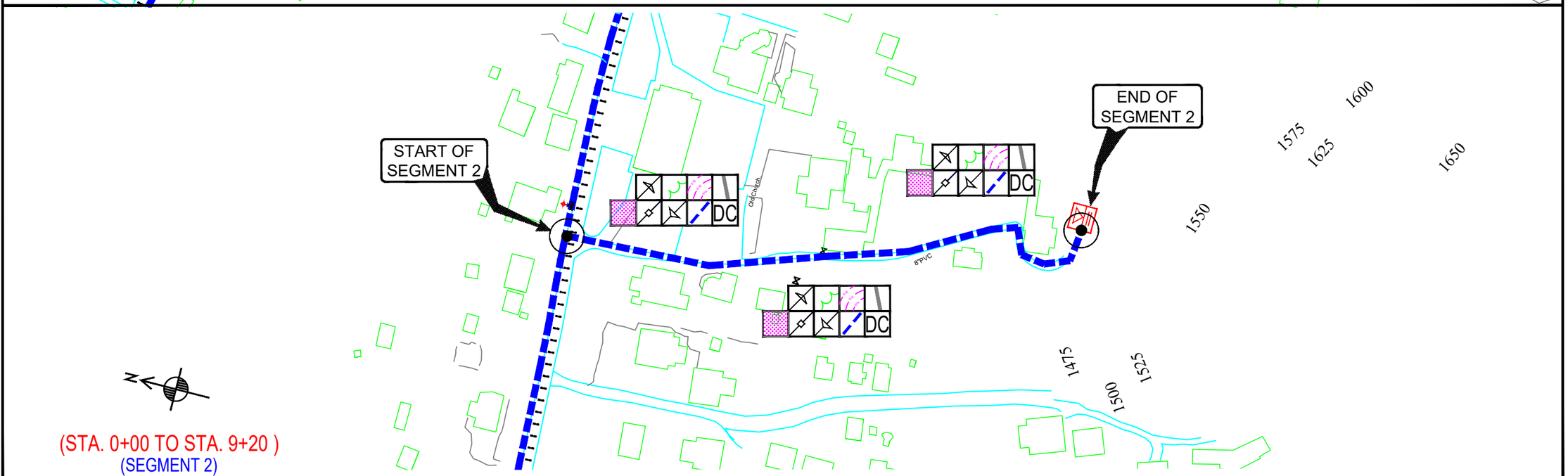

CONSTRUCTION ENTRANCE	CE
SILT FENCE	SF
DIVERSION DIKE	DD
RIGHT-OF-WAY DIVERSION	RWD
TEMPORARY LEVEL SPREADER	LS
TEMPORARY LEVEL DIVERTION	LD
TEMPORARY FILL DIVERSION	TFD
INLET PROTECTION	IP
EC-2 MATTING	B/M
EC-3 MATTING	B/M
EXISTING TREELINE	
EXISTING WATERS	
EXISTING 100' STREAM BUFFER	
PROPOSED TREELINE	
PROPOSED GRADING	
SEDIMENT BASIN DRAINAGE AREA	
PEA GRAVEL LEVEL SPREADER	
PEA GRAVEL LEVEL SPREADER	
LIMIT OF DISTURBANCE	
DC — NOTE: DUST CONTROL MEASURES ARE TO BE USED ONSITE AS NECESSARY THROUGHOUT THE CONSTRUCTION ACTIVITY	

No.	Description	Date

REV. NO.:
REVISION:
CHECKED BY:
APPROVED BY:
DATE:

PREPARED BY: FToala
CHECKED BY: LTyrell
APPROVED BY: FAguila / LTyrell
ISSUE FOR: Construction

ASPA
AMERICAN SAMOA POWER AUTHORITY

AMERICAN SAMOA POWER AUTHORITY
ENGINEERING SERVICES DIVISION
P.O.BOX PPB, TAFUNA, PAGO PAGO, AS 96799

PROJECT NAME: AOLOAU WATERLINE REPLACEMENT PROJECT
DRAWING TITLE: EROSION AND SEDIMENTATION CONTROL
DRAWING DETAILS: (STA. 52+80 TO STA. 77+40) (STA. 0+00 TO STA. 9+20)
PROJECT LOCATION: AOLOAU VILLAGE, AMERICAN SAMOA

SCALE: AS SHOWN
PROJECT NO: 1972803
DATE: APRIL 2023

SIGNATURE:
DATE:
SHEET NO. ESC3

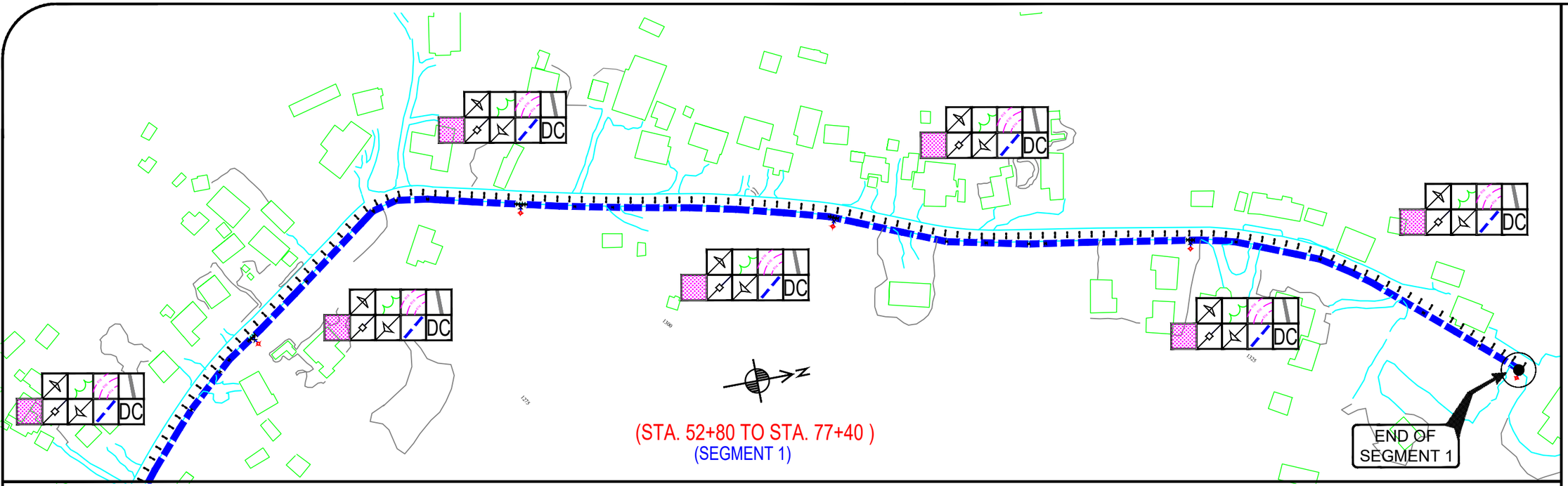

(STA. 52+80 TO STA. 77+40)
(SEGMENT 1)

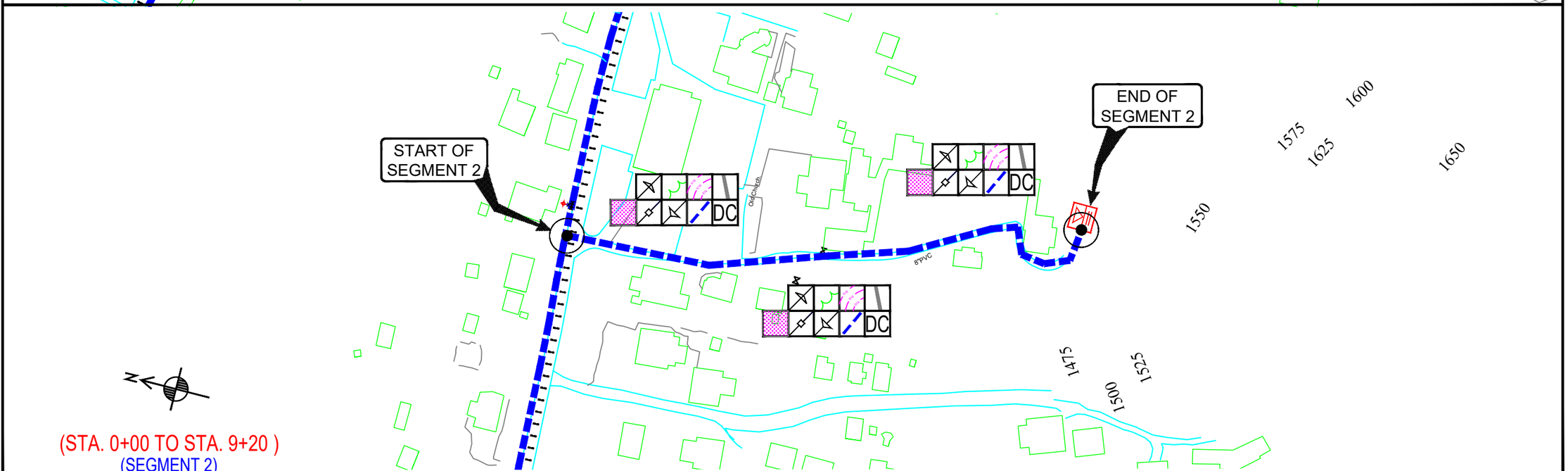

(STA. 0+00 TO STA. 9+20)
(SEGMENT 2)

CONSTRUCTION ENTRANCE	CE
SILT FENCE	SF
DIVERSION DIKE	DD
RIGHT-OF-WAY DIVERSION	RWD
TEMPORARY LEVEL SPREADER	LS
TEMPORARY LEVEL DIVERTION	LD
TEMPORARY FILL DIVERSION	TFD
INLET PROTECTION	IP
EC-2 MATTING	B/M
EC-3 MATTING	B/M
EXISTING TREELINE	
EXISTING WATERS	
EXISTING 100' STREAM BUFFER	
PROPOSED TREELINE	
PROPOSED GRADING	
SEDIMENT BASIN DRAINAGE AREA	
PEA GRAVEL LEVEL SPREADER	
PEA GRAVEL LEVEL SPREADER	
LIMIT OF DISTURBANCE	
DC — NOTE: DUST CONTROL MEASURES ARE TO BE USED ONSITE AS NECESSARY THROUGHOUT THE CONSTRUCTION ACTIVITY	

No.	Description	Date

REV. NO.:
REVISION:
CHECKED BY:
APPROVED BY:
DATE:

PREPARED BY: FToala
CHECKED BY: LTyrell
APPROVED BY: FAguila / LTyrell
ISSUE FOR: Construction

ASPA
AMERICAN SAMOA POWER AUTHORITY

AMERICAN SAMOA POWER AUTHORITY
ENGINEERING SERVICES DIVISION
P.O.BOX PPB, TAFUNA, PAGO PAGO, AS 96799

PROJECT NAME: AOLOAU WATERLINE REPLACEMENT PROJECT
DRAWING TITLE: EROSION AND SEDIMENTATION CONTROL
DRAWING DETAILS: (STA. 52+80 TO STA. 77+40) (STA. 0+00 TO STA. 9+20)
PROJECT LOCATION: AOLOAU VILLAGE, AMERICAN SAMOA

SCALE: AS SHOWN
PROJECT NO: 1972803
DATE: APRIL 2023

SIGNATURE:
DATE:
SHEET NO. ESC3

EROSION AND TEMPORARY DUST CONTROL

1. DURING CONSTRUCTION, PREVENTIVE MAINTENANCE MEASURES SHALL BE USED TO CONTROL FORESEEABLE DUST, EROSION OR SEDIMENTATION PROBLEMS WHICH MAY ARISE AS THE JOB PROGRESSES.
2. FUGITIVE DUST AND SOLID WASTE DISPOSAL DURING GRUBBING ACTIVITIES SHALL MEET REQUIREMENTS OF ADMINISTRATIVE RULES, TITLE II, CHAPTER 60, AIR POLLUTION CONTROL AND CHAPTER 58, SOLID WASTE MANAGEMENT CONTROL.
3. THE CONTRACTOR AT HIS OWN EXPENSE, SHALL KEEP THE PROJECT AREA AND SURROUNDING AREA FREE FROM DUST NUISANCE. THE WORK SHALL BE IN CONFORMANCE WITH THE AIR POLLUTION CONTROL STANDARDS AND REGULATIONS OF THE STATE DEPARTMENT OF HEALTH.
4. WHERE CONSTRUCTION ACTIVITY ON A PORTION OF THE SITE IS TEMPORARILY CEASED, AND EARTH DISTURBING ACTIVITIES WILL BE RESUMED WITHIN 14 DAYS, TEMPORARILY STABILIZATION MEASURES DO NOT HAVE TO BE INITIATED ON THAT PORTION OF THE SITE. ALL EXPOSED AREAS TO BE LEFT EXPOSED FOR LONGER THAN FOURTEEN (14) DAYS SHALL BE HYDROMULCH SEEDED WITH RYE GRASS.
5. ALL SLOPES AND EXPOSED AREAS SHALL BE SODDED OR PLANTED AS SOON AS FINAL GRADES HAVE BEEN ESTABLISHED. PLANTING SHALL NOT BE DELAYED UNTIL ALL GRADING WORKS HAS BEEN COMPLETED. GRADING TO FINAL GRADE SHALL BE CONTINUOUS, AND ANY AREA WITHIN WHICH WORK HAS BEEN INTERRUPTED OR DELAYED SHALL BE PLANTED.

BEST MANAGEMENT PRACTICE NOTES

1. MEASURES TO CONTROL EROSION AND OTHER POLLUTANTS SHALL BE IN PLACE BEFORE ANY WORK IS INITIATED. THESE MEASURES SHALL BE PROPERLY CONSTRUCTED AND MAINTAINED THROUGHOUT THE CONSTRUCTION PERIOD.
2. ALL TEMPORARY EROSION CONTROL MEASURES SHALL BE CHECKED AND REPAIRED AS NECESSARY.
3. GRASSING OR MULCHING OF EXPOSED AREAS TO BE DONE AS FINISH GRADES ARE ESTABLISHED.
4. DIVERSION OF STORM RUNOFF AWAY FROM THE FILL SLOPES UNTIL GRASSING ON THE FILL SLOPES ARE ESTABLISHED.
5. PROVIDE STABILIZED CONSTRUCTION ENTRANCE.

NOTES:

1. STABILIZED CONSTRUCTION ENTRANCE SHALL BE MAINTAINED AT THE EGRESS AND INGRESS TO THE SITE. TIRE WASH MAY BE USED IN LIEU OF STABILIZED CONSTRUCTION ENTRANCE. CONTRACTOR IS RESPONSIBLE TO KEEP ROADWAYS CLEAN FROM SOIL AND CONSTRUCTION DEBRIS.
2. DUST CONTROL SHOULD BE APPLIED TO REDUCE DUST EMISSIONS. WATER THE AREA DURING CONSTRUCTION TO CONTROL DUST.
3. ALL STORM DRAIN INLETS ON SITE AND THOSE OFF SITE WHICH MAY RECEIVE RUN OFF FROM THE SITE SHALL USE AN INLET PROTECTION DEVICE.

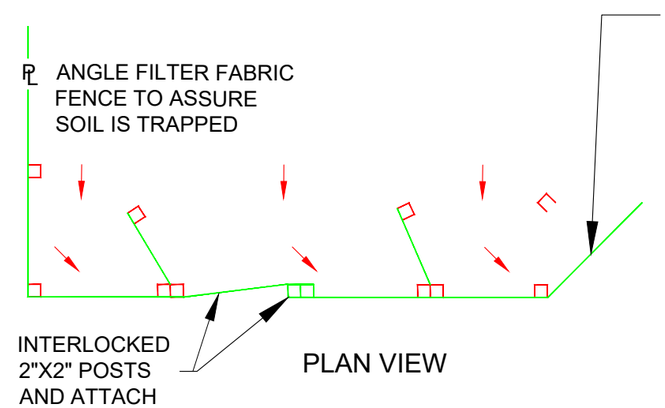

PLAN VIEW

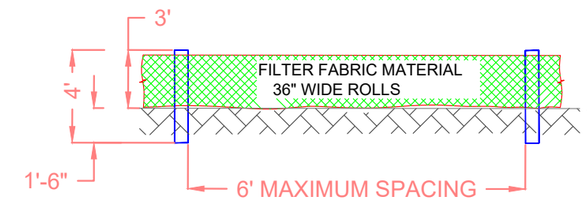

FRONT VIEW

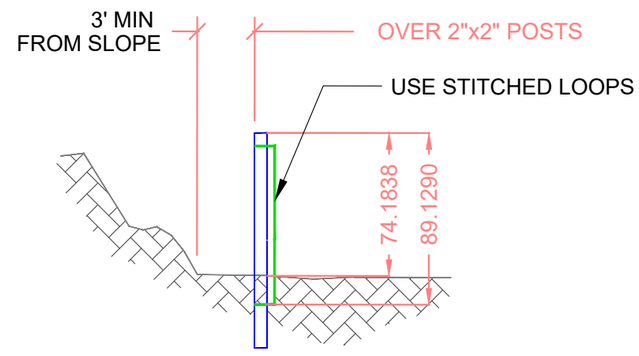

PROFILE

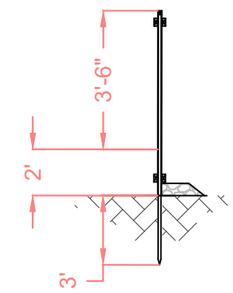

POST SECTION

NOTES:

1. BURY BOTTOM OF FILTER FABRIC 6" VERTICALLY BELOW FINISHED GRADE.
2. 2"X2" FIR, PINE OR STEEL FENCE POSTS.
3. POSTS TO BE INSTALLED ON UPHILL SIDE OF SLOPE.
4. COMPACT BOTH SIDES OF FILTER FABRIC TRENCH.
5. PANELS MUST BE PLACED ACCORDING TO SPACING ON DETAIL NO.940

No.	Description	Date

REV. NO.:
REVISION:
CHECKED BY:
APPROVED BY:
DATE:

PREPARED BY: FToala
CHECKED BY: LTyrell
APPROVED BY: FAguila / LTyrell
ISSUE FOR: Construction

AMERICAN SAMOA POWER AUTHORITY
ENGINEERING SERVICES DIVISION
P.O.BOX PPB, TAFUNA, PAGO PAGO, AS 96799

PROJECT NAME: AOLOAU WATERLINE REPLACEMENT PROJECT
DRAWING TITLE: EROSION AND SEDIMENTATION CONTROL
DRAWING DETAILS: GENERAL NOTES | PROTECTIVE FABRIC DETAILS
PROJECT LOCATION: AOLOAU VILLAGE, AMERICAN SAMOA

SCALE: AS SHOWN
PROJECT NO: 1972803
DATE: APRIL 2023

SIGNATURE:
DATE:
SHEET NO. ESC0

AOLOAU WATERLINE REPLACEMENT PROJECT
TUTUILA ISLAND, AMERICAN SAMOA.

ABBREVIATIONS:

@	AT	PROP	PROPOSED
AFF	ABOVE FINISHED FLOOR	PVC	POLYVINYL CHLORIDE PIPE
AFG	ABOVE FINISHED GRADE	PE	POLYETHYLENE PIPE
AGG	AGGREGATE	ACP	ASBESTOS CEMENT PIPE
ARV	AIR/VAC RELEASE VALVE	GA	GAUGE
AS–EPA	AMERICAN SAMOA ENVIRONMENTAL PROTECTION AGENCY	GALV	GALVANIZED
BLDG	BUILDING	GR	GRADE
CB	CATCH BASIN	GV	GATEVALVE
CI	CAST IRON	HB	HOSE BIB
CL	CENTER LINE	HWY	HIGHWAY
CMP	CORRUGATED METAL PIPE	ID	INSIDE DIAMETER
CO	CLEAN OUT	INSUL	INSULATION
CONC	CONCRETE	INV	INVERT
CP	CONTROL POINT	IR	IRON ROD
DET	DETAIL	JT	JOINT
DIA	DIAMETER	LT	LEFT
DIM	DIMENSION	M	METER
DIP	DUCTILE IRON PIPE	MANUF	MANUFACTURED
DW	DRIVEWAY	MAX	MAXIMUM
E	EAST	MFR	MANUFACTURER
ELEV	ELEVATION	MH	MANHOLE
ELEC	ELECTRICAL	MIN	MINIMUM
EOL	END OF LINE	MISC	MISCELLANEOUS
EOP	EDGE OF PAYMENT	(N)	NEW
EQ	EQUAL	N	NORTH
EXT'G	EXISTING	NIC	NOT IN CONTRACT
EXT	EXTERIOR	NO	NOT OPEN
FD	FLOOR DRAIN	NC	NORMALLY CLOSED
FH	FIRE HYDRANT	NTS	NOT TO SCALE
FIN	FINISHED	OC	ON CENTER
FLR	FLOOR	OD	OUTSIDE DIAMETER
FND	FOUND	OH	OVERHEAD
FT	FEET	OSHA	OCCUPATIONAL SAFETY HEALTH ADMINISTRATION
FTG	FOOTING	SC	SERVICE CONNECTION
PL	PROPERTY LINE		

No.	Description	Date

REV. NO.:
REVISION:
CHECKED BY:
APPROVED BY:
DATE:

DESIGNED BY: FToala
CHECKED BY: LTyrell
APPROVED BY: FAguila / LTyrell
ISSUE FOR: Construction

AMERICAN SAMOA POWER AUTHORITY
ENGINEERING SERVICES DIVISION
P.O.BOX PPB, TAFUNA, PAGO PAGO, AS 96799

PROJECT NAME: AOLOAU 6"Ø WATERLINE REPLACEMENT PROJECT
DRAWING TITLE: TABLE OF CONTENTS & ABBREVIATIONS
PROJECT LOCATION: AOLOAU VILLAGE, AMERICAN SAMOA

SCALE: AS SHOWN
PROJECT NO: #1958785
DATE: APRIL 2023

SIGNATURE:
DATE:
SHEET NO. G1

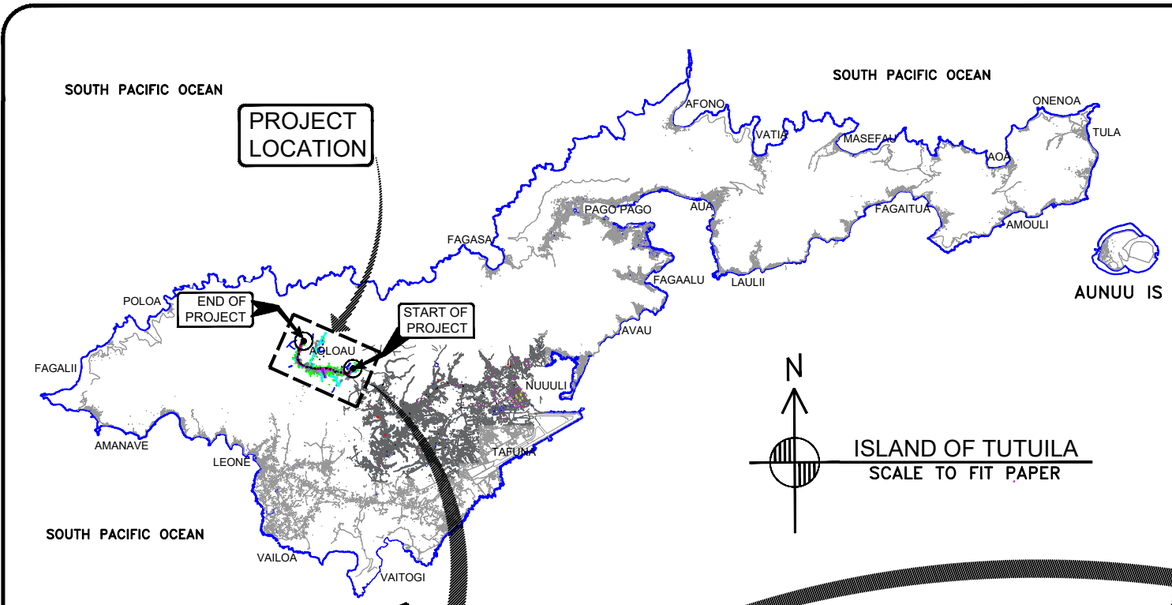

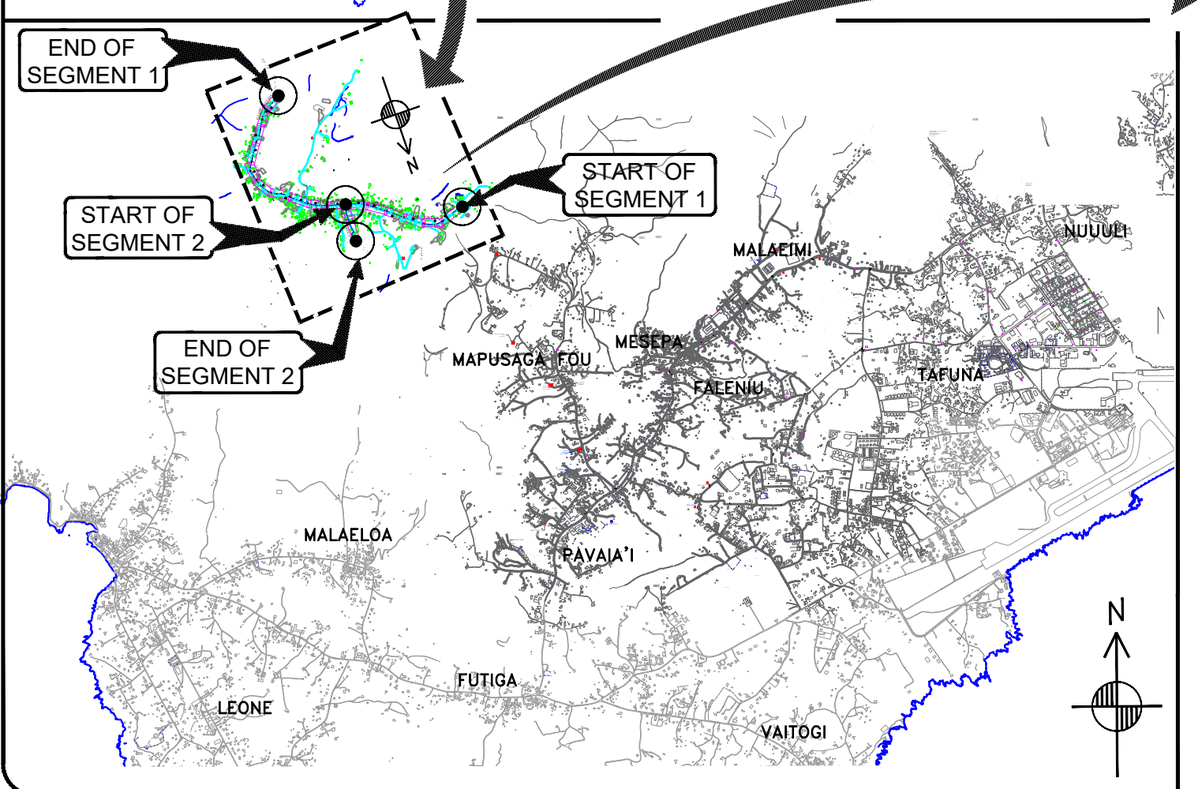

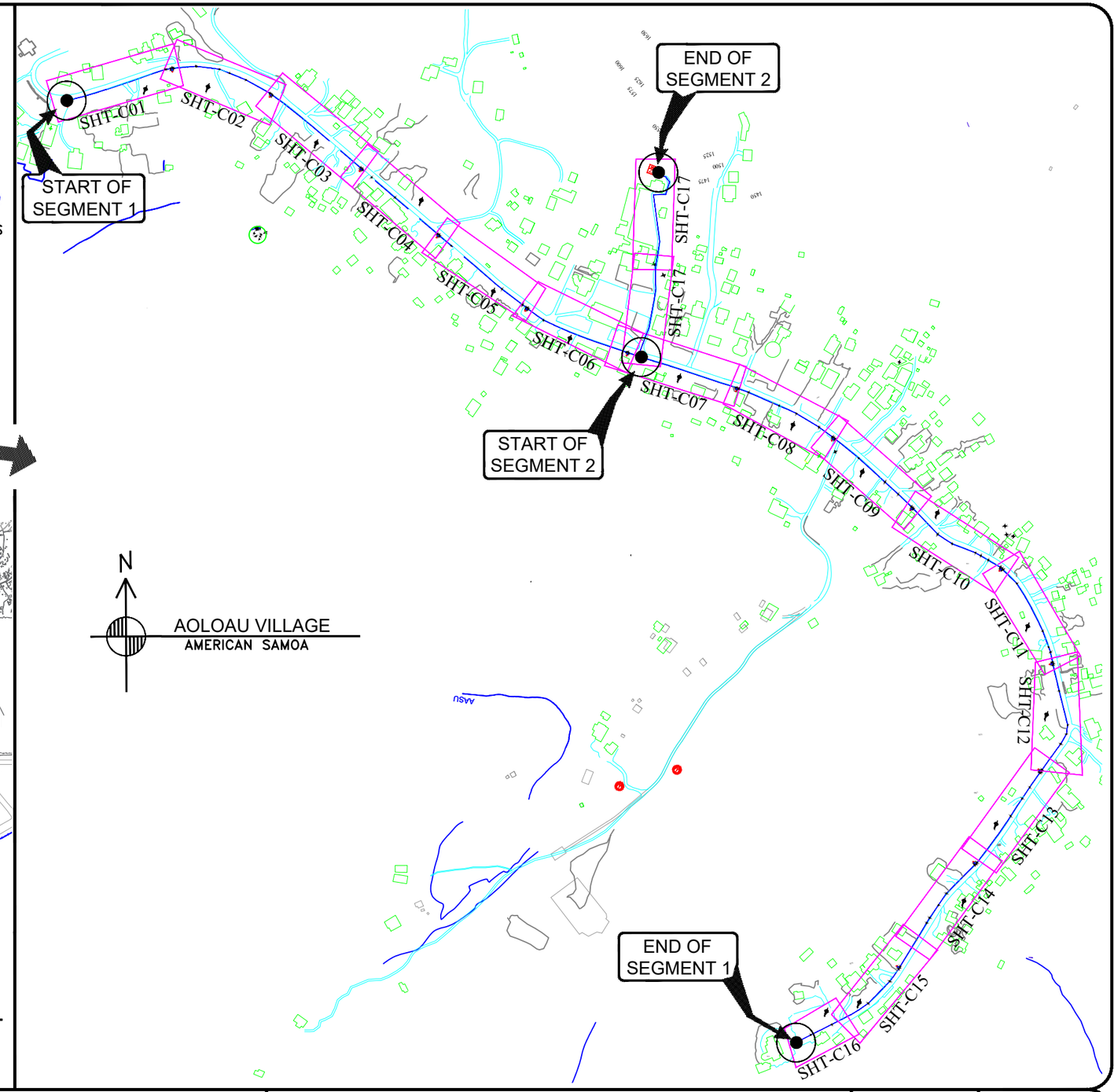

No.	Description	Date

REV. NO.:	
REVISION:	
CHECKED BY:	
APPROVED BY:	
DATE:	

DESIGNED BY:	FToala
CHECKED BY:	LTyrell
APPROVED BY:	FAguila / LTyrell
ISSUE FOR:	Construction

AMERICAN SAMOA POWER AUTHORITY

ENGINEERING SERVICES DIVISION

P.O.BOX PPB, TAFUNA, PAGO PAGO, AS 96799

PROJECT NAME: AOLOAU 6"Ø WATERLINE REPLACEMENT PROJECT	SCALE: AS SHOWN	SIGNATURE:
		DATE:
DRAWING TITLE: VICINITY MAP & PROJECT LOCATION	PROJECT NO: #1958785	
PROJECT LOCATION: AOLOAU VILLAGE, AMERICAN SAMOA	DATE: APRIL 2023	SHEET NO. G2

LEGEND:

- WATER MAIN
- EXISTING WATER MAIN
- GATE VALVE
- FIRE HYDRANT
- ELBOW
- TEE
- ARV
- EXISTING WELL
- BENCH MARK
- POWER POLE
- WATER METER W/ BOX
- WATER SERVICE LINE
- GATE VALVE W/ BOX
- PAVED ROAD
- UNPAVED ROAD
- SIGN POST
- DIAMETER
- PRESSURE GAUGE
- CONTOUR LINE
- PRV

UTILITY GENERAL NOTES:

1. EXISTING WATERLINE LOCATIONS ARE APPROXIMATE. CONTRACTOR SHALL COORDINATE LOCATING EXISTING UTILITY WITH ASPA OR OWNERS OF UTILITY LINES PRIOR TO EXCAVATION WITH APPROPRIATE ADVANCE NOTIFICATION.

2. ABANDON EXISTING WATER MAIN AND SERVICES IN PLACE ONLY AFTER THE NEW WATER MAIN HAS BEEN DISINFECTED AND APPROVED BY THE AMERICAN SAMOA POWER AUTHORITY (ASPA) AND THE AMERICAN SAMOA ENVIRONMENTAL PROTECTION AGENCY.

3. ALL GATE VALVES ARE TO BE INSTALLED WITH VALVE BOXES PER DRAWINGS AND SPECIFICATIONS.

4. ALL FLUSH VALVES ARE TO BE INSTALLED IN VALVE BOXES PER DRAWINGS AND SPECIFICATIONS.

5. ALL STATION LOCATIONS ARE APPROXIMATE.

6. CONTRACTOR IS RESPONSIBLE FOR MEETING CONDITIONS OF THE PNRS LAND-USE PERMIT.

7. FOR CONFLICT BETWEEN DRAWINGS AND SPECIFICATIONS, PNRS PERMIT REQUIREMENTS AND CONDITIONS SHALL APPLY, THEN SPECIFICATIONS, THEN DRAWINGS.

8. CONTRACTOR MUST CONFORM WITH ALL REQUIREMENTS OF THE OSHA STANDARD FOR EXCAVATION SAFETY (29 CFR 1926 SUBPART P). INCLUDED AMONG THE OSHA STANDARDS IS THE REQUIREMENT FOR PROTECTION OF WORKERS IN EXCAVATIONS 4 FEET OR GREATER IN DEPTH. PROTECTIVE SYSTEMS CAN BE SLOPING/BENCHING OF EXCAVATION WALLS, OR INSTALLATION OF SUPPORT/SHIELDING DEVICES. DESIGN OF PROTECTIVE SYSTEMS MUST BE BASED ON FIELD CLASSIFICATION OF THE SOIL BY A COMPETENT PERSON. PROTECTIVE SYSTEMS MUST BE IN ACCORDANCE WITH THE TABLES AND FIGURES SHOWN IN THE OSHA STANDARDS, OR MUST BE A MANUFACTURED PROTECTION SYSTEM USED IN STRICT CONFORMANCE WITH MANUFACTURER'S INSTRUCTIONS, OR MUST BE A PROTECTION SYSTEM DESIGNED BY A REGISTERED PROFESSIONAL ENGINEER. THE

9. CONTRACTOR SHALL PROVIDE BOTH CONC. ANCHORS & CLAY DIKES AS REQUIRED BY THE ENGINEER AS FOLLOWS:

10%<SLOPE<15%: ONE EVERY 200 LINEAR FEET CLAY DIKES ONLY
15% OR GREATER SLOPES:
EVERY 100 LINEAR FEET-CONC. ANCHORS & CLAY DIKES.

A.) CLAY DIKES SHALL EXTEND FOR THE FULL TRENCH WIDTH (USED FOR PIPE BEDDING AND COVER) AND HAVE A LENGTH OF 5 FEET. LOCATED IN THE MIDDLE OF PIPE LENGTH, AT LEAST 2 FEET FROM A PIPE JOINT. MATERIALS SHALL BE CLAY AS DESIGNATED "CL" AND DEFINED UNDER THE UNIFIED SOIL CLASSIFICATION SYSTEM.

B.) CONC. ANCHORS SHALL BE LOCATED AT THE DOWNSTREAM SIDE OF JOINTS, SHALL BE UN-REINFORCED AND SHALL BE MINIMUM OF TRENCH WIDTH, 3 FEET HIGH (REPLACING PIPE BEDDING AND COVER) AND 2 FEET THICK.

10. LEVEL SURVEY & TOPOGRAPHIC MAPS USED FOR PLAN SHEETS ARE DATED FEB. 2006, CONDUCTED BY ASG/SURVEY DEPT. BUILDINGS AND ROADWAYS WERE UPDATED BY AERIAL PHOTOGRAPHY DURING AUGUST/SEPTEMBER 1990. LOCATIONS, BUILDING LOCATIONS, AND OTHER FEATURES MAY HAVE CHANGED SINCE THE LAST MAP UPDATE.

11. UTILITIES KNOWN TO EXIST BY THE ENGINEER FROM RESEARCH OF THE AVAILABLE RECORDS ARE SHOWN ON THE DRAWINGS. NO RESPONSIBILITY IS CLAIMED FOR COMPLETENESS OR ACCURACY. PRIOR TO STARTING CONSTRUCTION, VERIFY LOCATION AND ELEVATION OF ALL EXISTING UTILITIES WHICH MAY INTERFERE WITH THE FACILITIES INSTALLED UNDER THIS CONTRACT.

12. ELEVATIONS USED IN THE DRAWINGS ARE BASED ON 0.00 AT THE MEAN SEA LEVEL, HORIZONTAL COORDINATES ARE BASED ON THE AMERICAN SAMOA COORDINATE SYSTEM GRID.

13. PROVIDE, INSTALL, AND MAINTAIN SIGNS BARRICADES, MARKERS, CONES AND PROTECTIVE FACILITIES AND TAKE ALL NECESSARY PRECAUTIONS FOR THE PROTECTION, CONVENIENCE AND SAFETY OF THE PUBLIC DURING THE CONSTRUCTION OPERATIONS, CONFORM TO THE REQUIREMENTS OF THE DEPARTMENT OF PUBLIC SAFETY AND THE DEPARTMENT OF PUBLIC WORKS IN REGARD TO TRAFFIC SAFETY WHILE WORKING IN THE PUBLIC RIGHT-OF-WAY. ALL TRAFFIC CONTROL PLANS MUST BE APPROVED BY DPS AND PUBLIC WORKS PRIOR TO START OF CONSTRUCTION.

14. MAINTAIN TWO-WAY TRAFFIC ON HIGHWAY AT ALL TIMES UNLESS PRIOR PERMISSION TO CLOSE ONE LANE IS OBTAINED FROM THE DEPARTMENT OF PUBLIC SAFETY. IF THE LANE CLOSURE IS REQUIRED, PROPER ADVANCE NOTICE TO PUBLIC VIA NORMAL PUBLICATION OR RADIO ANNOUNCEMENTS IS REQUIRED.

15. KEEP THE WORK SITE AND SURROUNDING AREAS FREE FROM DUST NUISANCE. DUST CONTROL, SEDIMENTATION CONTROL, AND ALL SUCH PLANS MUST BE APPROVED BY THE AMERICAN SAMOA ENVIRONMENTAL PROTECTION AGENCY PRIOR TO START OF CONSTRUCTION.

16. REMOVE ALL SILT AND DEBRIS RESULTING FROM THE WORK AND DEPOSITED IN DRAINAGE FACILITIES, ROADWAYS, AND OTHER AREAS WHEN NECESSARY. CONSTRUCT SILT FENCES AND OTHER EROSION CONTROL DEVICES AROUND THE WORK TO PREVENT DAMAGE TO STREAMS OR OTHER WATERWAYS.

17. BARRICADE OPEN EXCAVATIONS AND POST WITH WARNING LIGHTS. KEEP UNATTENDED EXCAVATIONS FREE OF WATER AND MAINTAIN SLOPING AND STABLE WALLS WHEN OVER 4 FEET DEEP. LEAVE A LADDER OR OTHER DEVICE TO ALLOW ESCAPE FROM EXCAVATION. WHEN PERSONNEL ARE IN THE EXCAVATION, AT LEAST 2 MEANS OF EGRESS ARE REQUIRED. LADDERS ARE REQUIRED TO ALLOW NOT MORE THAN 25 FEET OF LATERAL TRAVEL FOR TRENCH EGRESS.

18. THE CONTRACTOR IS RESPONSIBLE FOR PROVIDING ALL NECESSARY EQUIPMENT AND MATERIALS FOR TESTING WATERLINES.

19. ROADS AND PROPERTIES AFFECTED BY EXCAVATION MUST BE REFURBISHED TO ORIGINAL STATUS OR BETTER AT COMPLETION OF PROJECT.

20. CONTRACTOR TO PROVIDE ELECTRONIC AS-BUILT DRAWINGS IN AUTODESK LAND DEVELOPMENT 2006 OR A RECENT VERSION THEREOF, OF ALL APPURTENANCES AND SURVEY REFERENCE POINTS TO ACCEPTABLE LOCATIONS. MINIMAL REQUIREMENT OF 2 POINTS FOR MINOR AND 3 POINTS FOR MAJOR APPURTANCES.

21. MAINTAIN WATER AND SEWER LINE SEPARATION IN ACCORDANCE WITH REGULATIONS.

22. INSTALL DETECTABLE WARNING TAPE AND CONDUCTOR TAPE ON TOP OF ALL PIPE.

23. ALL REBARS SHOULD BE EPOXY COATED. UNLESS DIRECTED BY ENGINEER

24. CONSTRUCT SWALES AS SHOWN IN DETAILS WHENEVER SLOPE EXCEEDS 8%.

No.	Description	Date

REV. NO.:
REVISION:
CHECKED BY:
APPROVED BY:
DATE:

DESIGNED BY: FToala
CHECKED BY: LTyrell
APPROVED BY: FAguila / LTyrell
ISSUE FOR: Construction

AMERICAN SAMOA POWER AUTHORITY
ENGINEERING SERVICES DIVISION
P.O.BOX PPB, TAFUNA, PAGO PAGO, AS 96799

PROJECT NAME: AOLOAU 6"Ø WATERLINE REPLACEMENT PROJECT
DRAWING TITLE: LEGEND UTILITY GENERAL NOTES
PROJECT LOCATION: AOLOAU VILLAGE, AMERICAN SAMOA

SCALE: AS SHOWN
PROJECT NO: #1958785
DATE: APRIL 2023

SIGNATURE:
DATE:
SHEET NO. G3

CONSTRUCTION NOTES:

1. THE CONTRACTOR SHALL COORDINATE HIS HAUL ROUTE STAGING AREA AND ALL ASSOCIATED REQUIREMENTS, SUCH AS, LAND USE PERMIT, WITH THE PNRS, CONTRACTING OFFICER, AND AFFECTED LANDOWNER.
2. A SEPARATE LAND USE PERMIT MUST BE OBTAINED BY THE CONTRACTOR IF THE CONTRACTOR'S STAGING AREA OR ANY WORK IS OUTSIDE THE LIMITS OF THE CONTRACT. THE EXISTING LAND USE PERMIT IS CONDITIONED ON A DIVISION OF MARINE AND WILDLIFE RESOURCES REVIEW PRIOR TO CONSTRUCTION.
3. THE CONTRACTOR SHALL BE RESPONSIBLE FOR THE CLEARING AND REMOVAL OF ALL SILT AND DEBRIS GENERATED BY HIS GRADING AND CONSTRUCTION WORK AND DEPOSITED AND ACCUMULATED ON ROADWAYS AND OTHER AREAS.
4. ALL EXISTING UTILITIES, CONCRETE WALKWAYS, STEPS AND WALLS, WHETHER OR NOT SHOWN ON THE DRAWINGS, EXCEPT THOSE DESIGNATED TO BE REMOVED, SHALL BE PROTECTED FROM DAMAGED AT ALL TIMES DURING CONSTRUCTION AND GRADING WORK. ANY DAMAGES TO THEM SHALL BE REPAIRED BY THE CONTRACTOR AT HIS EXPENSE.
5. THE CONTRACTOR SHALL VERIFY DIMENSIONS, LOCATIONS, ELEVATIONS, ETC. THAT ARE INDICATED FOR VERIFICATION AND INFORM THE CONTRACTING OFFICER IN WRITING OF ANY DIFFERENCES PRIOR TO INSTALLATION OF NEW FACILITIES.
6. THE CONTRACTOR SHALL TONE AND PROBE THE AREA PRIOR TO ALL EXCAVATION AND TRENCHING TO VERIFY THE LOCATION OF ALL EXISTING UTILITIES AND SHALL BE RESPONSIBLE FOR REPAIR OR REPLACEMENT OF SAME IN THE EVENT OF DAMAGES DUE TO CONTRACTORS CONSTRUCTION PRACTICES. WHENEVER CONNECTIONS OF NEW UTILITIES TO EXISTING UTILITIES ARE SHOWN ON THE PLANS, THE CONTRACTOR SHALL EXPOSE THE EXISTING LINES AT THE PROPOSED CONNECTIONS TO VERIFY THEIR LOCATIONS, DEPTHS AND ASSURE THAT CONNECTIONS CAN BE MADE PRIOR TO EXCAVATION FOR THE NEW LINES AT NO COST TO THE OWNER. ANY NECESSARY ADJUSTMENTS FOR THE NEW LINES TO ENSURE PROPER CONNECTIONS TO THE EXISTING SHALL BE THE CONTRACTOR'S RESPONSIBILITY. THE CONTRACTOR SHALL ALSO CONTACT ASPA, BLUESKY AND ASTCA TO PROPERLY LOCATE THE UNDERGROUND UTILITIES AND CABLES THAT LIE IN AND ADJACENT TO THE WORK AREA.
7. WORK SHALL BE DONE BETWEEN 7:30AM AND 4:00PM SAMOA STANDARD TIME. NO WORK SHALL BE DONE ON SATURDAYS, SUNDAYS, FEDERAL HOLIDAYS OR AFTER NORMAL WORK HOURS AT ANY TIME, WITHOUT SPECIAL ARRANGEMENT AND PRIOR APPROVAL BY THE CONTRACTING OFFICER. PROJECT WORK SHALL BE IN CONFORMANCE WITH APPLICABLE FEDERAL AND LOCAL LAWS AND REGULATIONS REGARDING COMMUNITY NOISE CONTROL.
8. THE CONTRACTOR SHALL BE RESPONSIBLE FOR THE PROTECTION OF ALL WATERLINES DURING CONSTRUCTION. THE CONTRACTOR SHALL BE ESPECIALLY CAREFUL WHEN EXCAVATING BEHIND WATERLINE TEES AND BENDS WHEREVER THERE IS POSSIBILITY OF WATERLINE MOVEMENT DUE TO REMOVAL OF THE SUPPORTING EARTH BEYOND THE EXISTING REACTION BLOCKS. THE CONTRACTOR SHALL TAKE WHATEVER MEASURE TO PROTECT THE WATERLINE SUCH AS CONSTRUCTING SPECIAL REACTION BLOCKS AND/OR MODIFYING HIS CONSTRUCTION METHODS.
9. NO BLASTING WILL BE ALLOWED ON THIS PROJECT.
10. THE CONTRACTOR SHALL PROTECT EXISTING PUBLIC AND PRIVATE FACILITIES AND UTILITIES, AND PROVIDE SHORING DURING EXCAVATION. THE CONTRACTOR SHALL REPAIR, AT HIS COST, ALL DAMAGES DUE TO EXCAVATION.
11. THE CONTRACTOR SHALL COORDINATE WITH ASPA, ASC, BLUESKY COMMUNICATIONS AND ASTCA FOR ALL NEW POLE INSTALLATION, POWER, TELEVISION AND COMMUNICATIONS RELOCATIONS, AND REMOVAL OF EXISTING POLES. IF THE CONTRACTOR SHALL PROVIDE RELOCATIONS, REMOVAL OF EXISTING POLES. THE CONTRACTOR SHALL PROVIDE SUPPORTS FOR THE EXISTING POLES AFFECTED BY EXCAVATION. THE CONTRACTOR SHALL NOTIFY AFFECTED VILLAGES AND THE UTILITY COMPANIES SEVEN (7) DAYS PRIOR TO SERVICE INTERRUPTIONS. THESE NOTIFICATIONS SHALL BE AT THE CONVENIENCE OF ASPA, ASC, BLUESKY COMMUNICATION AND ASTCA.
12. THE CONTRACTOR SHALL PROVIDE ALL LAND SURVEY CONSTRUCTION STAKEOUT SERVICES, SOIL AGGREGATE, CONCRETE AND PAVEMENT MONITORING, AND SAMPLING AND TESTING SERVICES.
13. WASTE MATERIAL WILL BE DISPOSED OF AT AN APPROVED, PNRS-COMPLIANT, OFF-SITE DISPOSAL AREA. THE CONTRACTOR SHALL BE RESPONSIBLE FOR OBTAINING DISPOSAL AREA.
14. THE CONTRACTOR SHALL TAKE EXTREME CARE IN PERFORMING WORK NEAR EXISTING CONCRETE ELECTRICAL/COMMUNICATION DUCTS. APPROPRIATE PROTECTION SHALL BE IMPLEMENTED AS REQUIRED TO PREVENT DAMAGE TO THIS LINE.
15. THE CONTRACTOR SHALL VERIFY, BASED ON THE SITE CONDITIONS AND CONTRACT BASELINE DATA, WITH OVERVIEW AND APPROVAL BY AN AUTHORIZED REPRESENTATIVE OF AMERICAN SAMOA POWER AUTHORITY, THE LOCATION OF ALL EXISTING POLES WHICH IMPACT THE CONSTRUCTION AND ULTIMATE USE OF THE PROPOSED ROAD.
16. THE CONTRACTOR SHALL VERIFY, BASED ON OVERVIEW AND APPROVAL BY AUTHORIZED REPRESENTATIVE OF AMERICAN SAMOA GOVERNMENT OFFICE OF COMMUNICATIONS, THE LOCATIONS AND DEPTH OF EXISTING UNDERGROUND TELEPHONE CABLES. RELOCATE EXISTING DIRECT BURIED CABLES WHICH IMPACT THE CONSTRUCTION AND FINAL USE OF THE PROPOSED ROAD. EITHER INTO A NEW TRENCH AWAY FROM THE ROAD OR IN PVC SCHEDULE80 SLEEVES THROUGH THE ROAD AT A MINIMUM DEPTH OF 3' BELOW FINISHED GRADE IF THE CABLES CANNOT BE RELOCATED. TO EXPOSE THE CABLE, THE CONTRACTOR SHALL TONE FOR THE CABLE AND HAND EXCAVATE THE CABLE TAKING CARE NOT TO DAMAGE THE JACKET AND INSULATION. BASIS OF BID SHALL BE 100 LINEAR FEET OF DIRECT BURIED CABLE.
17. THE CONTRACTOR SHALL REMOVE ALL EXISTING PAVEMENT AND CROSSING ALONG THE NEW ROADWAY. ALL DEMOLITION AND REMOVAL OF EXISTING PAVEMENT SHALL BE CONSIDERED INCIDENTAL TO ROADWAY CONSTRUCTION.
18. ALL TRAFFIC SIGN AND PAVEMENT MARKERS SHALL BE IN ACCORDANCE WITH THE MANUAL ON UNIFORM TRAFFIC CONTROL DEVICES (MUTCD) 2003 EDITION, AND ALL SUBSEQUENT AMENDMENTS AND ADDITIONS.
19. AT THE END OF THE WORKDAY OR AS SOON AS WORK IS COMPLETED, THE CONTRACTOR SHALL TAKE NECESSARY MEASURES TO ENSURE THAT PUBLIC TRAFFIC HAS SAFE PASSAGE AND THAT ALL OPEN HOLES ARE PROPERLY COVERED AND MAINTAINED DURING THE DURATION OF THE PROJECT.
20. IF THE CONTRACTOR UNCOVERS ANY CULTURAL REMAINS, DURING EXCAVATION WORK, THE CONTRACTOR SHALL STOP WORK IN THE AREA OF THE FINDINGS AND NOTIFY THE CONTRACTING OFFICER AND THE AMERICAN SAMOA GOVERNMENT (ASHPO AND ASPA)

No.	Description	Date

REV. NO.:	
REVISION:	
CHECKED BY:	
APPROVED BY:	
DATE:	

DESIGNED BY:	FToala
CHECKED BY:	LTyrell
APPROVED BY:	FAguila / LTyrell
ISSUE FOR:	Construction

AMERICAN SAMOA POWER AUTHORITY
ENGINEERING SERVICES DIVISION
P.O.BOX PPB, TAFUNA, PAGO PAGO, AS 96799

PROJECT NAME:	AOLOAU 6"Ø WATERLINE REPLACEMENT PROJECT
DRAWING TITLE:	CONSTRUCTION NOTES
PROJECT LOCATION:	AOLOAU VILLAGE, AMERICAN SAMOA
SCALE:	AS SHOWN
PROJECT NO:	#1958785
DATE:	APRIL 2023
SIGNATURE:	
DATE:	
SHEET NO.	G4

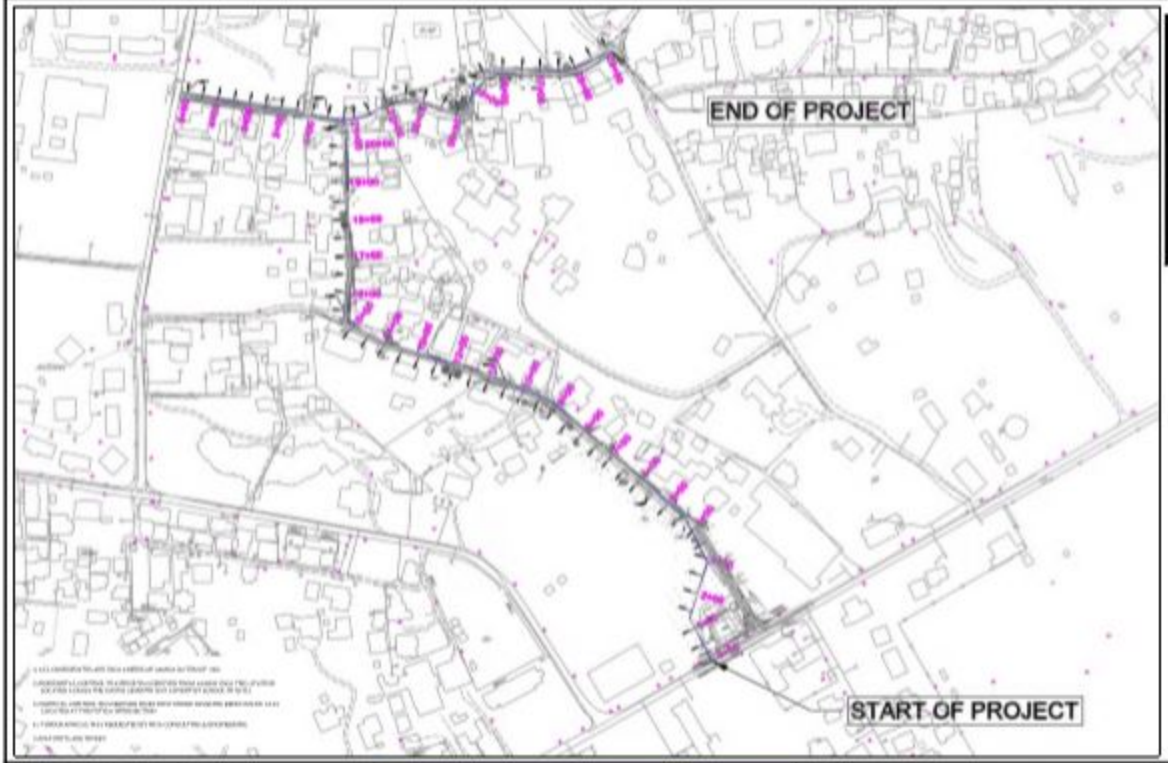

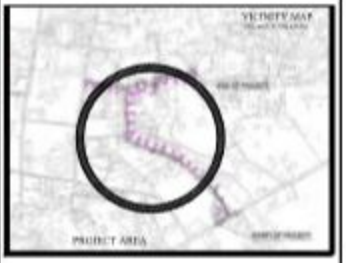

LEGEND:

PREPARED BY: PETER JAMES CHIN	PROJECT NAME: HDPE PIPE UPGRADE & REPLACEMENT PROJECT – COST-U-LESS RD	REVISION HISTORY: NO. / DATE / DETAILS OF REVISION / REVISED BY	SCALE: AS SHOWN
CHECKED BY: WILLIAM SPITZENBERG, P.E.	DRAWING TITLE: PLAN AND PROFILE KEYPLAN		PROJECT #:
APPROVED BY: WILLIAM SPITZENBERG, P.E.	PROJECT LOCATION: IULIU, AS 96799		SHEET NO. 13 / 35
ISSUE FOR: CONSTRUCTION			

PIOA CONSULTING
"Precision*Ingenuity*Outstanding*Authentic"

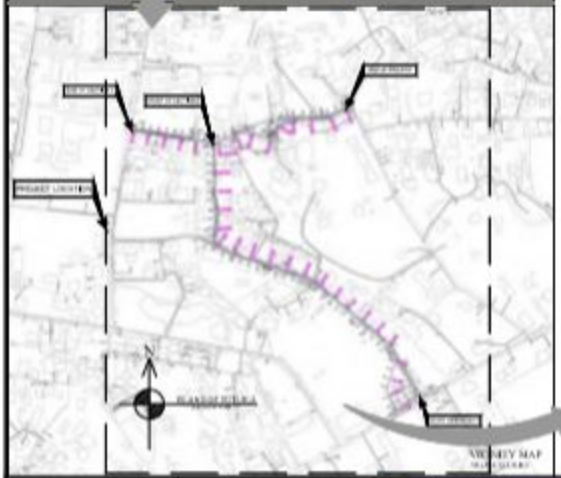

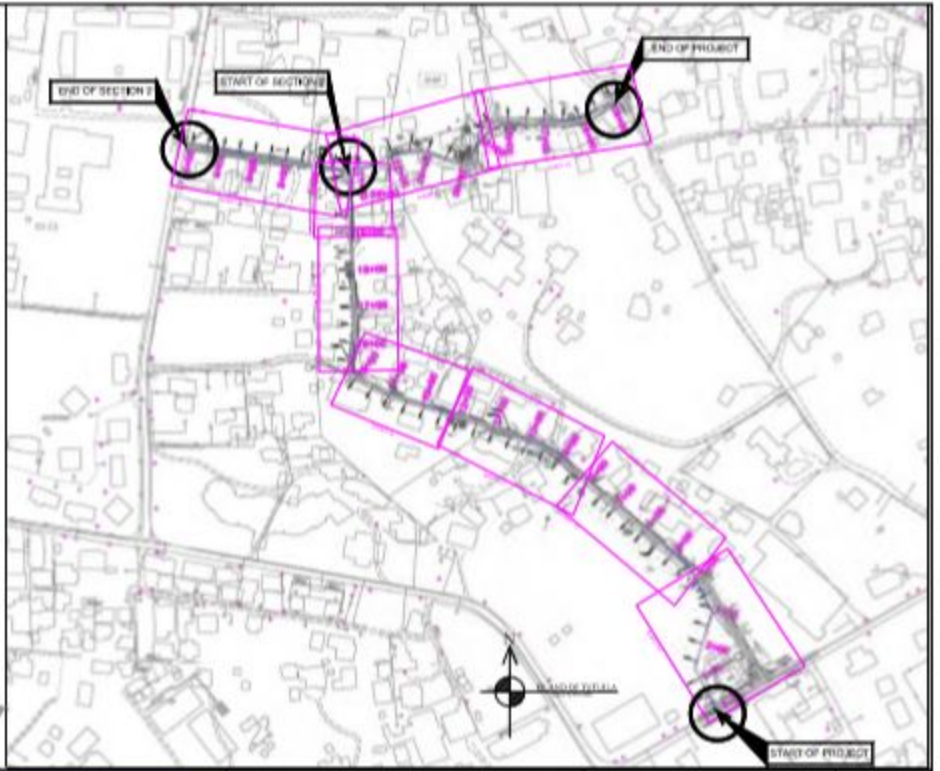

PREPARED BY: PETER JAMES CHIN	PROJECT NAME: HDPE PIPE UPGRADE & REPLACEMENT PROJECT – COST-U-LESS RD	REVISION HISTORY: NO. / DATE / DETAILS OF REVISION / REVIEWED BY	SCALE: AS SHOWN
CHECKED BY: WILLIAM SPITZENBERG, P.E.	DRAWING TITLE: PLAN AND PROFILE MAIN SHEETS		PROJECT #:
APPROVED BY: WILLIAM SPITZENBERG, P.E.	PROJECT LOCATION: ILIILI, AS 96799		SHEET NO. 14 / 35
ISSUE FOR: CONSTRUCTION			

PIOA CONSULTING
"Precision*Ingenuity*Outstanding*Authentic"

NOTES:

1. DESIGN ALIGNMENT & PROFILE ARE APPROXIMATE.
2. CONTRACTOR SHALL LOCATE THRU POTHOLING ALL UNKNOWN UTILITIES/STRUCTURES PRIOR TO ANY EXCAVATION WORKS & SUBMIT TO APE FOR APPROVAL A MOST PRACTICAL ALIGNMENT & PROFILE BASE ON ACTUAL LOCATION OF UTILITIES WITHIN THE LIMIT OF ROW EASEMENT.
3. CONTRACTOR SHALL RESTORE TO THEIR ORIGINAL CONDITION ALL IMPROVEMENTS DAMAGED AS A RESULT OF THE CONSTRUCTION INCLUDING BUT NOT LIMITED TO PAVEMENTS, SIDEWALK, EMBANKMENTS, STORM DRAIN, SOAK-PIT, CURBS, GUTTERS, RAMPS, SIGNS, LANDSCAPING, STRUCTURES, UTILITIES, WALLS, FENCES, ETC. MATCH EXISTING AND TO THE SATISFACTION OF THE OWNER.
4. CONTRACTOR SHALL REMOVE/RELOCATE POWER/COMM. POLE AS NEEDED.
5. CONTRACTOR SHALL RECORD IN THE AS-BUILT ALL NEW AND EXISTING UTILITIES, STRUCTURES AND ALL APPURTENANCES DISCOVERED BEFORE AND DURING CONSTRUCTION.
6. CONTRACTOR SHALL SECURE ALL NECESSARY PERMIT PRIOR TO ANY EXCAVATION WORKS.
7. CONTRACTOR TO SECURE ROW APPROVAL PRIOR TO ANY SITE CLEARING & EXCAVATION.

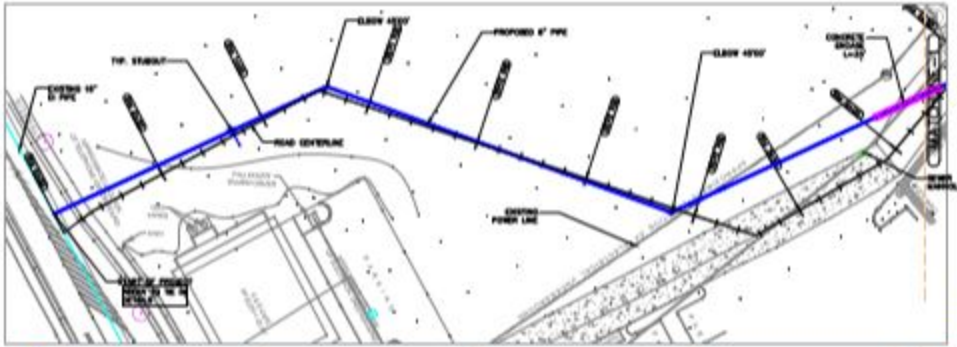

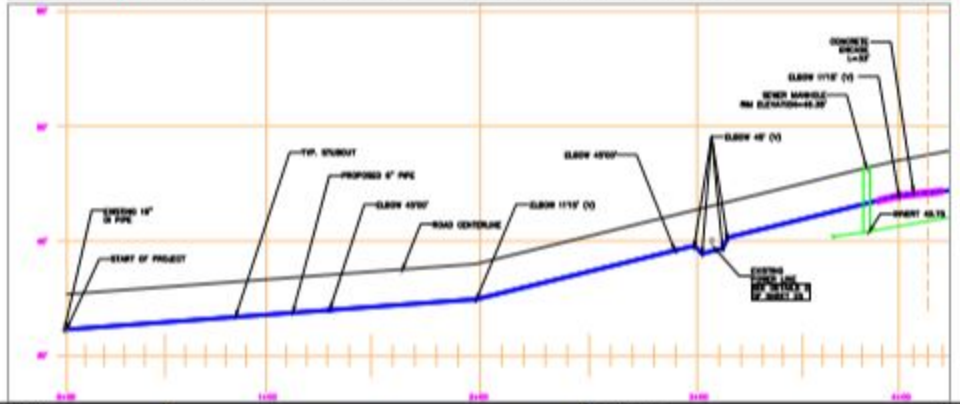

SCALE IN FEET 1" = 40'
VERTICAL EXAGERATION = 5

LEGEND:

- EXIST. WATERMAIN
- EXIST. 6" PVC WATERMAIN
- EXIST. WATER SERVICE LINE
- EXIST. SEWER GRAVITY MAIN
- EXIST. UNDERGROUND ASTCA
- SEWER MANHOLE
- UTILITY POLE W/ OVHD POWER LINE
- EXIST. WATER METER
- PROPOSED PVCO WATER MAIN
- PROP. 2" SERVICE LINE
- PROP. TEE-FITTINGS
- 11.25 ELBOW
- 22.50 ELBOW
- PROPOSED AIR RELIEF VALVE
- PROPOSED FIRE HYDRANT-PLAN
- PROPOSE GATE VALVE-PLAN

47583
WILLIAM E. SPITZENBERG
Expires 3/31/2023

PREPARED BY:
PETER JAMES CHIN

CHECKED BY:
WILLIAM SPITZENBERG, P.E.

APPROVED BY:
WILLIAM SPITZENBERG, P.E.

ISSUE FOR:
CONSTRUCTION

PIOA CONSULTING
"Precision*Ingenuity*Outstanding*Authentic"

PROJECT NAME:
HDPE PIPE UPGRADE & REPLACEMENT PROJECT – COST-U-LESS RD

DRAWING TITLE:
PLAN AND PROFILE SHEET 0+00 TO 4+20

PROJECT LOCATION:
IUIU, AS 96799

REVISION HISTORY:

NO.	DATE	DETAILS OF REVISION	REVISED BY

SCALE: AS SHOWN

PROJECT #:

SHEET NO.
15
35

NOTES:

1. DESIGN ALIGNMENT & PROFILE ARE APPROXIMATE.
2. CONTRACTOR SHALL LOCATE THRU POTHOLING ALL UNKNOWN UTILITIES/STRUCTURES PRIOR TO ANY EXCAVATION WORKS & SUBMIT TO A/E FOR APPROVAL A MOST PRACTICAL ALIGNMENT & PROFILE BASE ON ACTUAL LOCATION OF UTILITIES WITHIN THE LIMIT OF ROW EASEMENT.
3. CONTRACTOR SHALL RESTORE TO THEIR ORIGINAL CONDITION ALL IMPROVEMENTS DAMAGED AS A RESULT OF THE CONSTRUCTION INCLUDING BUT NOT LIMITED TO PAVEMENTS, SIDEWALK, EMBANKMENTS, STORM DRAIN, SOAK-PIT, CURBS, GUTTERS, RAMPS, SIGNS, LANDSCAPING, STRUCTURES, UTILITIES, WALLS, FENCES, ETC. MATCH EXISTING AND TO THE SATISFACTION OF THE OWNER.
4. CONTRACTOR SHALL REMOVE/RELOCATE POWER/COMM. POLE AS NEEDED.
5. CONTRACTOR SHALL RECORD IN THE AS-BUILT ALL NEW AND EXISTING UTILITIES, STRUCTURES AND ALL APPURTENANCES DISCOVERED BEFORE AND DURING CONSTRUCTION.
6. CONTRACTOR SHALL SECURE ALL NECESSARY PERMIT PRIOR TO ANY EXCAVATION WORKS.
7. CONTRACTOR TO SECURE ROW APPROVAL PRIOR TO ANY SITE CLEARING & EXCAVATION

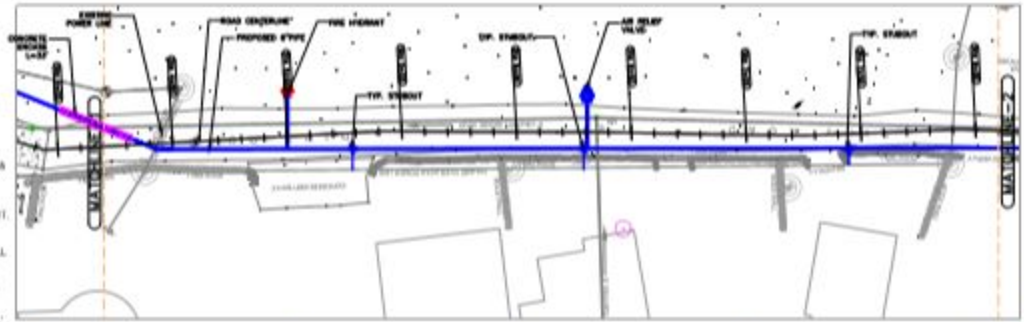

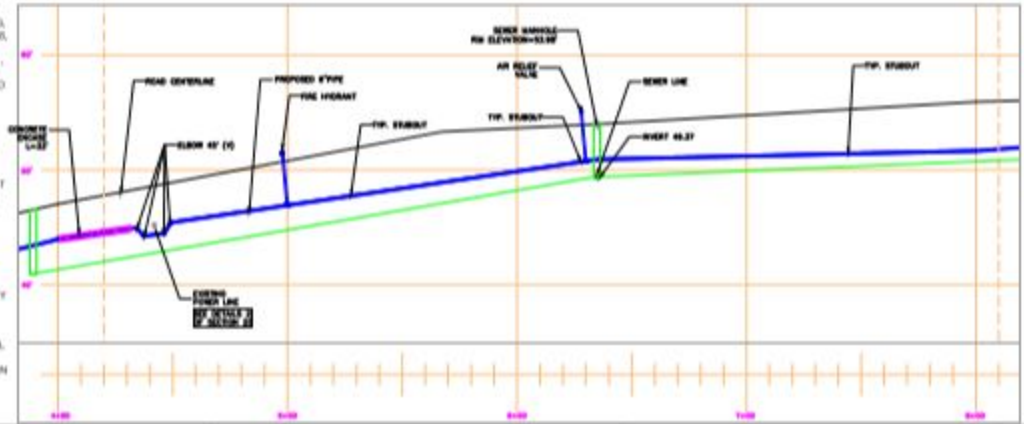

SCALE IN FEET 1" = 40'
VERTICAL EXAGERATION = 5

LEGEND:

- EXIST. WATERMAIN
- EXIST. 6" PVC WATERMAIN
- EXIST. WATER SERVICE LINE
- EXIST. SEWER GRAVITY MAIN
- EXIST. UNDERGROUND ASTCA
- SEWER MANHOLE
- UTILITY POLE W/ OVHD POWER LINE
- EXIST. WATER METER
- PROPOSED PVCO WATER MAIN
- PROP. 2" SERVICE LINE
- PROP. TEE-FITTINGS
- 11.25 ELBOW
- 22.50 ELBOW
- PROPOSED AIR RELIEF VALVE
- PROPOSED FIRE HYDRANT-PLAN
- PROPOSE GATE VALVE-PLAN

PREPARED BY: PETER JAMES OHN

CHECKED BY: WILLIAM SPITZENBERG, P.E.

APPROVED BY: WILLIAM SPITZENBERG, P.E.

ISSUE FOR: CONSTRUCTION

PIOA CONSULTING
"Precision*Ingenuity*Outstanding*Authentic"

PROJECT NAME: HOPE PIPE UPGRADE & REPLACEMENT PROJECT – COST-U-LESS RD

DRAWING TITLE: PLAN AND PROFILE SHEET 4+20 TO 8+10

PROJECT LOCATION: IULI, AS 96799

REVISION HISTORY:			
NO.	DATE	DETAILS OF REVISION	REVISED BY

SCALE: AS SHOWN

PROJECT #:

SHEET NO. 16 / 35

NOTES:

1. DESIGN ALIGNMENT & PROFILE ARE APPROXIMATE.
2. CONTRACTOR SHALL LOCATE THRU POTHOLING ALL UNKNOWN UTILITIES/STRUCTURES PRIOR TO ANY EXCAVATION WORKS & SUBMIT TO APS FOR APPROVAL A MOST PRACTICAL ALIGNMENT & PROFILE BASE ON ACTUAL LOCATION OF UTILITIES WITHIN THE LIMIT OF ROW EASEMENT.
3. CONTRACTOR SHALL RESTORE TO THEIR ORIGINAL CONDITION ALL IMPROVEMENTS DAMAGED AS A RESULT OF THE CONSTRUCTION INCLUDING BUT NOT LIMITED TO PAVEMENTS, SIDEWALK, EMBANKMENTS, STORM DRAIN, BOAR-PIT, CURBS, GUTTERS, RAMPS, SIGNS, LANDSCAPING, STRUCTURES, UTILITIES, WALLS, FENCES, ETC. MATCH EXISTING AND TO THE SATISFACTION OF THE OWNER.
4. CONTRACTOR SHALL REMOVE/RELOCATE POWER/COMM. POLE AS NEEDED.
5. CONTRACTOR SHALL RECORD IN THE AS-BUILT ALL NEW AND EXISTING UTILITIES, STRUCTURES AND ALL APPURTENANCES DISCOVERED BEFORE AND DURING CONSTRUCTION.
6. CONTRACTOR SHALL SECURE ALL NECESSARY PERMIT PRIOR TO ANY EXCAVATION WORKS.
7. CONTRACTOR TO SECURE ROW APPROVAL PRIOR TO ANY SITE CLEARING & EXCAVATION.

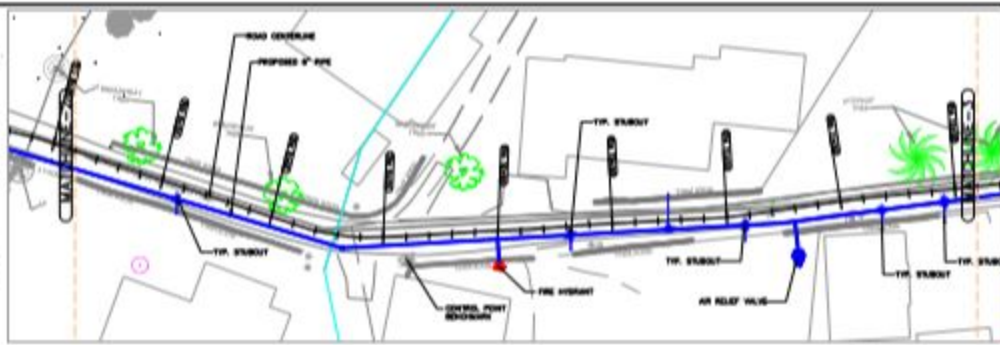

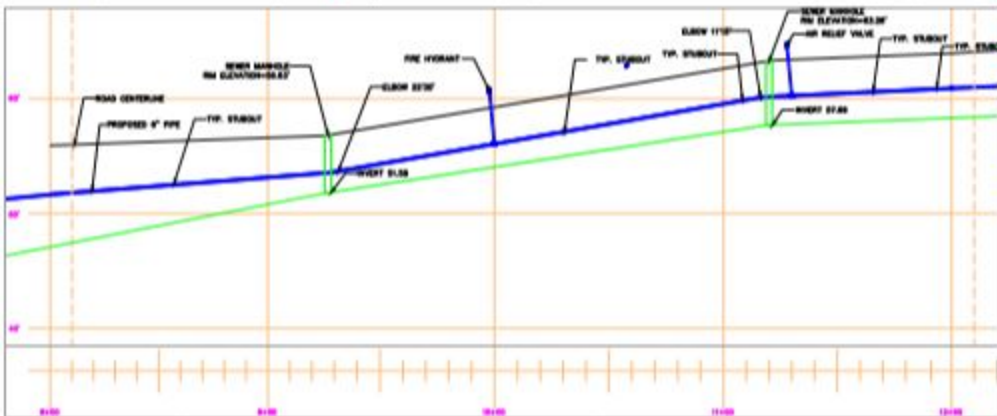

SCALE IN FEET 1" = 40'
VERTICAL EXAGERATION = 5

LEGEND:

- EXIST. WATERMAIN
- EXIST. 6" PVC WATERMAIN
- EXIST. WATER SERVICE LINE
- EXIST. SEWER GRAVITY MAIN
- EXIST. UNDERGROUND ASTCA
- SEWER MANHOLE
- UTILITY POLE W/ OVHD POWER LINE
- EXIST. WATER METER
- PROPOSED PVCO WATER MAIN
- PROP. 2" SERVICE LINE
- PROP. TEE-FITTINGS
- 11.25 ELBOW
- 22.50 ELBOW
- PROPOSED AIR RELIEF VALVE
- PROPOSED FIRE HYDRANT-PLAN
- PROPOSE GATE VALVE-PLAN

Registered Professional Engineer (Civil Construction)
47580
WILLIAM E. SPITZENBERG
U.S.A.
Expiration 3-31-2023

PREPARED BY:
PETER JAMES OHN

CHECKED BY:
WILLIAM SPITZENBERG, P.E.

APPROVED BY:
WILLIAM SPITZENBERG, P.E.

ISSUE FOR:
CONSTRUCTION

PIOA CONSULTING
"Precision*Ingenuity*Outstanding*Authentic"

PROJECT NAME:
HOPE PIPE UPGRADE & REPLACEMENT PROJECT – COST-U-LESS RD

DRAWING TITLE:
PLAN AND PROFILE SHEET 8+10 TO 12+10

PROJECT LOCATION:
IULI, AS 96799

REVISION HISTORY:

NO.	DATE	DETAILS OF REVISION	REVISED BY

SCALE: AS SHOWN

PROJECT #:

SHEET NO.: 17 / 35

NOTES:

1. DESIGN ALIGNMENT & PROFILE ARE APPROXIMATE.
2. CONTRACTOR SHALL LOCATE THRU POTHOLING ALL UNKNOWN UTILITIES/STRUCTURES PRIOR TO ANY EXCAVATION WORKS & SUBMIT TO APE FOR APPROVAL A MOST PRACTICAL ALIGNMENT & PROFILE BASE ON ACTUAL LOCATION OF UTILITIES WITHIN THE LIMIT OF ROW EASEMENT.
3. CONTRACTOR SHALL RESTORE TO THEIR ORIGINAL CONDITION ALL IMPROVEMENTS DAMAGED AS A RESULT OF THE CONSTRUCTION INCLUDING BUT NOT LIMITED TO PAVEMENTS, SIDEWALK, EMBANKMENTS, STORM DRAIN, SOAK PIT, CURBS, GUTTERS, RAMPS, SIGNS, LANDSCAPING, STRUCTURES, UTILITIES, WALLS, FENCES, ETC. MATCH EXISTING AND TO THE SATISFACTION OF THE OWNER.
4. CONTRACTOR SHALL REMOVE/RELOCATE POWER/COMM POLE AS NEEDED.
5. CONTRACTOR SHALL RECORD IN THE AS-BUILT ALL NEW AND EXISTING UTILITIES, STRUCTURES AND ALL APPURTENANCES DISCOVERED BEFORE AND DURING CONSTRUCTION.
6. CONTRACTOR SHALL SECURE ALL NECESSARY PERMIT PRIOR TO ANY EXCAVATION WORKS.
7. CONTRACTOR TO SECURE ROW APPROVAL PRIOR TO ANY SITE CLEARING & EXCAVATION

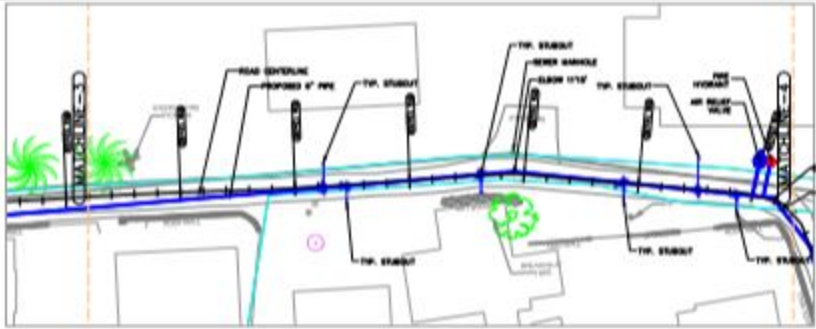

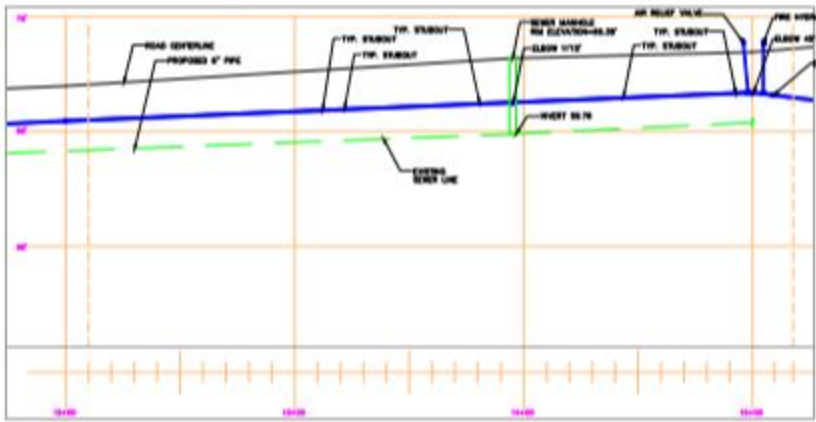

SCALE IN FEET 1" = 40'
VERTICAL EXAGERATION = 5

LEGEND:

- EXIST. WATERMAIN
- EXIST. 6" PVC WATERMAIN
- EXIST. WATER SERVICE LINE
- EXIST. SEWER GRAVITY MAIN
- EXIST. UNDERGROUND ASTCA
- SEWER MANHOLE
- UTILITY POLE W/ OVHD POWER LINE
- EXIST. WATER METER
- PROPOSED PVCO WATER MAIN
- PROP. 2" SERVICE LINE
- PROP. TEE-FITTINGS
- 11.25 ELBOW
- 22.50 ELBOW
- PROPOSED AIR RELIEF VALVE
- PROPOSED FIRE HYDRANT-PLAN
- PROPOSE GATE VALVE-PLAN

PREPARED BY:	PETER JAMES CHIN
CHECKED BY:	WILLIAM SPITZENBERG, P.E.
APPROVED BY:	WILLIAM SPITZENBERG, P.E.
ISSUE FOR:	CONSTRUCTION

PIOA CONSULTING
"Precision*Ingenuity*Outstanding*Authentic"

PROJECT NAME: HDPE PIPE UPGRADE & REPLACEMENT PROJECT – COST-U-LESS RD

DRAWING TITLE: PLAN AND PROFILE SHEET 12+10 TO 15+20

PROJECT LOCATION: IULI, AS 96799

REVISION HISTORY

NO.	DATE	DETAILS OF REVISION	REVISED BY

SCALE: AS SHOWN

PROJECT #:

SHEET NO. 18 / 35

NOTES:

1. DESIGN ALIGNMENT & PROFILE ARE APPROXIMATE.
2. CONTRACTOR SHALL LOCATE THRU POTHOLING ALL UNKNOWN UTILITIES/STRUCTURES PRIOR TO ANY EXCAVATION WORKS & SUBMIT TO A/E FOR APPROVAL & MOST PRACTICAL ALIGNMENT & PROFILE BASE ON ACTUAL LOCATION OF UTILITIES WITHIN THE LIMIT OF ROW EASEMENT.
3. CONTRACTOR SHALL RESTORE TO THEIR ORIGINAL CONDITION ALL IMPROVEMENTS DAMAGED AS A RESULT OF THE CONSTRUCTION INCLUDING BUT NOT LIMITED TO PAVEMENTS, SIDEWALK, EMBANKMENTS, STORM DRAIN, SOAK-PIT, CURBS, GUTTERS, RAMPS, SIGNS, LANDSCAPING, STRUCTURES, UTILITIES, WALLS, FENCES, ETC. MATCH EXISTING AND TO THE SATISFACTION OF THE OWNER.
4. CONTRACTOR SHALL REMOVE/RELOCATE POWER/COMM. POLE AS NEEDED.
5. CONTRACTOR SHALL RECORD IN THE AS-BUILT ALL NEW AND EXISTING UTILITIES, STRUCTURES AND ALL APPURTENANCES DISCOVERED BEFORE AND DURING CONSTRUCTION.
6. CONTRACTOR SHALL SECURE ALL NECESSARY PERMIT PRIOR TO ANY EXCAVATION WORKS.
7. CONTRACTOR TO SECURE ROW APPROVAL PRIOR TO ANY SITE CLEARING & EXCAVATION

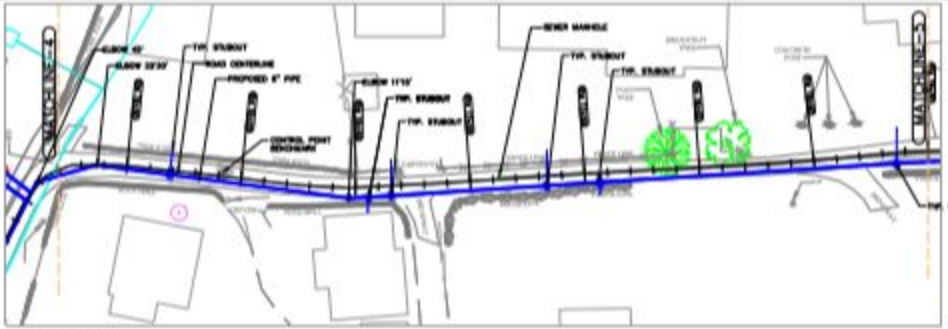

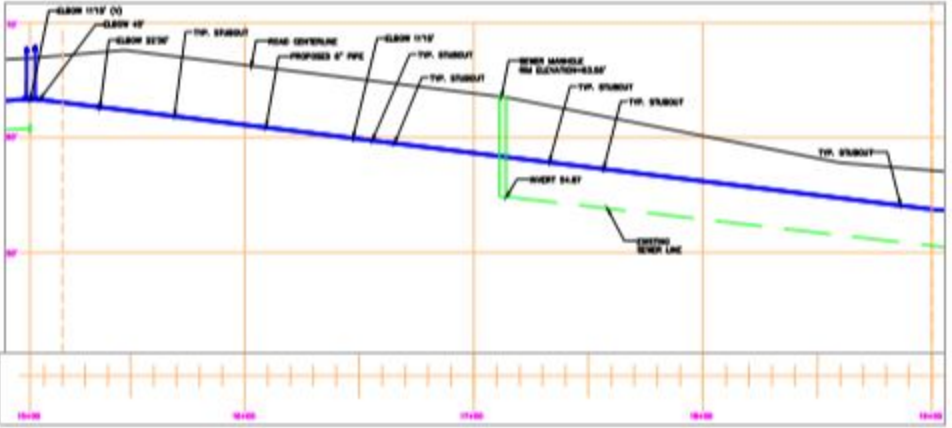

SCALE IN FEET 1" = 40'
VERTICAL EXAGERATION = 5

LEGEND:

- EXIST. WATERMAIN
- EXIST. 6" PVC WATERMAIN
- EXIST. WATER SERVICE LINE
- EXIST. SEWER GRAVITY MAIN
- EXIST. UNDERGROUND ASTCA
- SEWER MANHOLE
- UTILITY POLE W/ OVHD POWER LINE
- EXIST. WATER METER
- PROPOSED PVCO WATER MAIN
- PROP. 2" SERVICE LINE
- PROP. TEE-FITTINGS
- 11.25 ELBOW
- 22.50 ELBOW
- PROPOSED AIR RELIEF VALVE
- PROPOSED FIRE HYDRANT-PLAN
- PROPOSE GATE VALVE-PLAN

47553 WILLIAM E. SPITZENBERG	PREPARED BY: PETER JAMES CHIN	PIOA CONSULTING "Precision*Ingenuity*Outstanding*Authentic"	PROJECT NAME: HDPE PIPE UPGRADE & REPLACEMENT PROJECT – COST-U-LESS RD	REVISION HISTORY: NO. / DATE / DETAILS OF REVISION / REVIED BY
	CHECKED BY: WILLIAM SPITZENBERG, P.E.		DRAWING TITLE: PLAN AND PROFILE SHEET 15+20 TO 19+00	
	APPROVED BY: WILLIAM SPITZENBERG, P.E.		PROJECT LOCATION: IJUJ, AS 96799	
	ISSUE FOR: CONSTRUCTION			

SCALE: AS SHOWN
PROJECT #
SHEET NO. 19 / 35

NOTES:

1. DESIGN ALIGNMENT & PROFILE ARE APPROXIMATE.
2. CONTRACTOR SHALL LOCATE THRU POTHOLING ALL UNKNOWN UTILITIES/STRUCTURES PRIOR TO ANY EXCAVATION WORKS & SUBMIT TO APE FOR APPROVAL A MOST PRACTICAL ALIGNMENT & PROFILE BASE ON ACTUAL LOCATION OF UTILITIES WITHIN THE LIMIT OF ROW EASEMENT.
3. CONTRACTOR SHALL RESTORE TO THEIR ORIGINAL CONDITION ALL IMPROVEMENTS DAMAGED AS A RESULT OF THE CONSTRUCTION INCLUDING BUT NOT LIMITED TO PAVEMENTS, SIDEWALK, EMBANKMENTS, STORM DRAIN, SOAK PIT, CURBS, GUTTERS, NAMES, SIGNS, LANDSCAPING, STRUCTURES, UTILITIES, WALLS, FENCES, ETC. MATCH EXISTING AND TO THE SATISFACTION OF THE OWNER.
4. CONTRACTOR SHALL REMOVE/RELOCATE POWER/COMM POLE AS NEEDED.
5. CONTRACTOR SHALL RECORD IN THE AS-BUILT ALL NEW AND EXISTING UTILITIES, STRUCTURES AND ALL APPURTENANCES DISCOVERED BEFORE AND DURING CONSTRUCTION.
6. CONTRACTOR SHALL SECURE ALL NECESSARY PERMIT PRIOR TO ANY EXCAVATION WORKS.
7. CONTRACTOR TO SECURE ROW APPROVAL PRIOR TO ANY SITE CLEARING & EXCAVATION

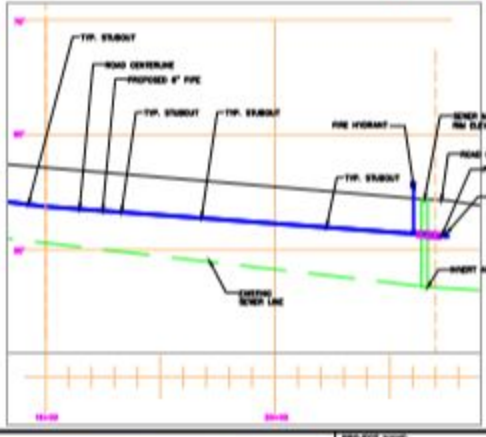

SCALE IN FEET 1" = 40'
VERTICAL EXAGERATION = 5

LEGEND:

- EXIST. WATERMAIN
- EXIST. 6" PVC WATERMAIN
- EXIST. WATER SERVICE LINE
- EXIST. SEWER GRAVITY MAIN
- EXIST. UNDERGROUND ASTCA
- SEWER MANHOLE
- UTILITY POLE W/ OVHD POWER LINE
- EXIST. WATER METER
- PROPOSED PVCO WATER MAIN
- PROP. 2" SERVICE LINE
- PROP. TEE-FITTINGS
- 11.25 ELBOW
- 22.50 ELBOW
- PROPOSED AIR RELIEF VALVE
- PROPOSED FIRE HYDRANT-PLAN
- PROPOSE GATE VALVE-PLAN

Registered Professional Engineer CERTIFICATE NO. 47580 WILLIAM E. SPITZENBERG STATE OF HAWAII U.S.A. Expires 4/30/2023	PREPARED BY: PETER JAMES CHIN CHECKED BY: WILLIAM SPITZENBERG, P.E. APPROVED BY: WILLIAM SPITZENBERG, P.E. ISSUE FOR: CONSTRUCTION	PIOA CONSULTING "Precision*Ingenuity*Outstanding*Authentic"	PROJECT NAME: HDPE PIPE UPGRADE & REPLACEMENT PROJECT – COST-U-LESS RD DRAWING TITLE: PLAN AND PROFILE SHEET 19+00 TO 20+70 PROJECT LOCATION: ILIILI, AS 96799	REVISION HISTORY: NO. / DATE / DETAILS OF REVISION / REVISED BY	SCALE: AS SHOWN PROJECT #: SHEET NO. 20 / 35

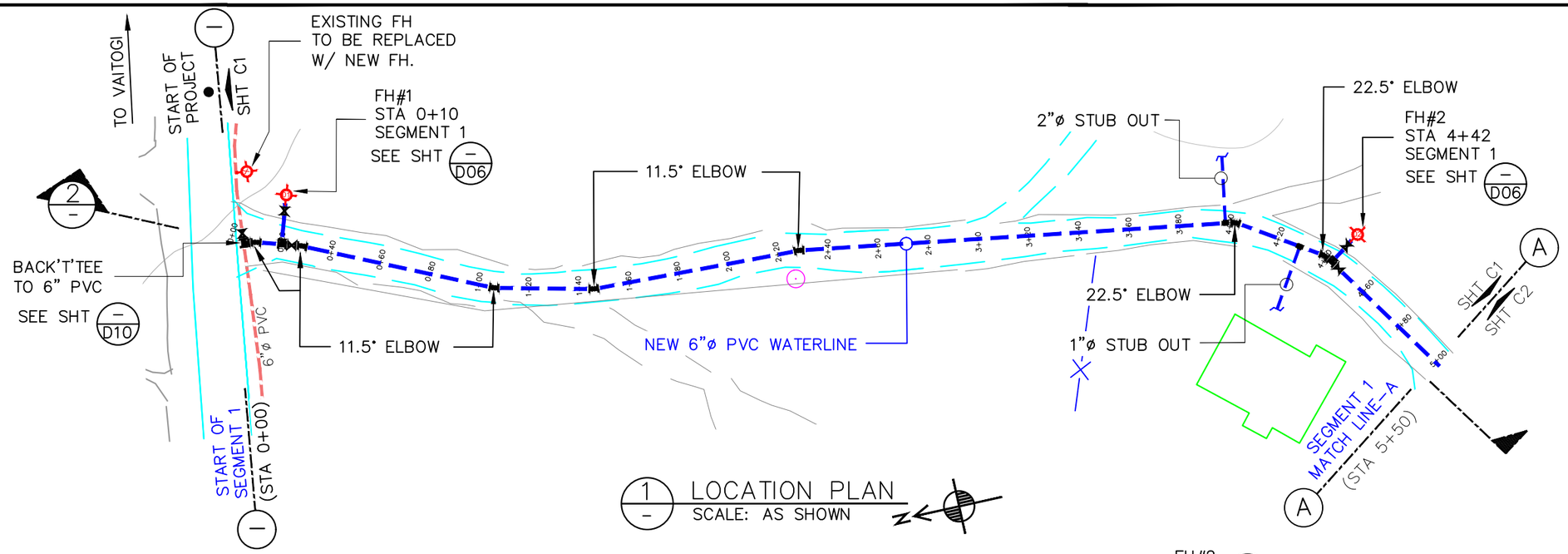

1 LOCATION PLAN
SCALE: AS SHOWN

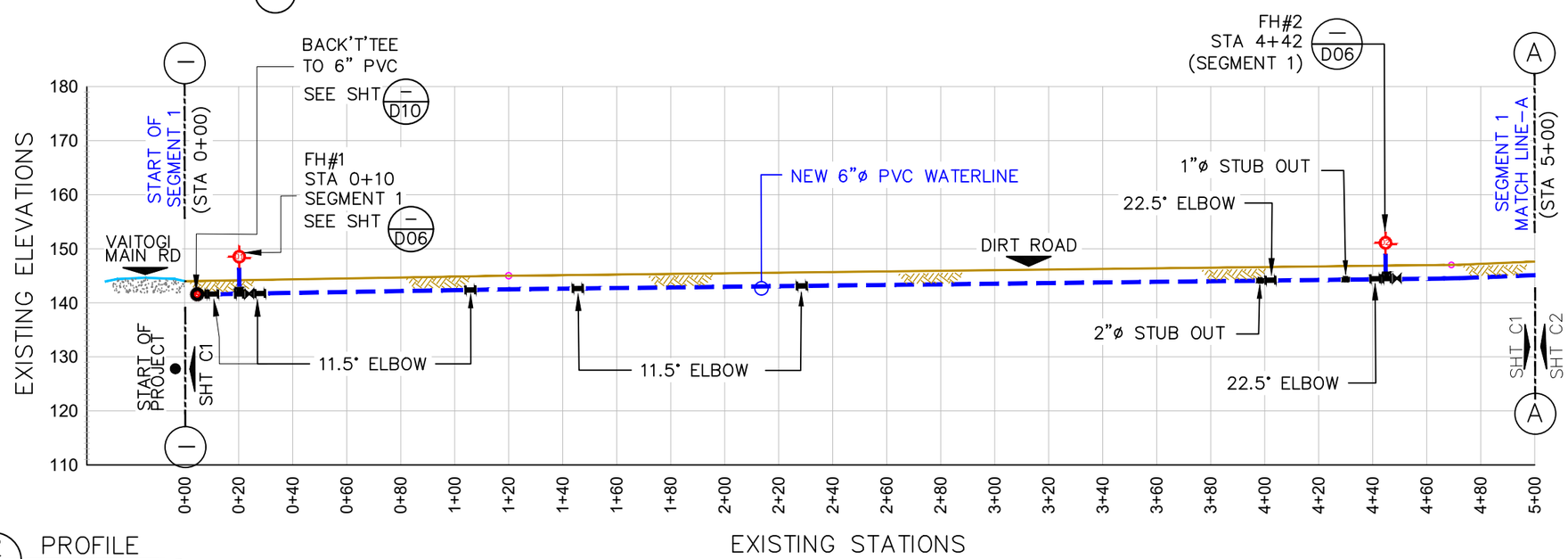

2 PROFILE
SCALE: AS SHOWN

LEGEND:

EXISTING WATER SERVICE:	
EXISTING ACP WATER:	
NEW 6ø" PVC WATER:	
TELEPHONE CONDUIT:	
EXISTING STORM DRAIN:	
EXISTING SEWER MAIN:	
GATE VALVE:	
POWER/TEL POLE:	
AIR RELIEVE VALVE:	
ELBOWS:	11.25° 22.5° 45° 90° BACK TEE
FIRE HYDRANT:	
BAC-T SAMPLING STN:	
SERVICE METER:	
STUB-OUT:	
PRV / PSV :	
EXISTING SERVICE LINE TRANSFERRED TO NEW LINE:	
TREES:	HEDGES:
ROCK WALL:	WIRE FENCE:

NOTES:
CONSTRUCTION CONTRACTOR SHALL FIELD VERIFY ALL EXISTING UNDERGROUND INFRASTRUCTURE TO ENSURE SAFETY OF ITS WORKERS AND AVOID ANY DAMAGES TO EXISTING GOVERNMENT UTILITIES.

ALL EXISTING FIRE HYDRANT TO BE TRANSFERRED TO NEW LINE. SEE SHT-D06 FOR FIRE HYDRANT CONNECTION DETAILS.

INSTALL 2"ø×6"ø SADDLE FOR NEW SERVICE CONNECTION @ EVERY 500 FEET

0 50' 100'
SCALE IN FEET
HORIZ. 1": 20'
0 40' 80'
SCALE IN FEET
VERT. 1": 20'

No.	Description	Date

REV. NO.:
REVISION:
CHECKED BY:
APPROVED BY:
DATE:

DESIGNED BY: F.Toala
CHECKED BY: L.Tyrell
APPROVED BY: F.Aquila / L.Tyrell
ISSUE FOR: Construction

ASPA
AMERICAN SAMOA POWER AUTHORITY
ENGINEERING SERVICES DIVISION
P.O.BOX PPB, TAFUNA, PAGO PAGO, AS 96799

PROJECT NAME: PHASE 3 VAITOGI HDPE PIPE REPLACEMENT WATERLINE PROJECT
DRAWING TITLE: SEGMENT 1 START PLAN & PROFILE (STA, 0+00 TO 5+00)
PROJECT LOCATION: VAITOGI VILLAGE, AMERICAN SAMOA

PROJECT NO: #1658785
SIGNATURE:
DATE:

SCALE: AS SHOWN
DATE: JAN-2024
SHEET NO. C01

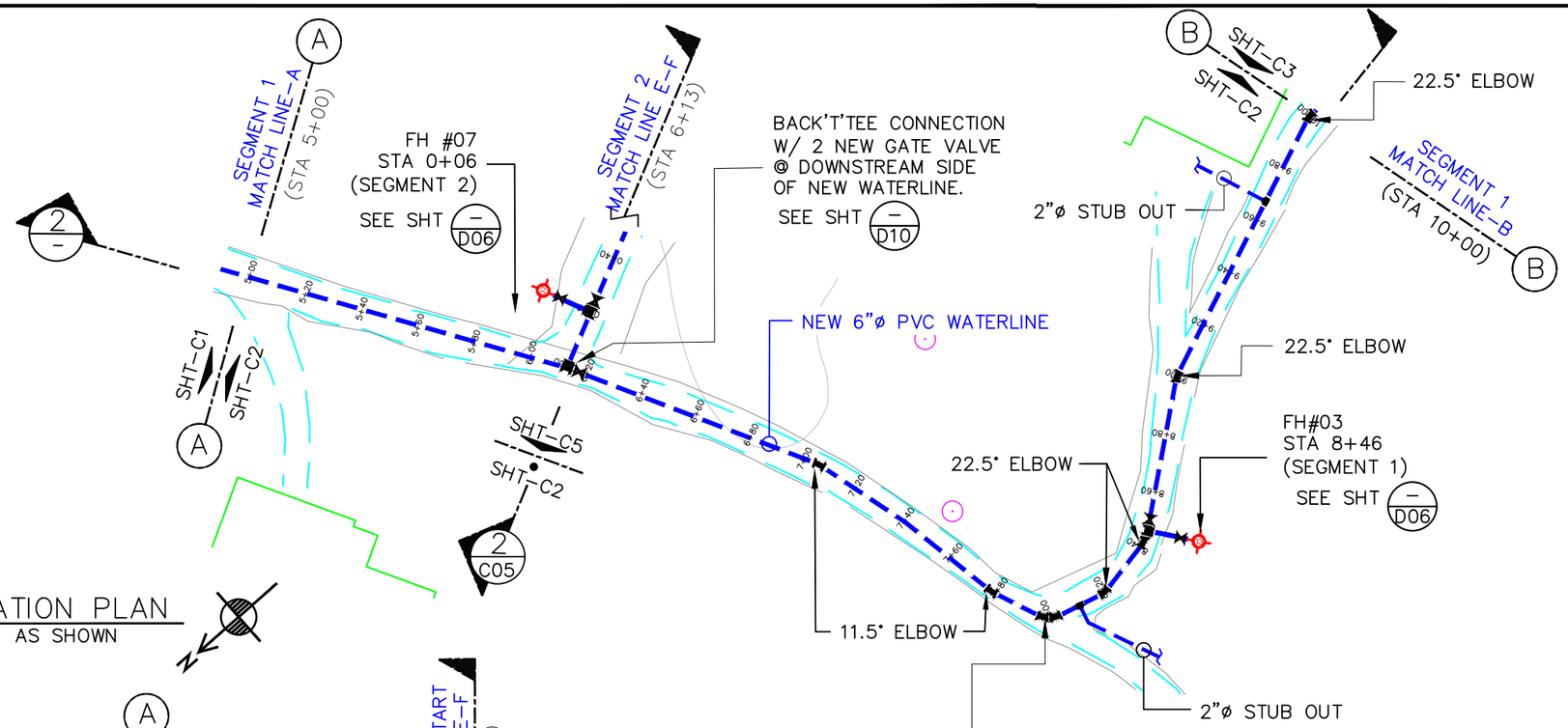

1 LOCATION PLAN
SCALE: AS SHOWN

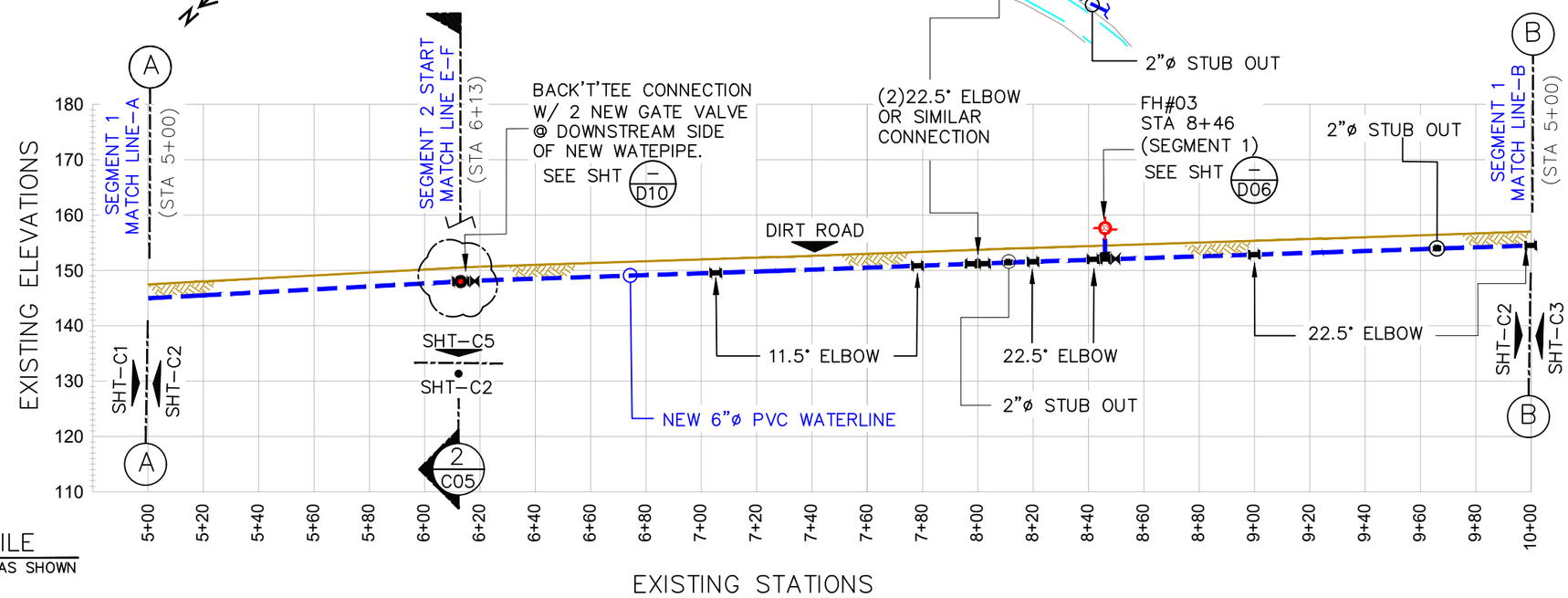

2 PROFILE
SCALE: AS SHOWN

LEGEND:

EXISTING WATER SERVICE:	
EXISTING ACP WATER:	
NEW 6ø" PVC WATER:	
TELEPHONE CONDUIT:	
EXISTING STORM DRAIN:	
EXISTING SEWER MAIN:	
GATE VALVE:	
POWER/TEL POLE:	
AIR RELIEVE VALVE:	
ELBOWS:	11.25° 22.5° 45° 90° BACK'T TEE
FIRE HYDRANT:	
BAC-T SAMPLING STN:	
SERVICE METER:	
STUB-OUT:	
PRV / PSV :	
EXISTING SERVICE LINE TRANSFERRED TO NEW LINE:	
TREES:	HEDGES:
ROCK WALL:	WIRE FENCE:

NOTES:
CONSTRUCTION CONTRACTOR SHALL FIELD VERIFY ALL EXISTING UNDERGROUND INFRASTRUCTURE TO ENSURE SAFETY OF ITS WORKERS AND AVOID ANY DAMAGES TO EXISTING GOVERNMENT UTILITIES.

ALL EXISTING FIRE HYDRANT TO BE TRANSFERRED TO NEW LINE.
SEE SHT-D06 FOR FIRE HYDRANT CONNECTION DETAILS.

INSTALL 2"ø×6"ø SADDLE FOR NEW SERVICE CONNECTION @ EVERY 500 FEET

0 50' 100'
SCALE IN FEET
HORIZ. 1": 20'

0 40' 80'
SCALE IN FEET
VERT. 1": 20'

No.	Description	Date

REV. NO.:
REVISION:
CHECKED BY:
APPROVED BY:
DATE:

DESIGNED BY: F.Toala
CHECKED BY: L.Tyrell
APPROVED BY: F.Aquila / L.Tyrell
ISSUE FOR: Construction

ASPA
AMERICAN SAMOA POWER AUTHORITY

AMERICAN SAMOA POWER AUTHORITY
ENGINEERING SERVICES DIVISION
P.O.BOX PPB, TAFUNA, PAGO PAGO, AS 96799

PROJECT NAME:
PHASE 3
VAITOGI HDPE PIPE REPLACEMENT
WATERLINE PROJECT

DRAWING TITLE:
SEGMENT 1
PLAN & PROFILE (STA, 5+00 TO 10+00)

PROJECT LOCATION:
VAITOGI VILLAGE, AMERICAN SAMOA

PROJECT NO: #1958785
SIGNATURE:
DATE:

SCALE: AS SHOWN
DATE: JAN-2024
SHEET NO. C02

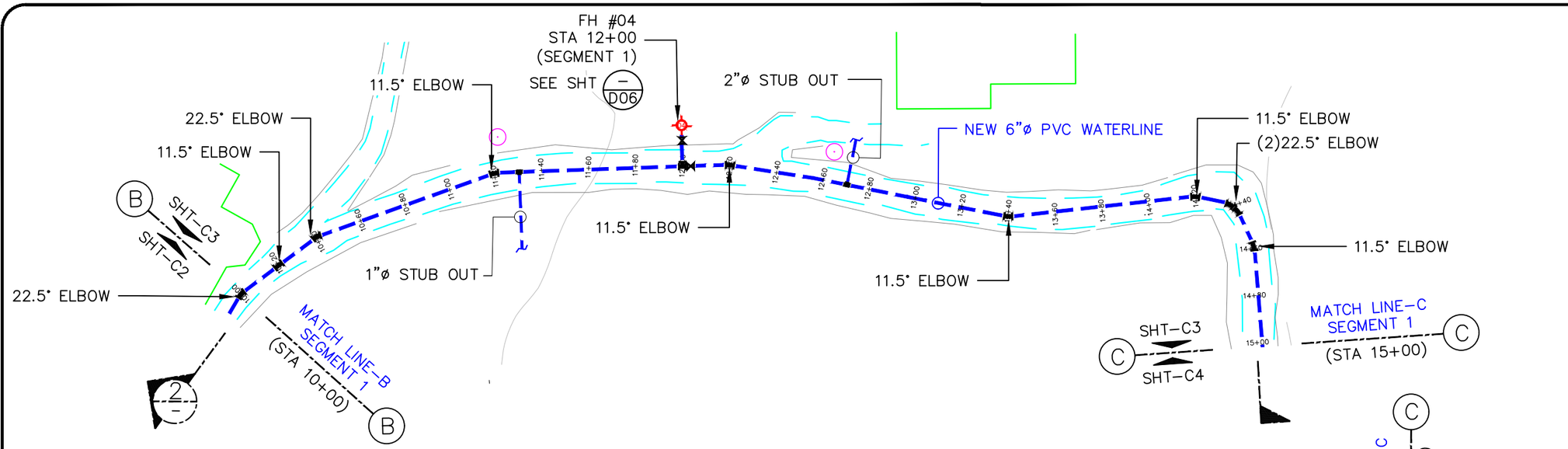

1 LOCATION PLAN
SCALE: AS SHOWN

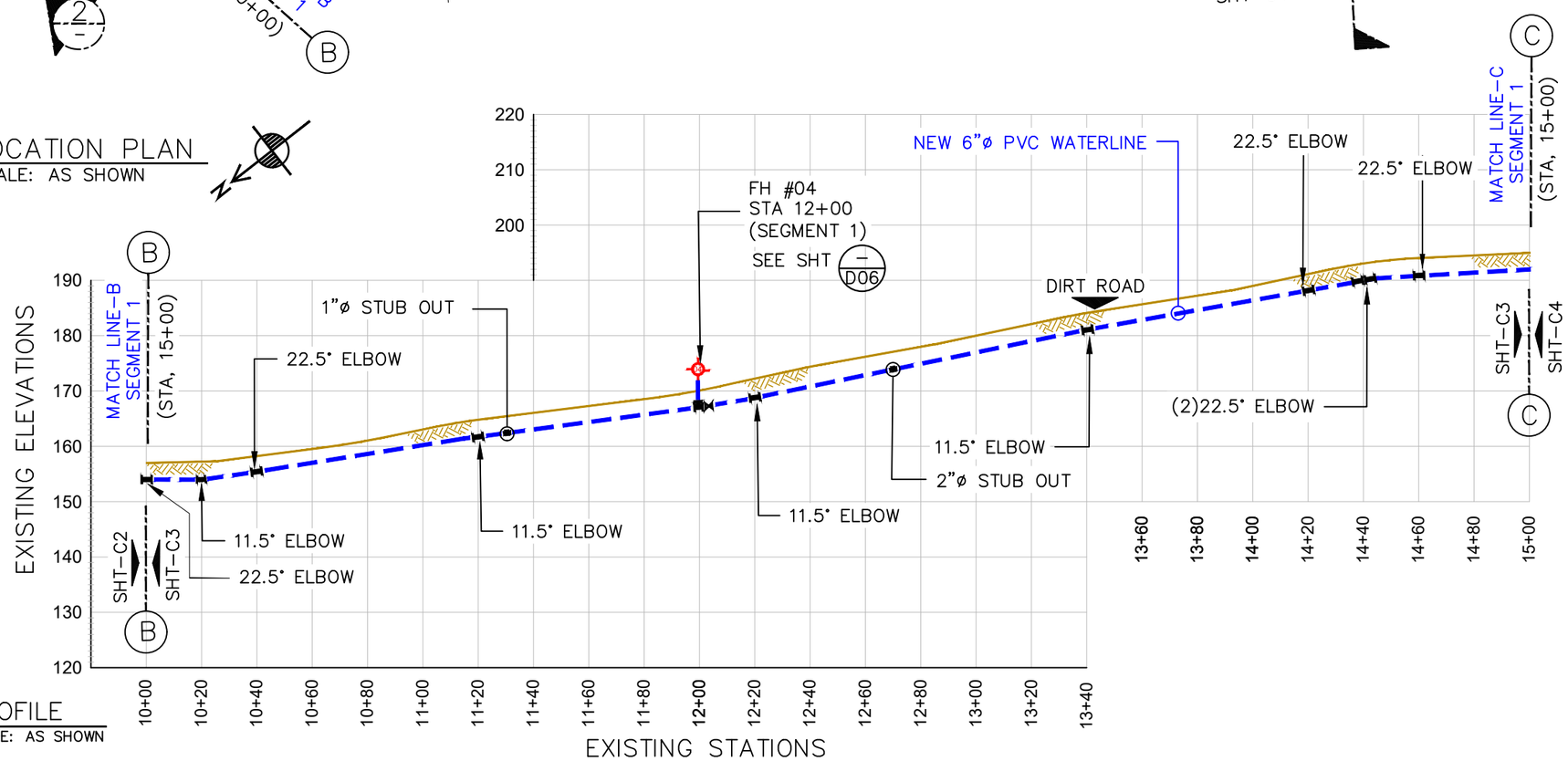

2 PROFILE
SCALE: AS SHOWN

LEGEND:

EXISTING WATER SERVICE:	
EXISTING ACP WATER:	
NEW 6ø" PVC WATER:	
TELEPHONE CONDUIT:	
EXISTING STORM DRAIN:	
EXISTING SEWER MAIN:	
GATE VALVE:	
POWER/TEL POLE:	
AIR RELIEVE VALVE:	
ELBOWS:	11.25° 22.5° 45° 90° BACK TEE
FIRE HYDRANT:	
BAC-T SAMPLING STN:	
SERVICE METER:	
STUB-OUT:	
PRV / PSV :	
EXISTING SERVICE LINE TRANSFERRED TO NEW LINE:	
TREES:	HEDGES:
ROCK WALL:	WIRE FENCE:

NOTES:
CONSTRUCTION CONTRACTOR SHALL FIELD VERIFY ALL EXISTING UNDERGROUND INFRASTRUCTURE TO ENSURE SAFETY OF ITS WORKERS AND AVOID ANY DAMAGES TO EXISTING GOVERNMENT UTILITIES.

ALL EXISTING FIRE HYDRANT TO BE TRANSFERRED TO NEW LINE.
SEE SHT-D06 FOR FIRE HYDRANT CONNECTION DETAILS.

INSTALL 2"øx6"ø SADDLE FOR NEW SERVICE CONNECTION @ EVERY 500 FEET

0 50' 100'
SCALE IN FEET
HORIZ. 1": 20'

0 40' 80'
SCALE IN FEET
VERT. 1": 20'

No.	Description	Date

REV. NO.:
REVISION:
CHECKED BY:
APPROVED BY:
DATE:

DESIGNED BY: F.Toala
CHECKED BY: L.Tyrell
APPROVED BY: F.Aquila / L.Tyrell
ISSUE FOR: Construction

ASPA
AMERICAN SAMOA POWER AUTHORITY

AMERICAN SAMOA POWER AUTHORITY
ENGINEERING SERVICES DIVISION
P.O.BOX PPB, TAFUNA, PAGO PAGO, AS 96799

PROJECT NAME:
PHASE 3
VAITOGI HDPE PIPE REPLACEMENT
WATERLINE PROJECT

DRAWING TITLE:
SEGMENT 1
PLAN & PROFILE (STA, 10+00 TO 15+00)

PROJECT LOCATION:
VAITOGI VILLAGE, AMERICAN SAMOA

PROJECT NO: #1658785
SIGNATURE:
DATE:

SCALE: AS SHOWN
DATE: JAN-2024
SHEET NO. C03

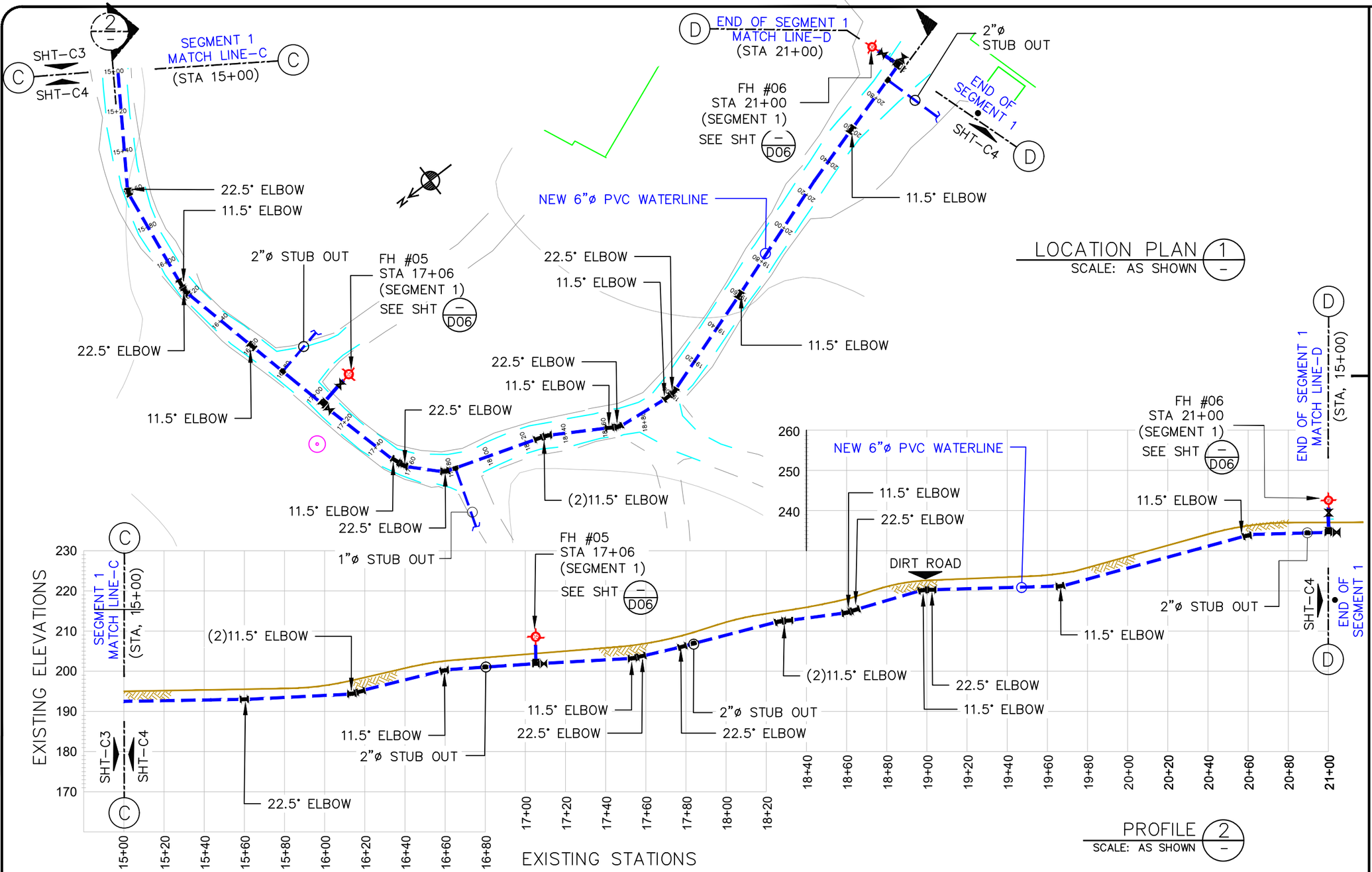

LEGEND:

EXISTING WATER SERVICE:	
EXISTING ACP WATER:	
NEW 6ø" PVC WATER:	
TELEPHONE CONDUIT:	
EXISTING STORM DRAIN:	
EXISTING SEWER MAIN:	
GATE VALVE:	
POWER/TEL POLE:	PP TP
AIR RELIEVE VALVE:	
ELBOWS:	11.25° 22.5° 45° 90° BACK TEE
FIRE HYDRANT:	
BAC-T SAMPLING STN:	
SERVICE METER:	
STUB-OUT:	
PRV / PSV :	
EXISTING SERVICE LINE TRANSFERRED TO NEW LINE:	
TREES:	HEDGES:
ROCK WALL:	WIRE FENCE:

NOTES:
CONSTRUCTION CONTRACTOR SHALL FIELD VERIFY ALL EXISTING UNDERGROUND INFRASTRUCTURE TO ENSURE SAFETY OF ITS WORKERS AND AVOID ANY DAMAGES TO EXISTING GOVERNMENT UTILITIES.

ALL EXISTING FIRE HYDRANT TO BE TRANSFERRED TO NEW LINE.
SEE SHT-D06 FOR FIRE HYDRANT CONNECTION DETAILS.

INSTALL 2"ø x 6"ø SADDLE FOR NEW SERVICE CONNECTION @ EVERY 500 FEET

0 50' 100'
SCALE IN FEET
HORIZ. 1": 20'

0 40' 80'
SCALE IN FEET
VERT. 1": 20'

No.	Description	Date

REV. NO.:
REVISION:
CHECKED BY:
APPROVED BY:
DATE:

DESIGNED BY: F.Toala
CHECKED BY: L.Tyrell
APPROVED BY: F.Aquila / L.Tyrell
ISSUE FOR: Construction

AMERICAN SAMOA POWER AUTHORITY
ENGINEERING SERVICES DIVISION
P.O.BOX PPB, TAFUNA, PAGO PAGO, AS 96799

PROJECT NAME:
PHASE 3
VAITOGI HDPE PIPE REPLACEMENT WATERLINE PROJECT

DRAWING TITLE:
SEGMENT 1
PLAN & PROFILE (STA, 15+00 TO 21+00)

PROJECT LOCATION:
VAITOGI VILLAGE, AMERICAN SAMOA

PROJECT NO: #1658785
SIGNATURE:
DATE:

SCALE: AS SHOWN
DATE: JAN-2024
SHEET NO. C04

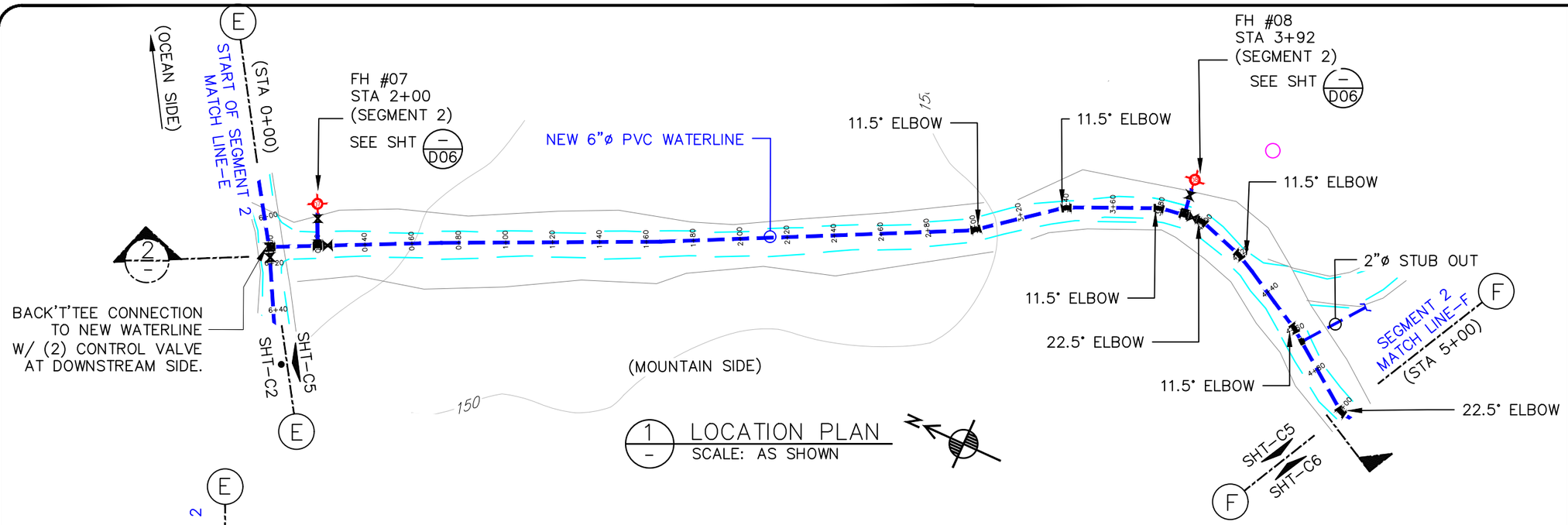

1 LOCATION PLAN
SCALE: AS SHOWN

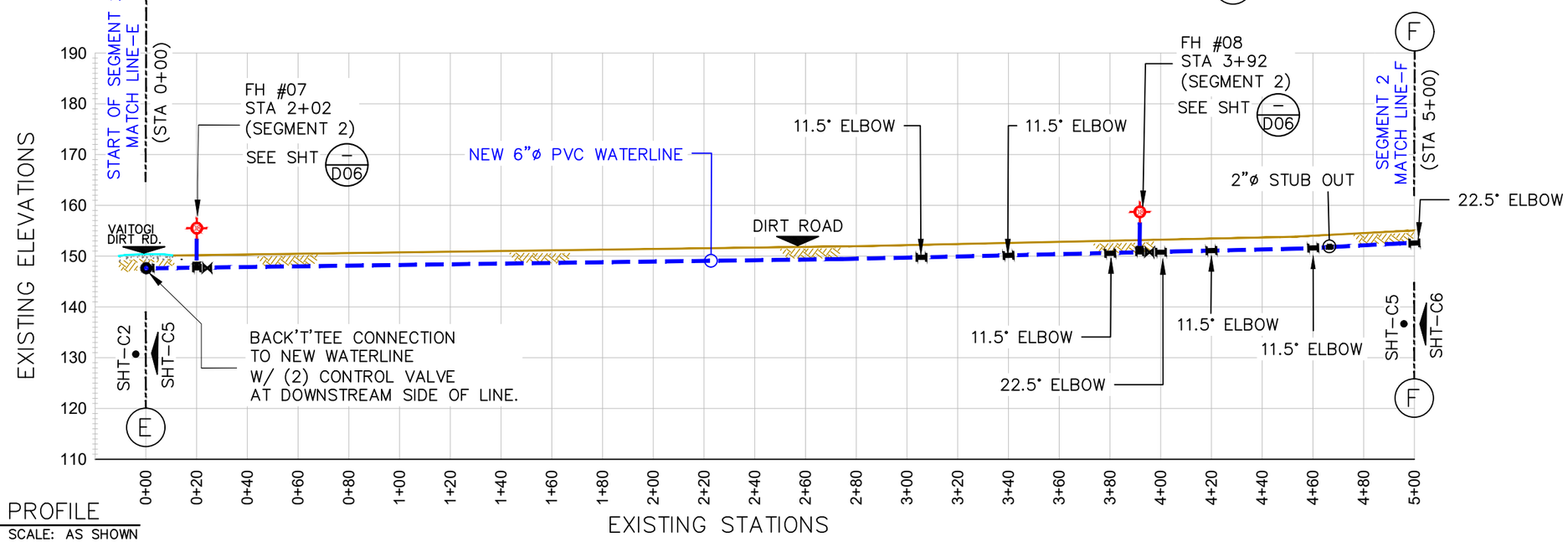

2 PROFILE
SCALE: AS SHOWN

LEGEND:

EXISTING WATER SERVICE:	
EXISTING ACP WATER:	
NEW 6ø" PVC WATER:	
TELEPHONE CONDUIT:	
EXISTING STORM DRAIN:	
EXISTING SEWER MAIN:	
GATE VALVE:	
POWER/TEL POLE:	
AIR RELIEVE VALVE:	
ELBOWS:	11.25° 22.5° 45° 90° BACK TEE
FIRE HYDRANT:	
BAC-T SAMPLING STN:	
SERVICE METER:	
STUB-OUT:	
PRV / PSV :	
EXISTING SERVICE LINE TRANSFERRED TO NEW LINE:	
TREES:	HEDGES:
ROCK WALL:	WIRE FENCE:

NOTES:
CONSTRUCTION CONTRACTOR SHALL FIELD VERIFY ALL EXISTING UNDERGROUND INFRASTRUCTURE TO ENSURE SAFETY OF ITS WORKERS AND AVOID ANY DAMAGES TO EXISTING GOVERNMENT UTILITIES.

ALL EXISTING FIRE HYDRANT TO BE TRANSFERRED TO NEW LINE.
SEE SHT-D06 FOR FIRE HYDRANT CONNECTION DETAILS.

INSTALL 2"ø x 6"ø SADDLE FOR NEW SERVICE CONNECTION @ EVERY 500 FEET

0 50' 100'
SCALE IN FEET
HORIZ. 1": 20'

0 40' 80'
SCALE IN FEET
VERT. 1": 20'

No.	Description	Date

REV. NO.:
REVISION:
CHECKED BY:
APPROVED BY:
DATE:

DESIGNED BY: F.Toala
CHECKED BY: L.Tyrell
APPROVED BY: F.Aquila / L.Tyrell
ISSUE FOR: Construction

ASPA
AMERICAN SAMOA POWER AUTHORITY

AMERICAN SAMOA POWER AUTHORITY
ENGINEERING SERVICES DIVISION
P.O.BOX PPB, TAFUNA, PAGO PAGO, AS 96799

PROJECT NAME:
PHASE 3
VAITOGI HDPE PIPE REPLACEMENT
WATERLINE PROJECT

DRAWING TITLE:
SEGMENT 2
PLAN & PROFILE (STA, 0+00 TO 5+00)

PROJECT LOCATION:
VAITOGI VILLAGE, AMERICAN SAMOA

PROJECT NO: #1658785
SIGNATURE:
DATE:

SCALE: AS SHOWN
DATE: JAN-2024
SHEET NO. C05

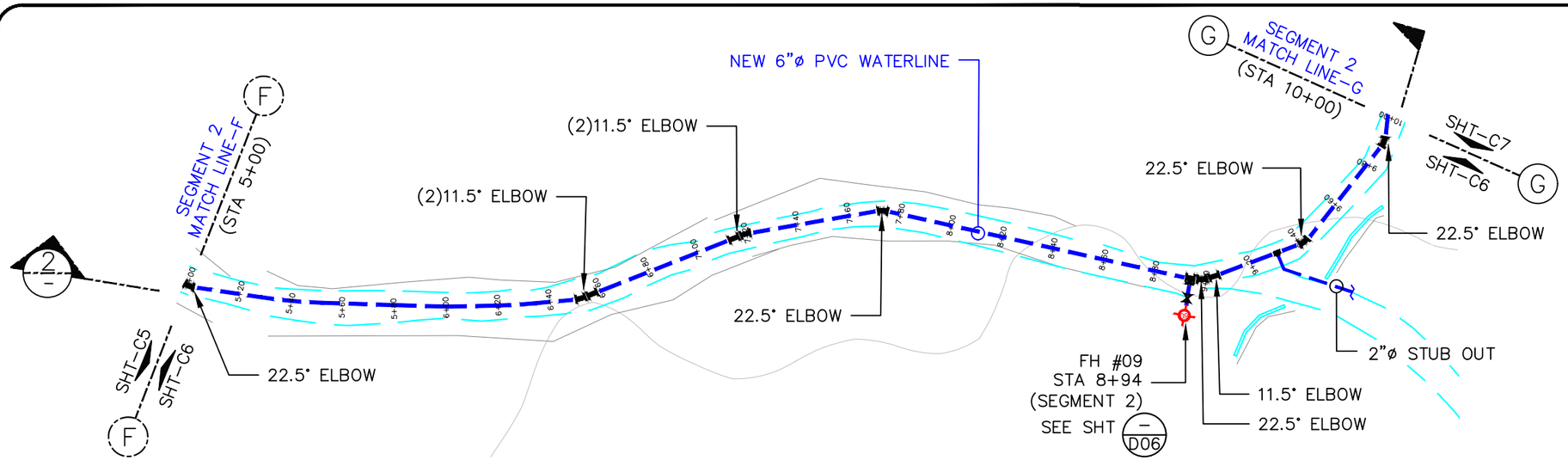

1 LOCATION PLAN
SCALE: AS SHOWN

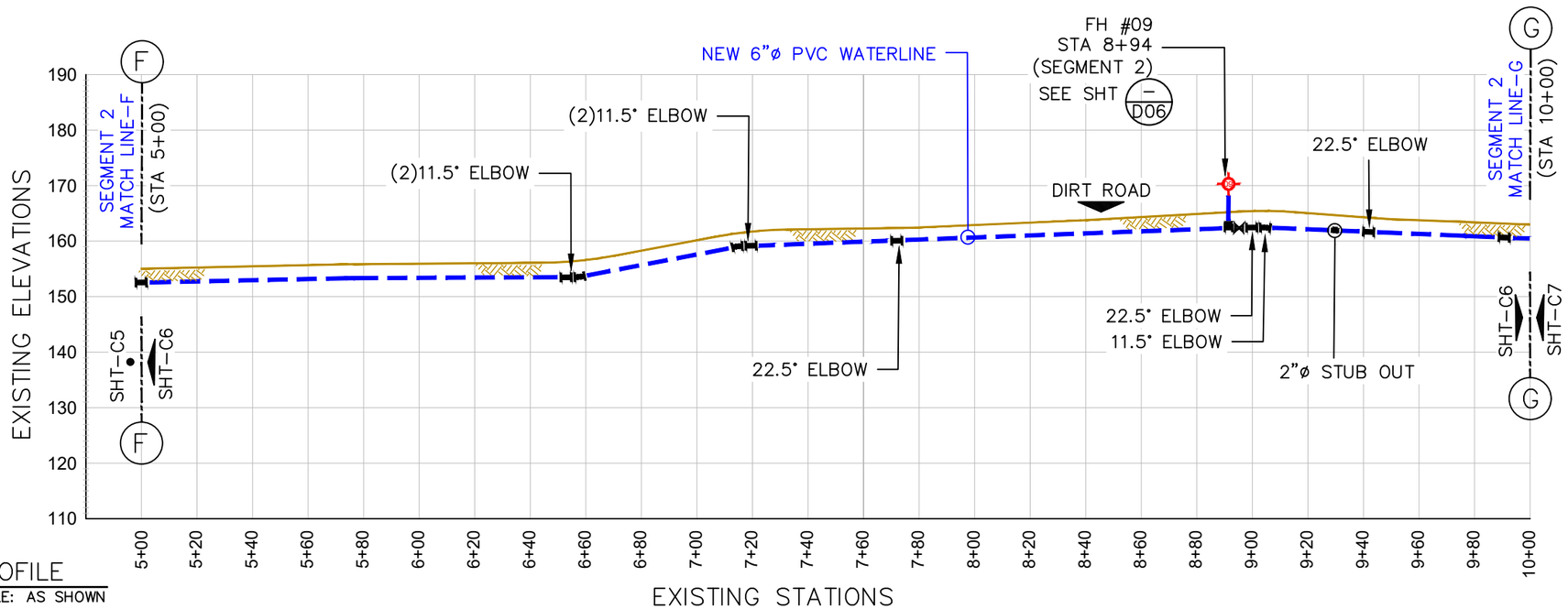

2 PROFILE
SCALE: AS SHOWN

LEGEND:

EXISTING WATER SERVICE:	
EXISTING ACP WATER:	
NEW 6ø" PVC WATER:	
TELEPHONE CONDUIT:	
EXISTING STORM DRAIN:	
EXISTING SEWER MAIN:	
GATE VALVE:	
POWER/TEL POLE:	
AIR RELIEVE VALVE:	
ELBOWS:	11.25° 22.5° 45° 90° BACK TEE
FIRE HYDRANT:	
BAC-T SAMPLING STN:	
SERVICE METER:	
STUB-OUT:	
PRV / PSV :	
EXISTING SERVICE LINE TRANSFERRED TO NEW LINE:	
TREES:	HEDGES:
ROCK WALL:	WIRE FENCE:

NOTES:
CONSTRUCTION CONTRACTOR SHALL FIELD VERIFY ALL EXISTING UNDERGROUND INFRASTRUCTURE TO ENSURE SAFETY OF ITS WORKERS AND AVOID ANY DAMAGES TO EXISTING GOVERNMENT UTILITIES.

ALL EXISTING FIRE HYDRANT TO BE TRANSFERRED TO NEW LINE.
SEE SHT-D06 FOR FIRE HYDRANT CONNECTION DETAILS.

INSTALL 2"ø x 6"ø SADDLE FOR NEW SERVICE CONNECTION @ EVERY 500 FEET

0 50' 100'
SCALE IN FEET
HORIZ. 1": 20'

0 40' 80'
SCALE IN FEET
VERT. 1": 20'

No.	Description	Date

REV. NO.:
REVISION:
CHECKED BY:
APPROVED BY:
DATE:

DESIGNED BY: F.Toala
CHECKED BY: L.Tyrell
APPROVED BY: F.Aquila / L.Tyrell
ISSUE FOR: Construction

ASPA
AMERICAN SAMOA POWER AUTHORITY

AMERICAN SAMOA POWER AUTHORITY
ENGINEERING SERVICES DIVISION
P.O.BOX PPB, TAFUNA, PAGO PAGO, AS 96799

PROJECT NAME:
PHASE 3
VAITOGI HDPE PIPE REPLACEMENT
WATERLINE PROJECT

DRAWING TITLE:
SEGMENT 2
PLAN & PROFILE (STA, 5+00 TO 10+00)

PROJECT LOCATION:
VAITOGI VILLAGE, AMERICAN SAMOA

PROJECT NO: #1658785
SIGNATURE:
DATE:

SCALE: AS SHOWN
DATE: JAN-2024
SHEET NO. C06

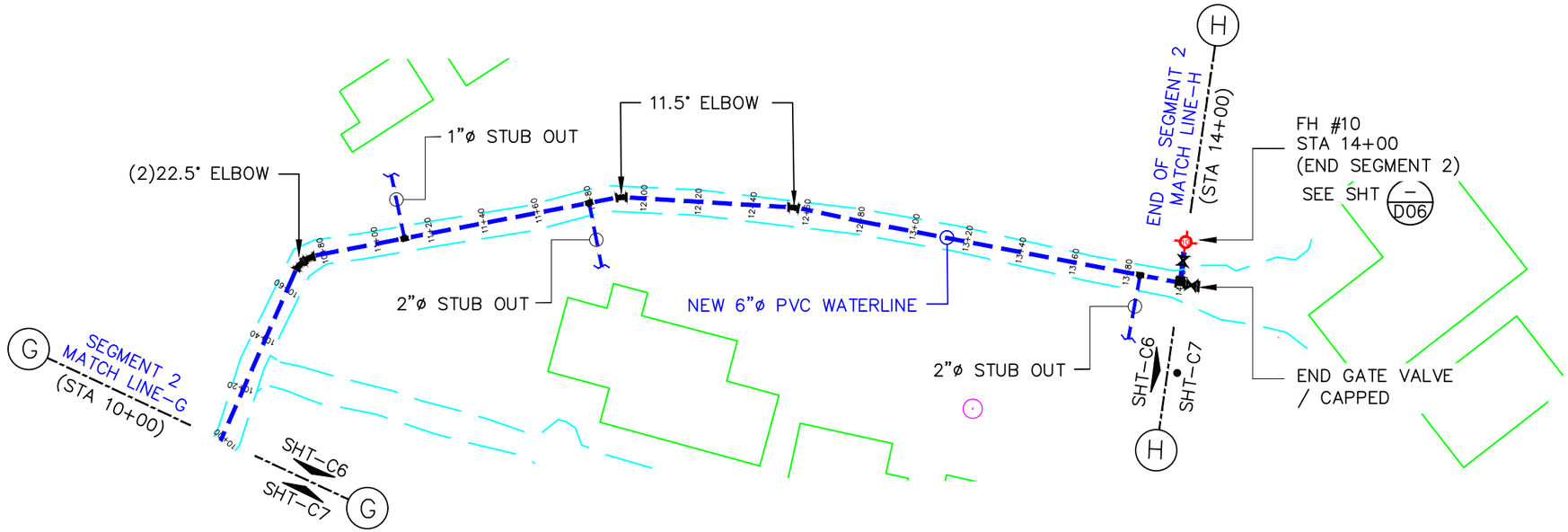

1 LOCATION PLAN
SCALE: AS SHOWN

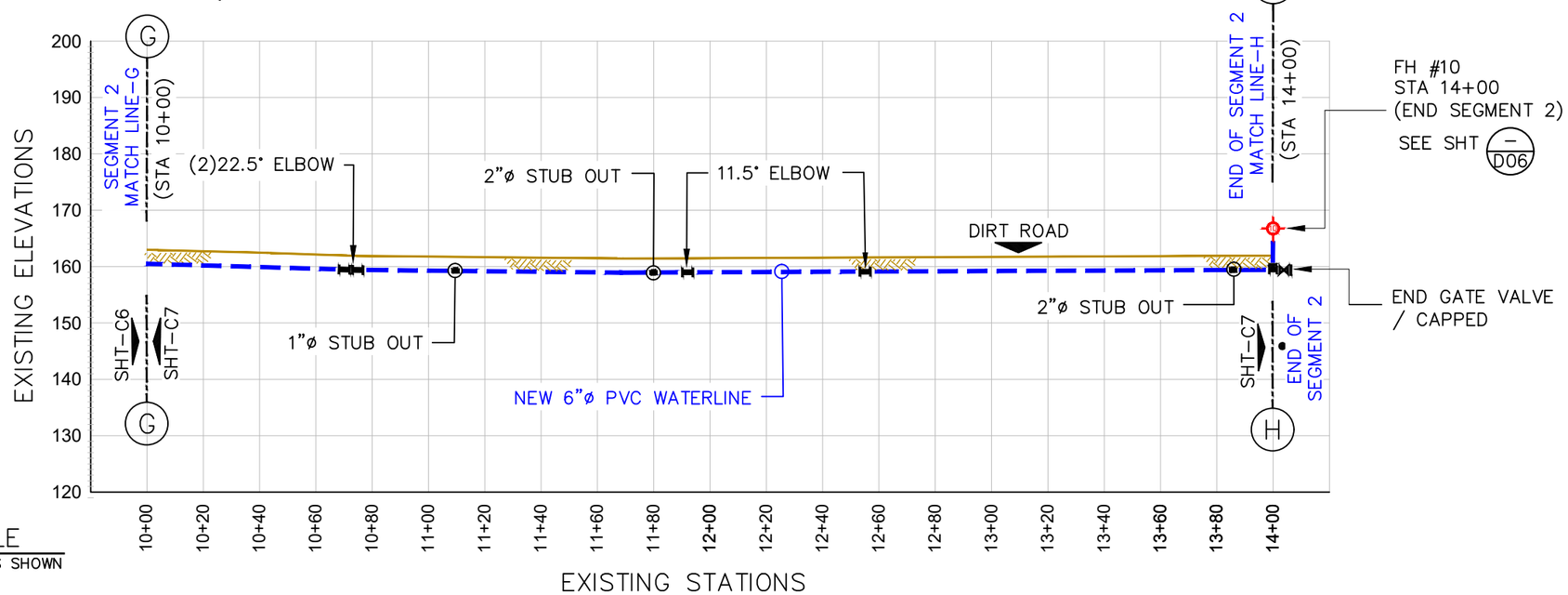

2 PROFILE
SCALE: AS SHOWN

LEGEND:

EXISTING WATER SERVICE:	
EXISTING ACP WATER:	
NEW 6ø" PVC WATER:	
TELEPHONE CONDUIT:	
EXISTING STORM DRAIN:	
EXISTING SEWER MAIN:	
GATE VALVE:	
POWER/TEL POLE:	PP TP
AIR RELIEVE VALVE:	
ELBOWS:	11.25° 22.5° 45° 90° BACK TEE
FIRE HYDRANT:	
BAC-T SAMPLING STN:	
SERVICE METER:	
STUB-OUT:	
PRV / PSV :	
EXISTING SERVICE LINE TRANSFERRED TO NEW LINE:	
TREES:	HEDGES:
ROCK WALL:	WIRE FENCE:

NOTES:
CONSTRUCTION CONTRACTOR SHALL FIELD VERIFY ALL EXISTING UNDERGROUND INFRASTRUCTURE TO ENSURE SAFETY OF ITS WORKERS AND AVOID ANY DAMAGES TO EXISTING GOVERNMENT UTILITIES.

ALL EXISTING FIRE HYDRANT TO BE TRANSFERRED TO NEW LINE.
SEE SHT-D06 FOR FIRE HYDRANT CONNECTION DETAILS.

INSTALL 2"ø x 6"ø SADDLE FOR NEW SERVICE CONNECTION @ EVERY 500 FEET

0 50' 100'
SCALE IN FEET
HORIZ. 1": 20'

0 40' 80'
SCALE IN FEET
VERT. 1": 20'

No.	Description	Date

REV. NO.:
REVISION:
CHECKED BY:
APPROVED BY:
DATE:

DESIGNED BY: F.Toala
CHECKED BY: L.Tyrell
APPROVED BY: F.Aquila / L.Tyrell
ISSUE FOR: Construction

ASPA
AMERICAN SAMOA POWER AUTHORITY

AMERICAN SAMOA POWER AUTHORITY
ENGINEERING SERVICES DIVISION
P.O.BOX PPB, TAFUNA, PAGO PAGO, AS 96799

PROJECT NAME:
PHASE 3
VAITOGI HDPE PIPE REPLACEMENT
WATERLINE PROJECT

DRAWING TITLE:
SEGMENT 2 ENDS
PLAN & PROFILE (STA, 10+00 TO 14+00)

PROJECT LOCATION:
VAITOGI VILLAGE, AMERICAN SAMOA

PROJECT NO: #1658785
SIGNATURE:
DATE:

SCALE: AS SHOWN
DATE: JAN-2024
SHEET NO. C07

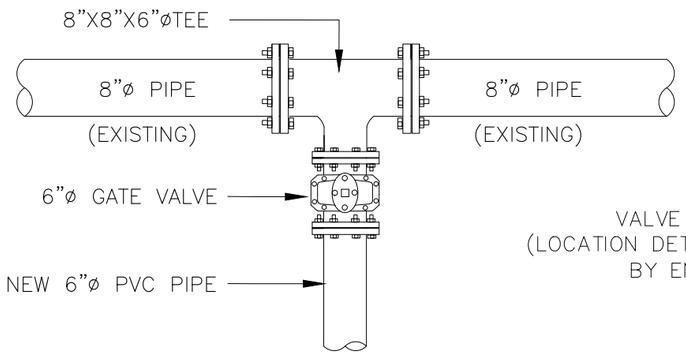

TIE IN #1 PLAN (SEGMENT 1 START)
C01

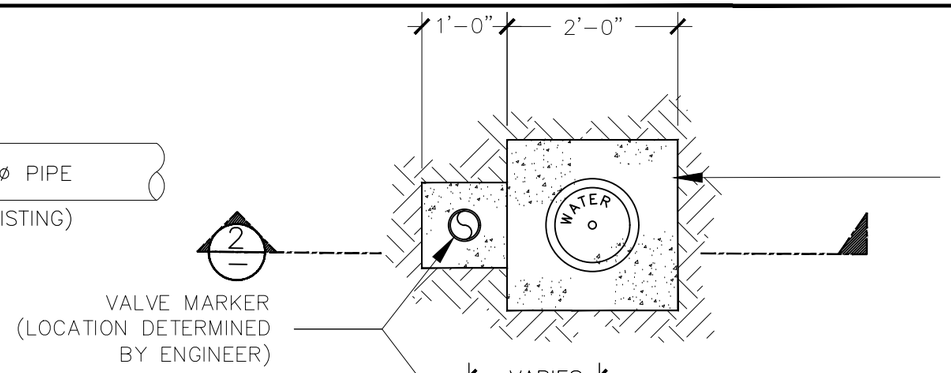

PLAN
SCALE: 1/2" : 1'-0"

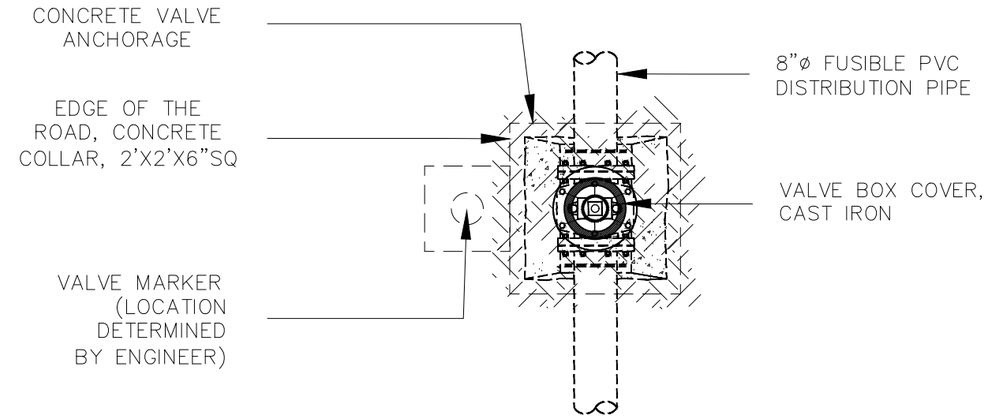

SECTION ON TOP OF VALVE
SCALE: 1/2" : 1'-0"

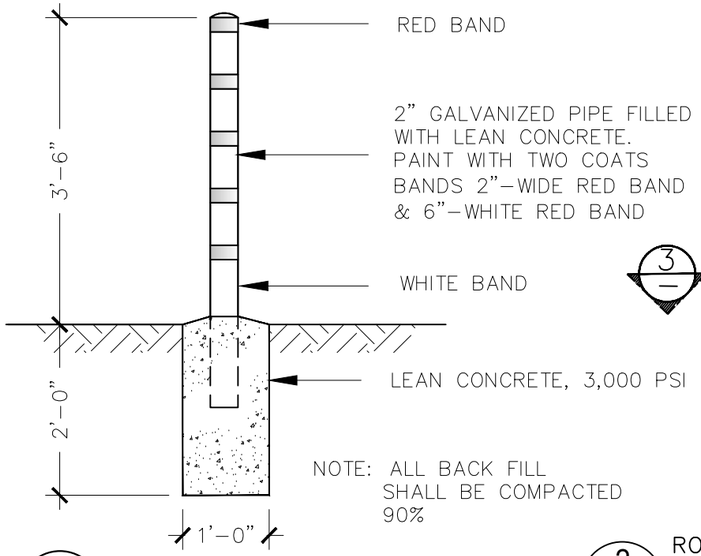

VALVE MARKER DETAIL
SCALE: 1/2" = 1'

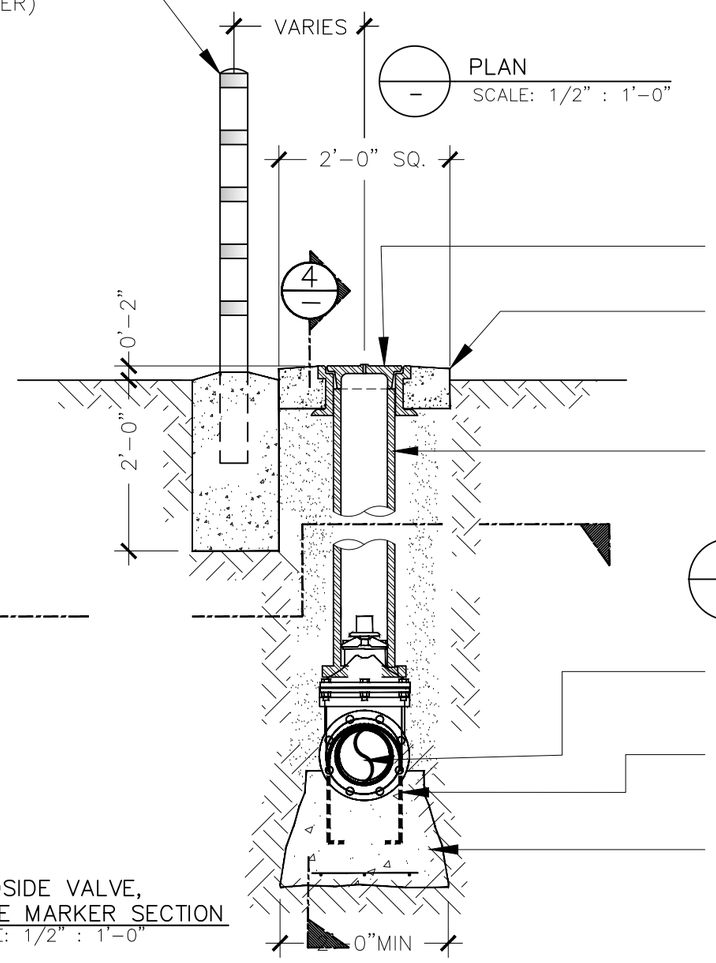

ROADSIDE VALVE,
VALVE MARKER SECTION
SCALE: 1/2" : 1'-0"

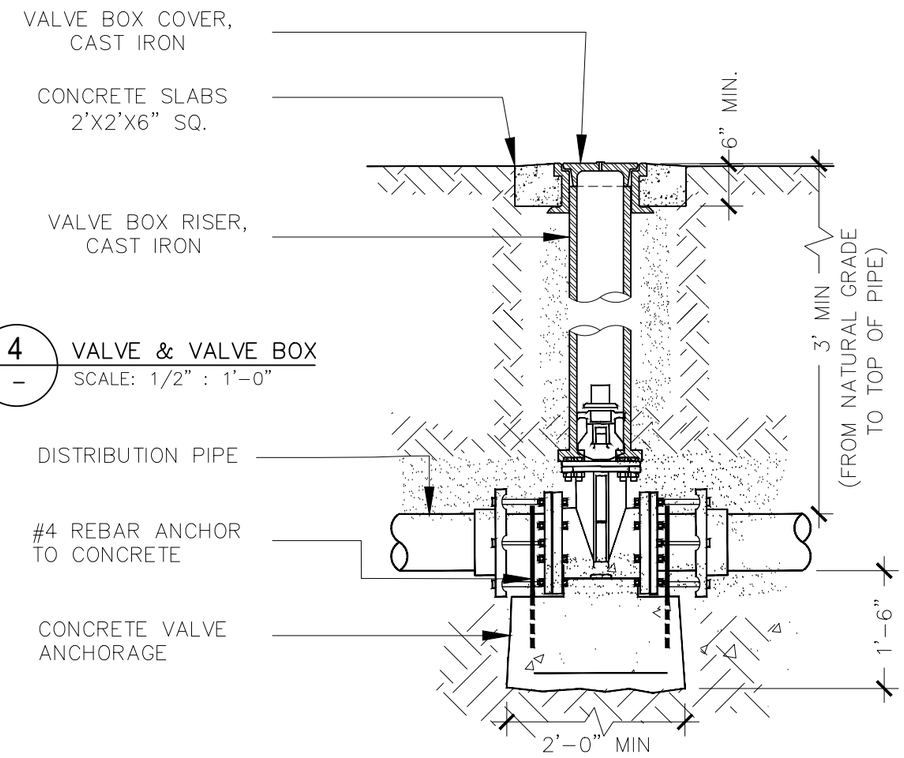

VALVE & VALVE BOX
SCALE: 1/2" : 1'-0"

No.	Description	Date

REV. NO.:
REVISION:
CHECKED BY:
APPROVED BY:
DATE:

DESIGNED BY: F.Toala
CHECKED BY: L.Tyrell
APPROVED BY: F.Aquila / L.Tyrell
ISSUE FOR: Construction

AMERICAN SAMOA POWER AUTHORITY
ENGINEERING SERVICES DIVISION
P.O.BOX PPB, TAFUNA, PAGO PAGO, AS 96799

PROJECT NAME: PHASE 3 VAITOGI HDPE PIPE REPLACEMENT WATERLINE PROJECT
DRAWING TITLE: GATE VALVE CONNECTION AND BOX DETAILS
PROJECT LOCATION: VAITOGI VILLAGE, AMERICAN SAMOA

PROJECT NO: #1658785
SIGNATURE:
DATE:

SCALE: AS SHOWN
DATE: JAN-2024
SHEET NO. D01

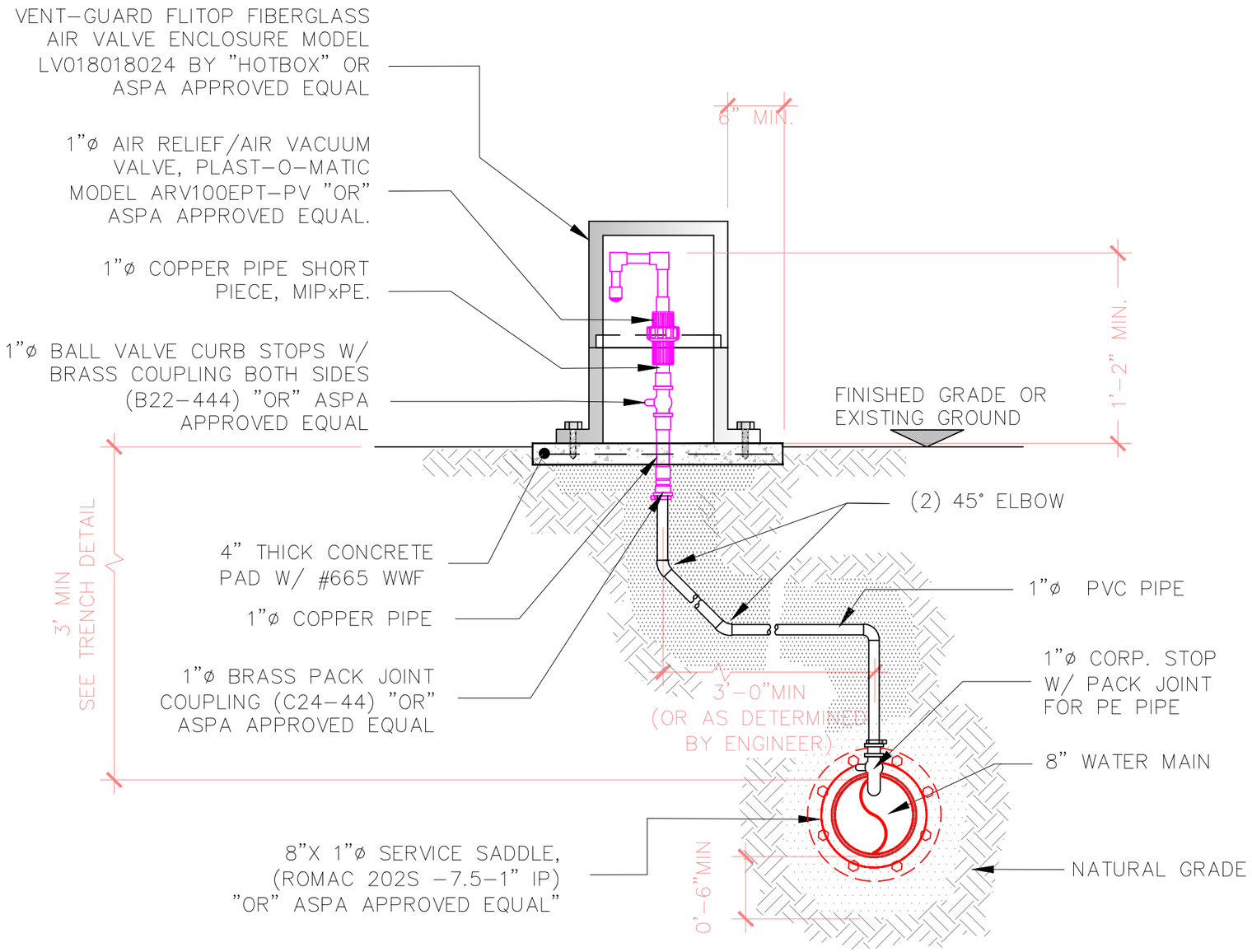

- / - ARV VALVE SECTION DETAILS
SCALE: 3/4" = 1'

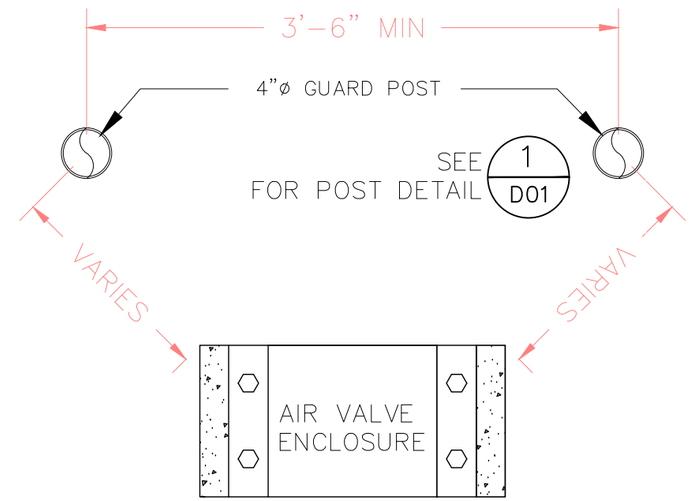

2 / - PLAN VIEW SHOWING ARV GUARD POST LOCATION
NOT TO SCALE

No.	Description	Date

REV. NO.:
REVISION:
CHECKED BY:
APPROVED BY:
DATE:

DESIGNED BY: F.Toala
CHECKED BY: L.Tyrell
APPROVED BY: F.Aquila / L.Tyrell
ISSUE FOR: Construction

ASPA
AMERICAN SAMOA POWER AUTHORITY

AMERICAN SAMOA POWER AUTHORITY
ENGINEERING SERVICES DIVISION
P.O.BOX PPB, TAFUNA, PAGO PAGO, AS 96799

PROJECT NAME: PHASE 3 VAITOGI HDPE PIPE REPLACEMENT WATERLINE PROJECT
DRAWING TITLE: AIR RELIEF VALVE & DETAILS
PROJECT LOCATION: VAITOGI VILLAGE, AMERICAN SAMOA

PROJECT NO: #1658785
SIGNATURE:
DATE:

SCALE: AS SHOWN
DATE: JAN-2024
SHEET NO. D02

GENERAL NOTES:

1. TABLE IS BASED ON 2000#/SQ. FT. SOIL. IF CONDITIONS ARE FOUND TO INDICATE SOIL BEARING IS LESS, THE AREAS SHALL BE INCREASED ACCORDINGLY.
2. AREAS FOR PIPE LARGER THAN 18" SHALL BE CALCULATED.
3. CONCRETE SHALL HAVE A MINIMUM COMPRESSION STRENGTH OF 2500 PSI.
4. THRUST BLOCK IS TO EXTEND TO UNDISTURBED SOIL.
5. SIZE MAY BE DECREASED FOR LESSER DEGREE BENDS AS DETERMINED BY ENGINEER.
6. KEEP CONCRETE CLEAR OF M.J. OR BELL AND SPIGOT JOINTS.
7. BLOCK IN A SIMILAR MANNER AT TEES, HYDRANTS, PLUG OR OTHER LOCATIONS AS REQUIRED.
8. WHEN NECESSARY ADDITIONAL THRUST RESTRAINT METHODS MAY BE USED, SUCH AS MECHANICAL JOINT RESTRAINTS, TIE-RODS (INSTALLED PER MANUFACTURERS' RECOMMENDATIONS) OR OTHER APPROVED METHODS.

CONSTRUCTION KEY NOTES:

A. LENGTH "Y & W" AS REQUIRED TO OBTAIN BEARING AREA AGAINST UNDISTURBED SOIL.

B. ADDITIONAL EXCAVATION IF NECESSARY TO OBTAIN REQUIRED BEARING AREA.

C. MINIMUM THRUST BLOCK AREA REQUIREMENTS FOR (Y & W) AS FOLLOWS:

PIPE SIZE	WATER PIPE	
	TEE, DEAD END 90° BEND	45° AND 22 1/2° BENDS
4" & LESS	3 SQ. FEET	3 SQ. FEET
6"	4 SQ. FEET	3 SQ. FEET
8"	6 SQ. FEET	3 SQ. FEET
10"	9 SQ. FEET	5 SQ. FEET
12"	13 SQ. FEET	7 SQ. FEET
16"	23 SQ. FEET	12 SQ. FEET
18"	29 SQ. FEET	15 SQ. FEET

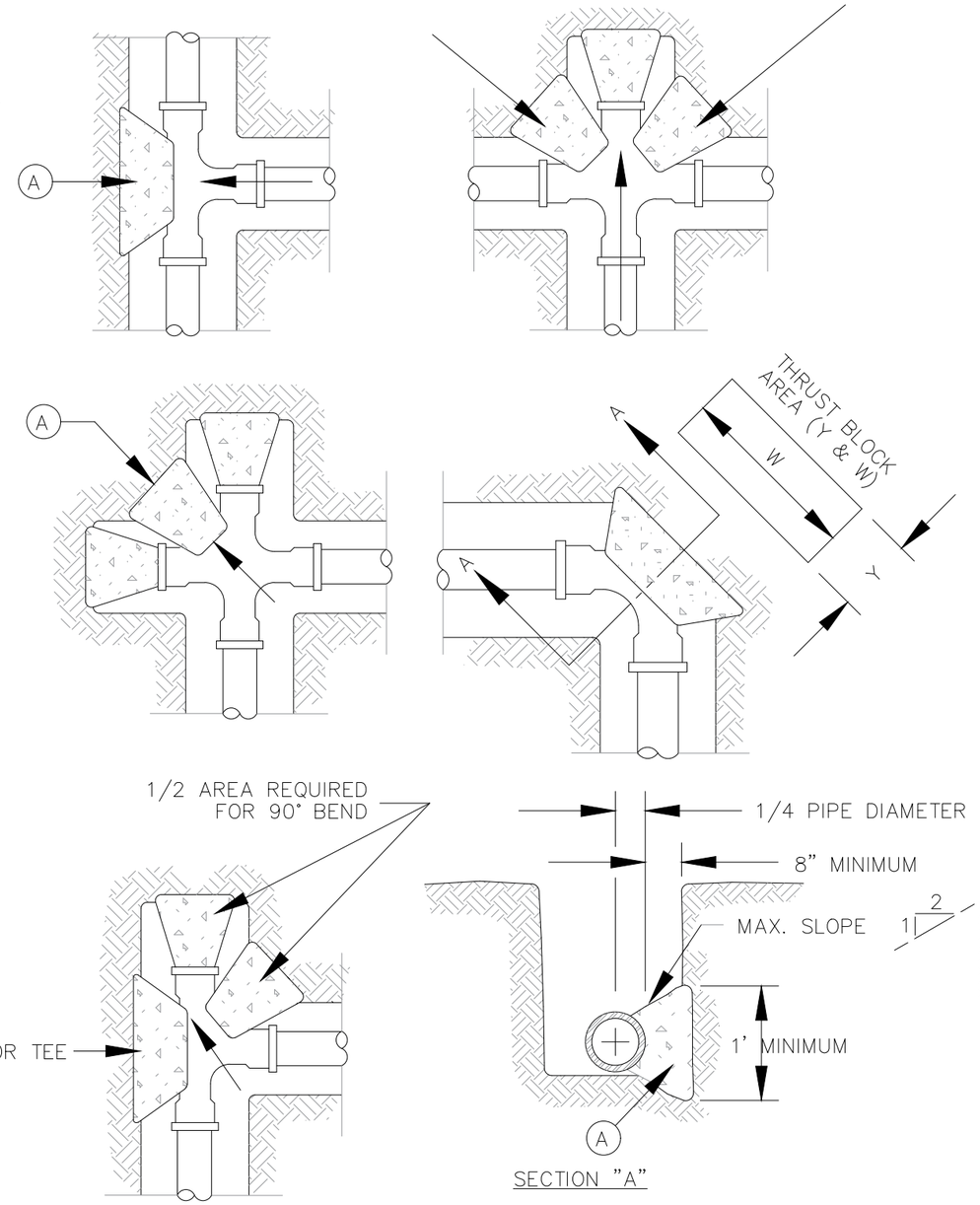

NOTES:

1. ALL ANCHOR RODS ARE TO BE COVERED WITH 80MILS OF BITUMASTIC COMPOUND.
2. WRAP EXTERIOR OF VALVE, ACTUATOR AND REBAR WITH 8 MIL POLYETHYLENE SHEETING AND TAPE.

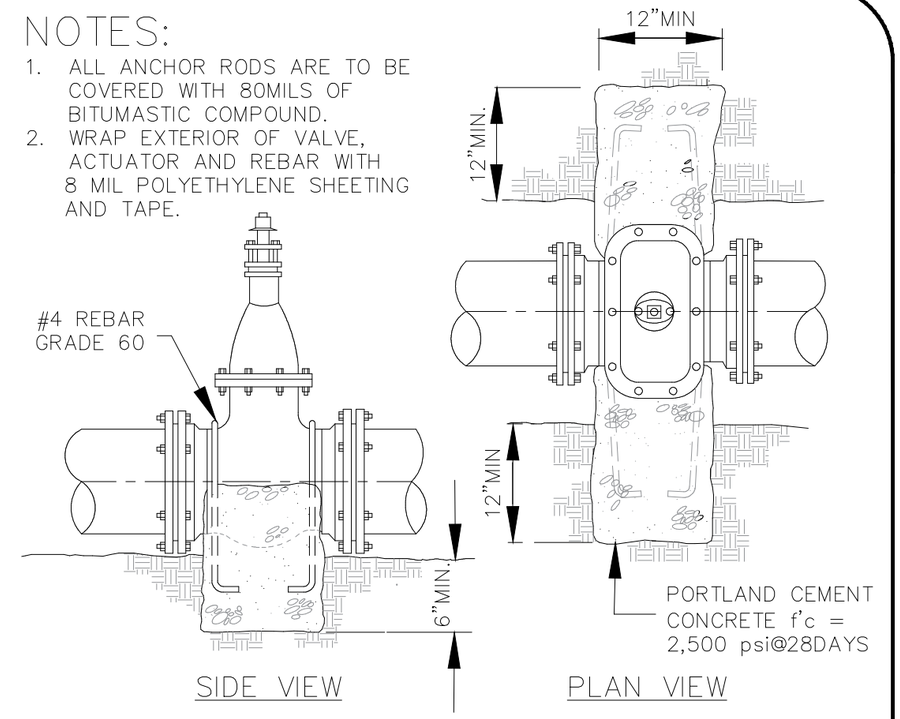

1 TYP. ANCHORING DETAILS

Scale: NTS

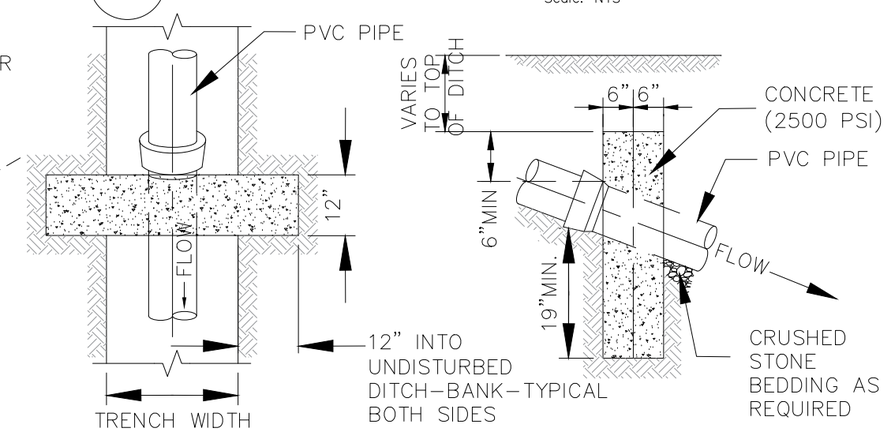

2 ANCHOR ON STEEP SLOPES

Scale: NTS

No.	Description	Date

REV. NO.:

REVISION:

CHECKED BY:

APPROVED BY:

DATE:

DESIGNED BY: F.Toala

CHECKED BY: L.Tyrell

APPROVED BY: F.Aquila / L.Tyrell

ISSUE FOR: Construction

ASPA

AMERICAN SAMOA POWER AUTHORITY

AMERICAN SAMOA POWER AUTHORITY

ENGINEERING SERVICES DIVISION

P.O.BOX PPB, TAFUNA, PAGO PAGO, AS 96799

PROJECT NAME: PHASE 3 VAITOGI HDPE PIPE REPLACEMENT WATERLINE PROJECT

DRAWING TITLE: CONCRETE THRUST BLOCKING DETAILS

PROJECT LOCATION: VAITOGI VILLAGE, AMERICAN SAMOA

PROJECT NO: #1658785

SIGNATURE:

DATE:

SCALE: AS SHOWN

DATE: JAN-2024

SHEET NO. D03

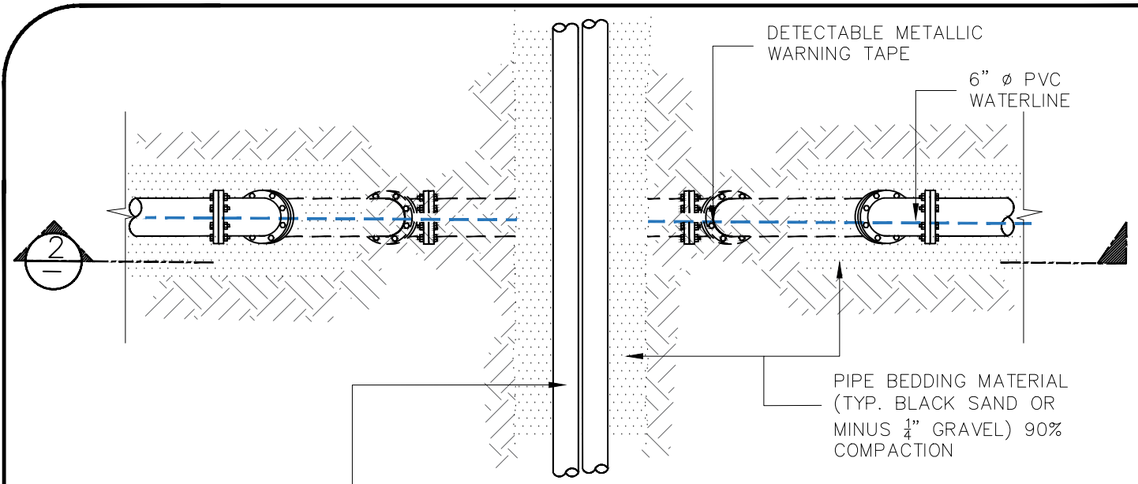

1 PIPE TRENCH PLAN (SECTION ELEVATION)
SCALE: 1/2" = 1'

TRENCH TABLE	
PIPE SIZE	PAYMENT TRENCH
1"	16"
4", 6", 8" OR 10"	24"
12"	30"
16"	34"
20"	38"
24"	42"

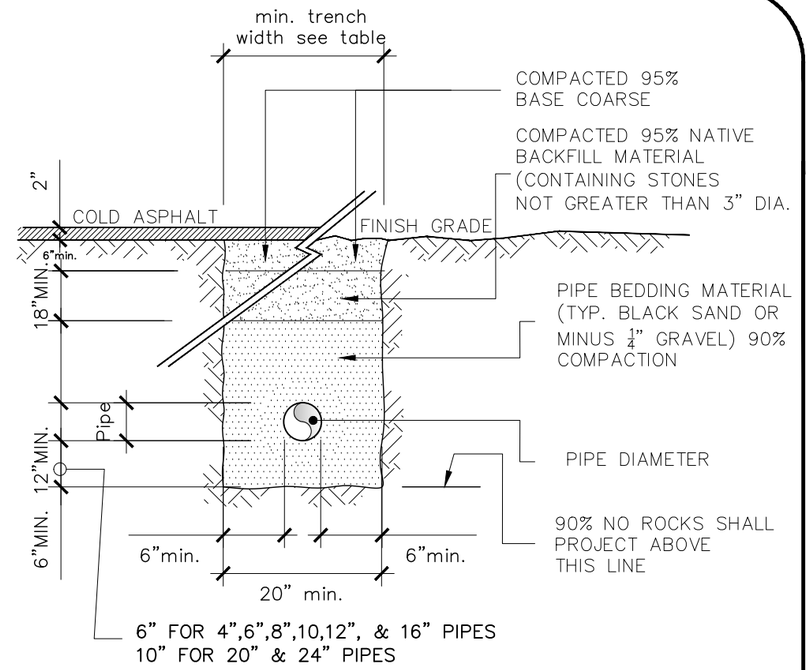

4 TYPICAL TRENCH SECTION
SCALE: 1/2" = 1'

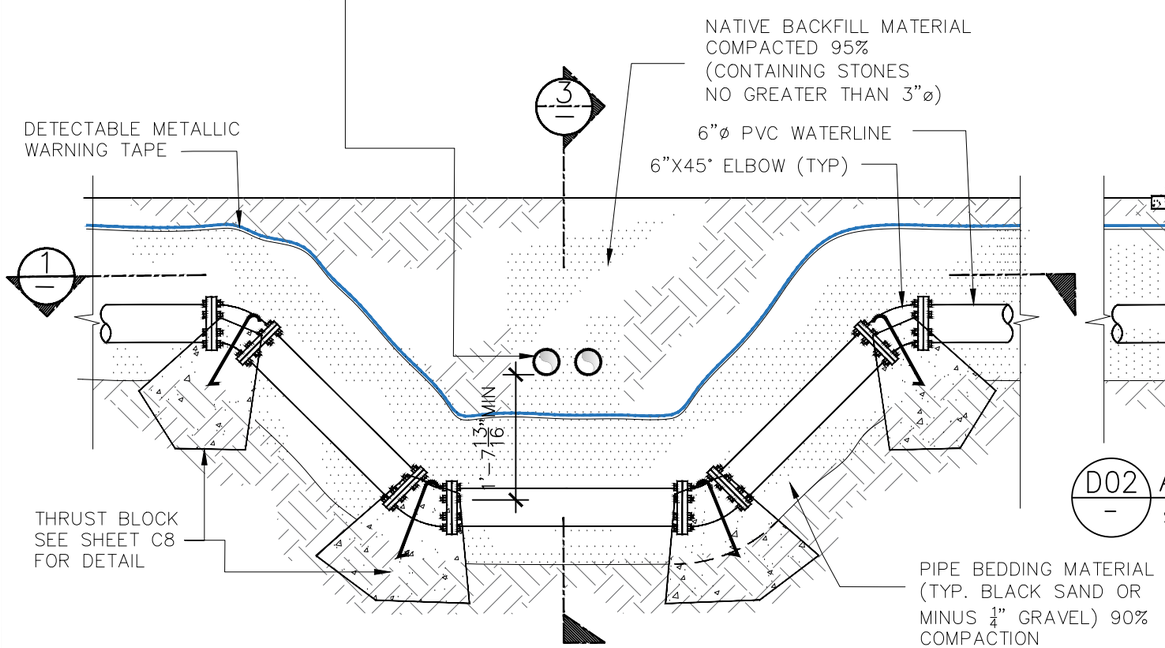

2 TYPICAL UTILITY CROSSING SECTION ELEVATION
SCALE: 1/2" = 1'

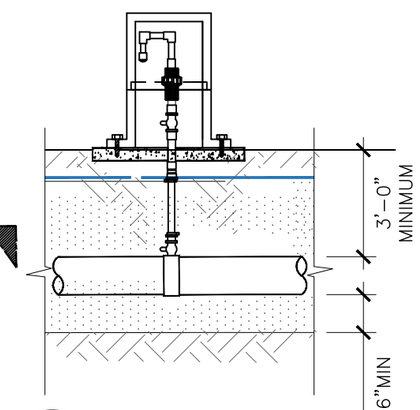

D02 AIR RELIEF VALVE
SCALE: 1/2" = 1'

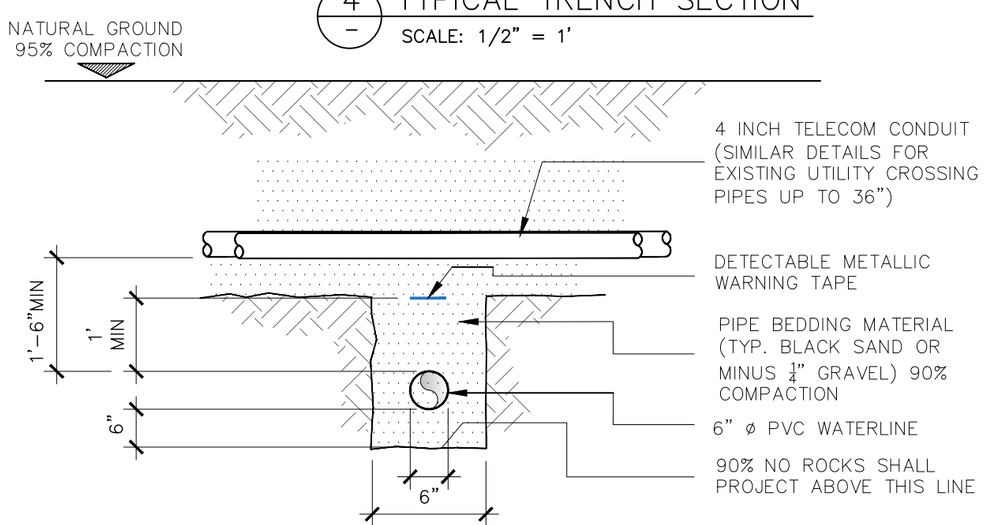

3 TYPICAL UTILITY CROSSING SECTION ELEVATION
SCALE: 1/2" = 1'

No.	Description	Date

REV. NO.:
REVISION:
CHECKED BY:
APPROVED BY:
DATE:

DESIGNED BY: F.Toala
CHECKED BY: L.Tyrell
APPROVED BY: F.Aquila / L.Tyrell
ISSUE FOR: Construction

ASPA
AMERICAN SAMOA POWER AUTHORITY

AMERICAN SAMOA POWER AUTHORITY
ENGINEERING SERVICES DIVISION
P.O.BOX PPB, TAFUNA, PAGO PAGO, AS 96799

PROJECT NAME: PHASE 3 VAITOGI HDPE PIPE REPLACEMENT WATERLINE PROJECT
DRAWING TITLE: UTILITY CROSSING & TRENCH DETAILS
PROJECT LOCATION: VAITOGI VILLAGE, AMERICAN SAMOA

PROJECT NO: #1658785
SIGNATURE:
DATE:

SCALE: AS SHOWN
DATE: JAN-2024
SHEET NO. D04

1 - PLAN
NOT TO SCALE

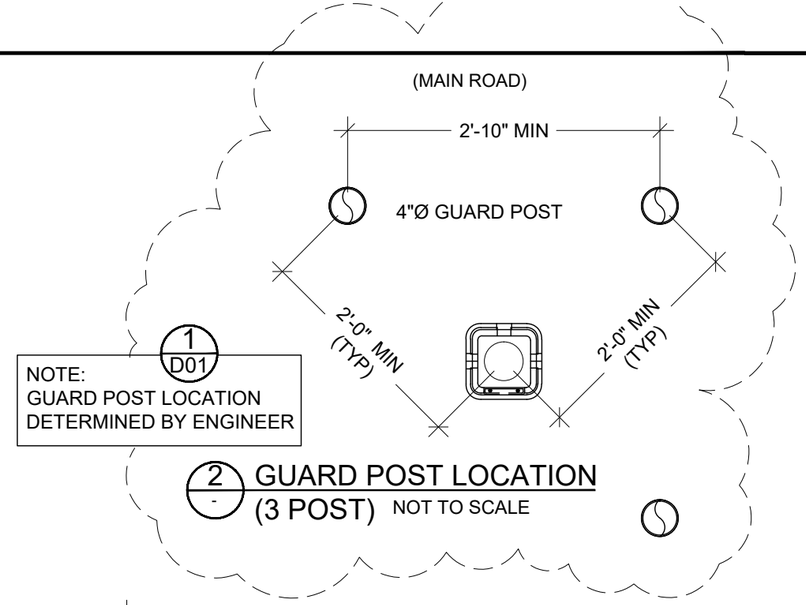

NOTE:
GUARD POST LOCATION
DETERMINED BY ENGINEER

1 - D01

2 - GUARD POST LOCATION (3 POST)
NOT TO SCALE

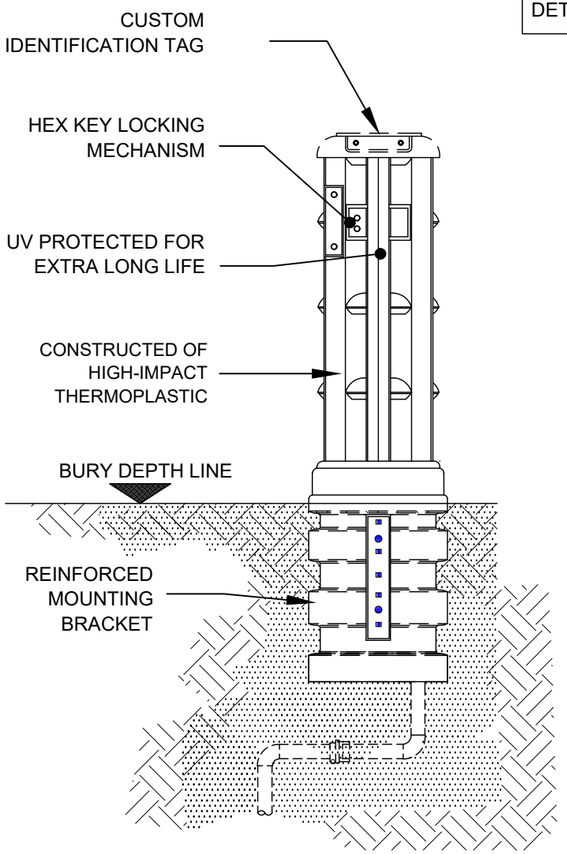

1a - SAFETY GUARD BACTERIOLOGICAL SAMPLING STATION ELEVATION
NOT TO SCALE (SEE SUPPLEMENTAL SPECIFICATION)

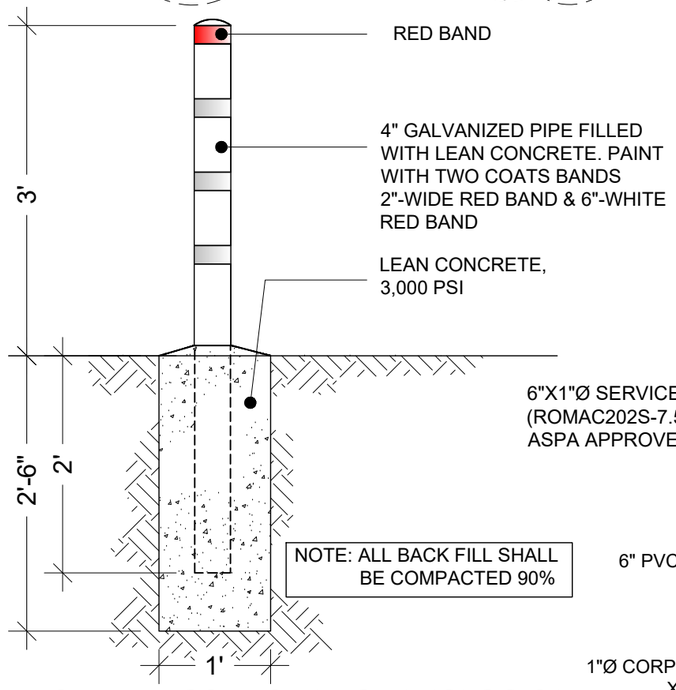

NOTE: ALL BACK FILL SHALL BE COMPACTED 90%

2a - GUARD POST FOR BACTERIOLOGICAL SAMPLING STATION, (2 FEET IN FRONT)
NOT TO SCALE (SEE GUARD POST LOCATION ON MAP ABOVE)

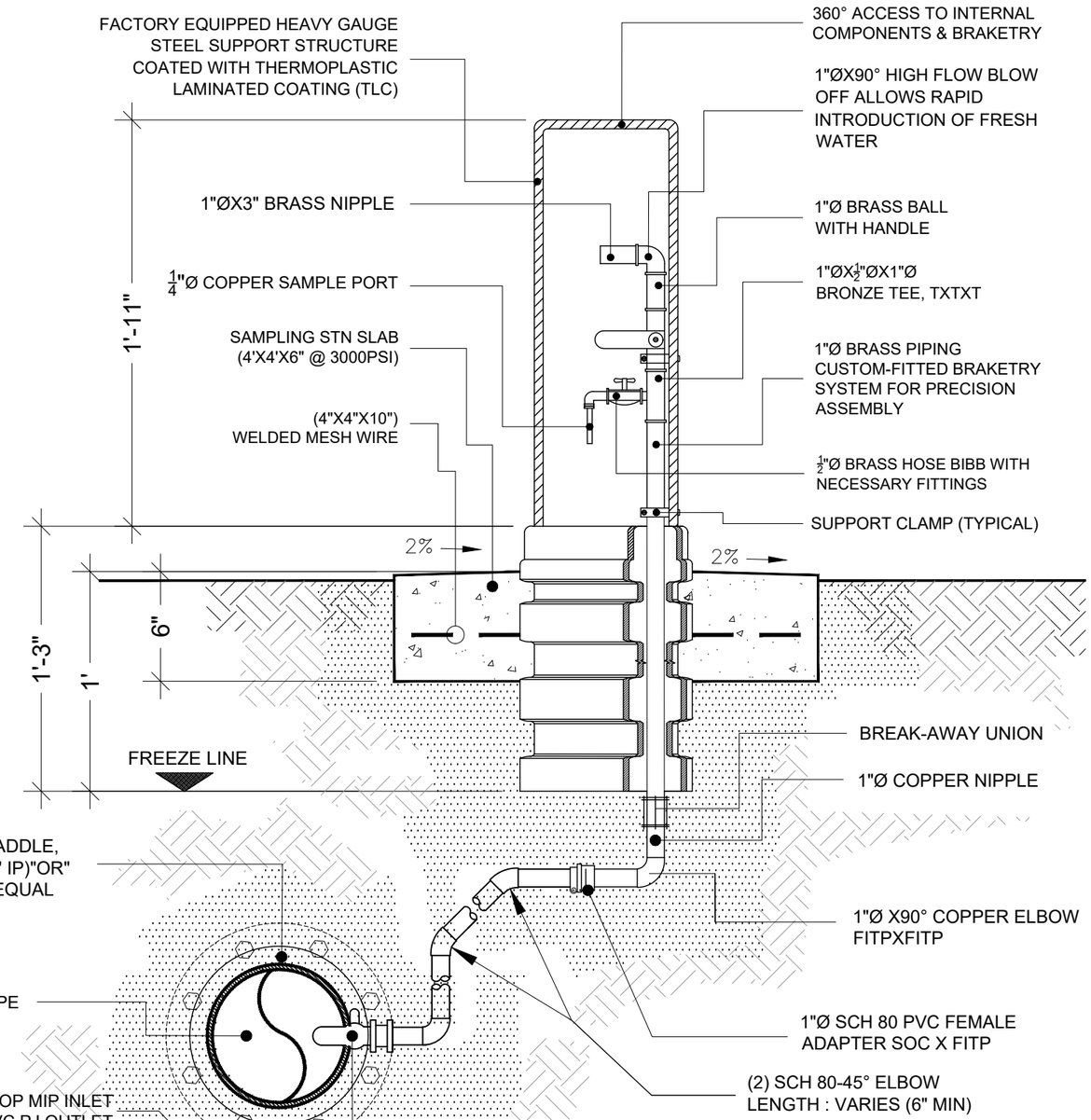

3 - BACTERIOLOGICAL SAMPLING STATION, PIPING, SECTION & DETAILS
NOT TO SCALE (SEE SUPPLEMENTAL SPECIFICATION)

No.	Description	Date

REV. NO.:
REVISION:
CHECKED BY:
APPROVED BY:
DATE:

DESIGNED BY: F.Toala
CHECKED BY: L.Tyrell
APPROVED BY: F.Aquila / L.Tyrell
ISSUE FOR: Construction

ASPA
AMERICAN SAMOA POWER AUTHORITY

AMERICAN SAMOA POWER AUTHORITY
ENGINEERING SERVICES DIVISION
P.O.BOX PPB, TAFUNA, PAGO PAGO, AS 96799

PROJECT NAME: PHASE 3 VAITOGI HDPE PIPE REPLACEMENT WATERLINE PROJECT
DRAWING TITLE: BACTERIOLOGICAL SAMPLING STATION & DETAILS
PROJECT LOCATION: VAITOGI VILLAGE, AMERICAN SAMOA

PROJECT NO: #1658785
SIGNATURE:
DATE:

SCALE: AS SHOWN
DATE: JAN-2024
SHEET NO. D05

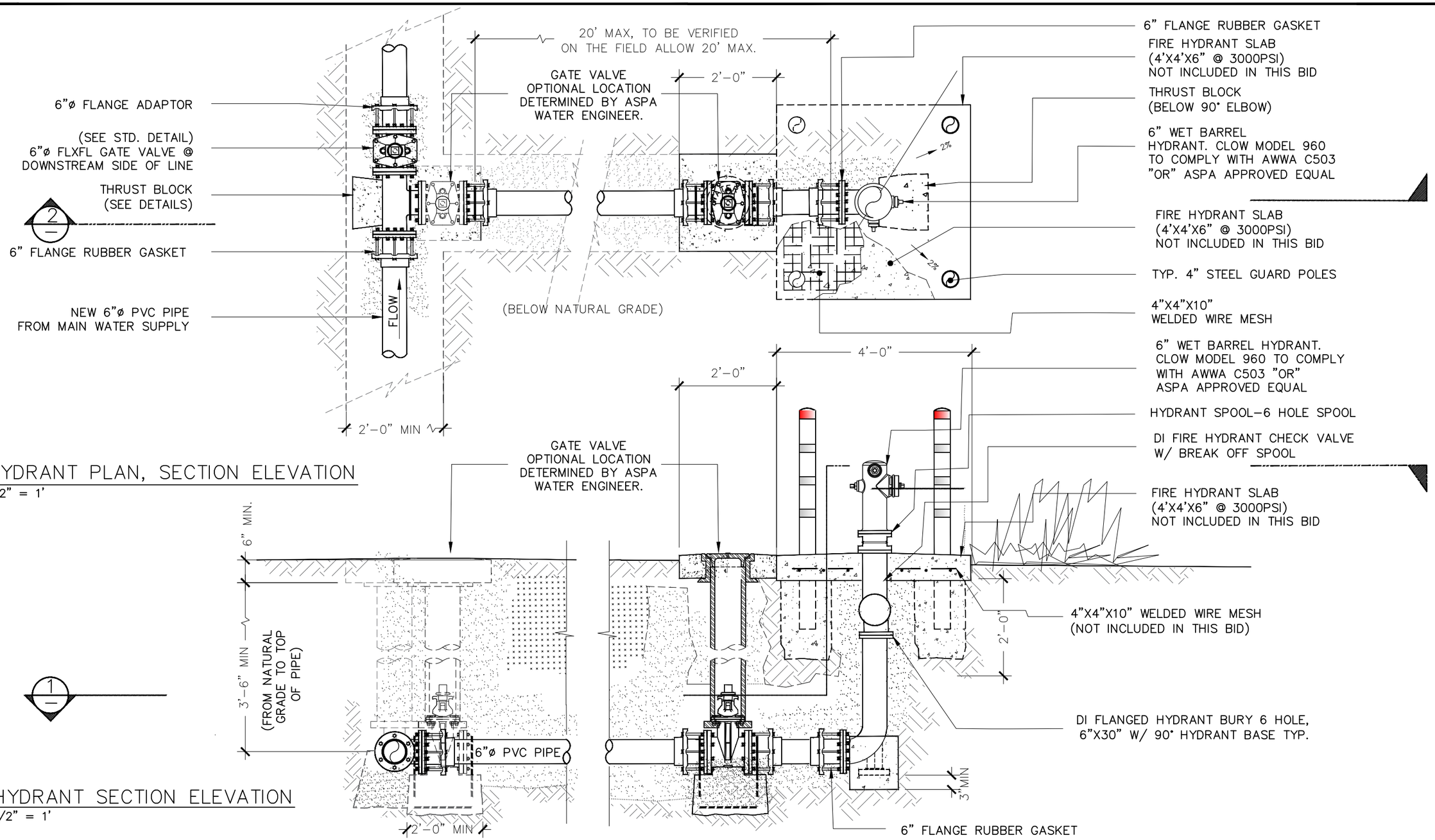

1 FIRE HYDRANT PLAN, SECTION ELEVATION
SCALE: 1/2" = 1'

2 FIRE HYDRANT SECTION ELEVATION
SCALE: 1/2" = 1'

No.	Description	Date

REV. NO.:
REVISION:
CHECKED BY:
APPROVED BY:
DATE:

DESIGNED BY: F.Toala
CHECKED BY: L.Tyrell
APPROVED BY: F.Aquila / L.Tyrell
ISSUE FOR: Construction

AMERICAN SAMOA POWER AUTHORITY
ENGINEERING SERVICES DIVISION
P.O.BOX PPB, TAFUNA, PAGO PAGO, AS 96799

PROJECT NAME: PHASE 3 VAITOGI HDPE PIPE REPLACEMENT WATERLINE PROJECT
DRAWING TITLE: FIRE HYDRANT PIPING & DETAILS
PROJECT LOCATION: VAITOGI VILLAGE, AMERICAN SAMOA

PROJECT NO: #1658785
SIGNATURE:
DATE:
SCALE: AS SHOWN
DATE: JAN-2024
SHEET NO. D06

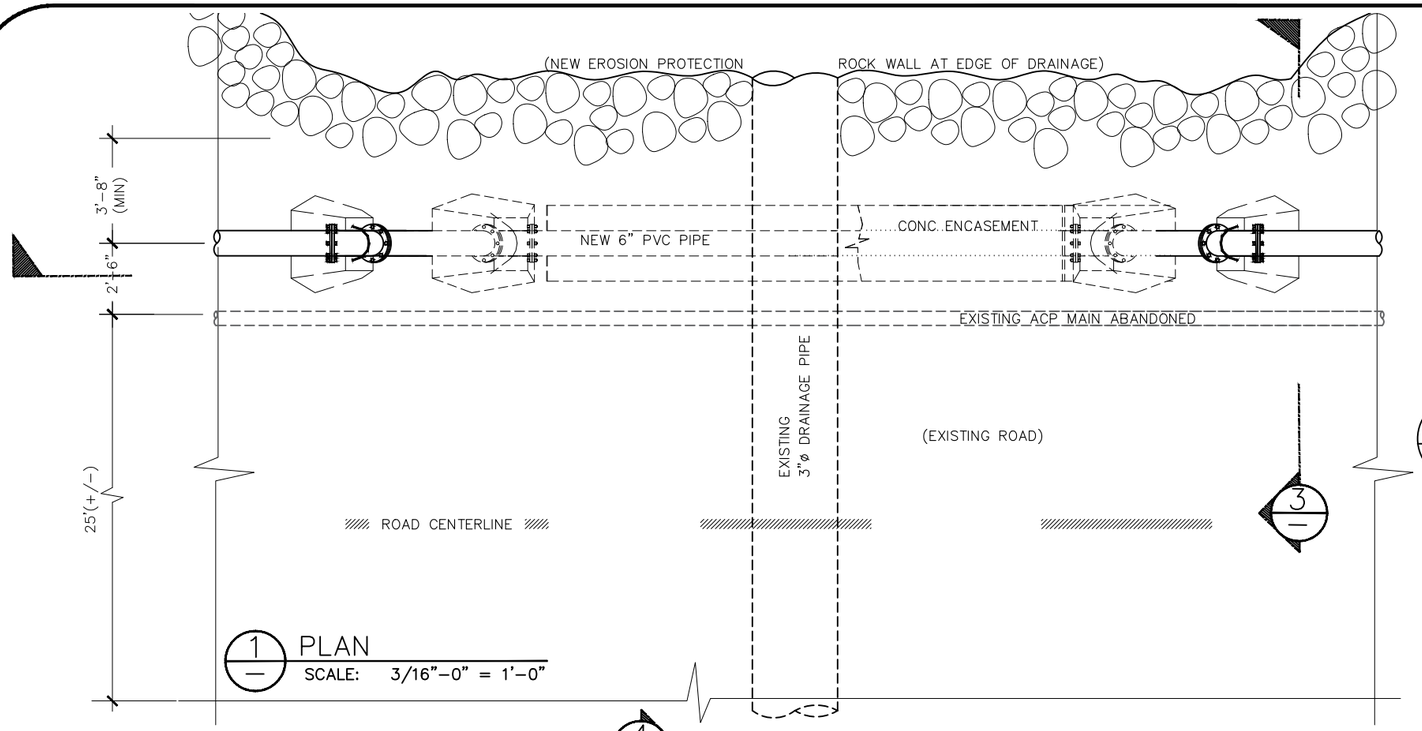

1 PLAN
SCALE: 3/16"-0" = 1'-0"

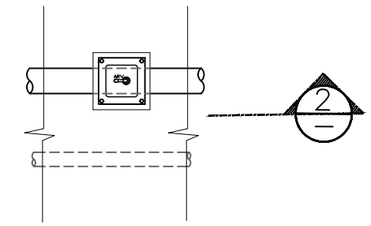

ARV VALVE
SCALE: 3/16"=1'-0"

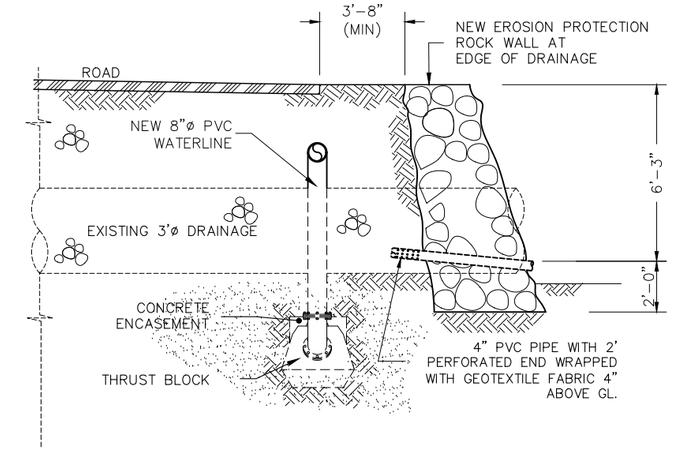

3 ROAD CROSSING (TYPICAL)
SCALE: 3/8"-0" = 1'-0"

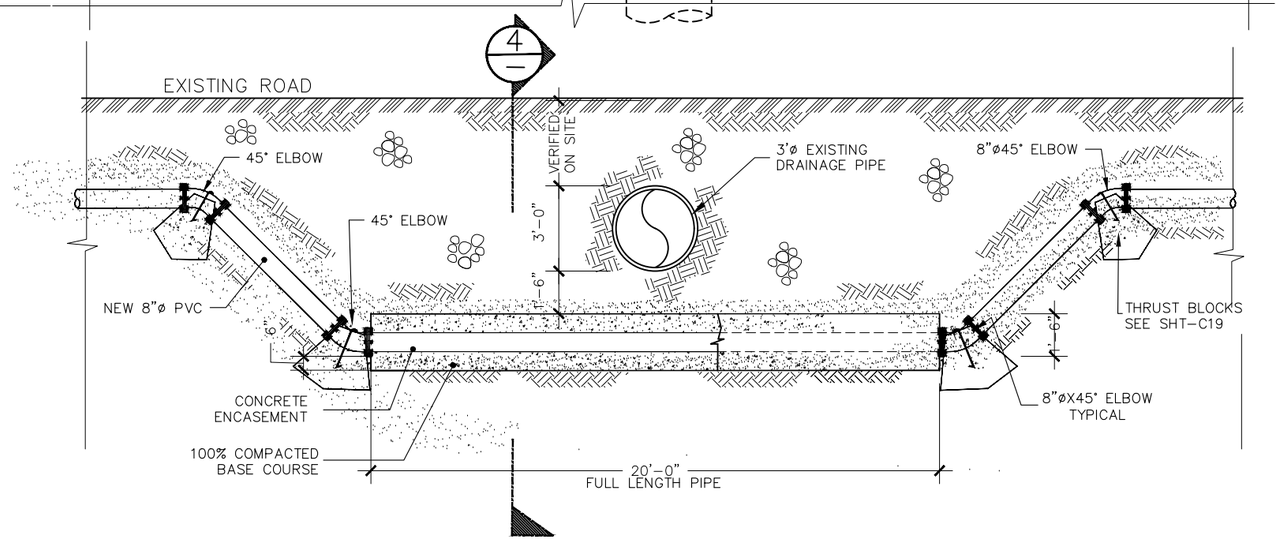

2 DRAINAGE CROSSING SECTION DETAILS
SCALE: 3/16"-0" = 1'-0"

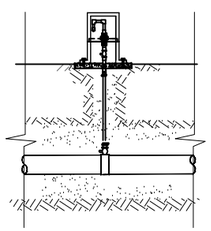

2 ARV VALVE
SCALE: 3/16"=1'-0"

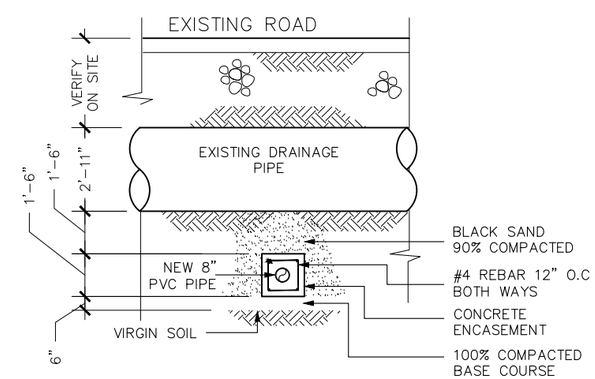

4 DRAINAGE LATITUDE SECTION DETAILS
SCALE: 3/16"-0" = 1'-0"

No.	Description	Date

REV. NO.:
REVISION:
CHECKED BY:
APPROVED BY:
DATE:

DESIGNED BY: F.Toala
CHECKED BY: L.Tyrell
APPROVED BY: F.Aquila / L.Tyrell
ISSUE FOR: Construction

ASPA
AMERICAN SAMOA POWER AUTHORITY

AMERICAN SAMOA POWER AUTHORITY
ENGINEERING SERVICES DIVISION
P.O.BOX PPB, TAFUNA, PAGO PAGO, AS 96799

PROJECT NAME: PHASE 3 VAITOGI HDPE PIPE REPLACEMENT WATERLINE PROJECT
DRAWING TITLE: TYPICAL ROAD DRAINAGE CROSSING SECTIONS & DETAILS
PROJECT LOCATION: VAITOGI VILLAGE, AMERICAN SAMOA

PROJECT NO: #1658785
SIGNATURE:
DATE:

SCALE: AS SHOWN
DATE: JAN-2024
SHEET NO. D07

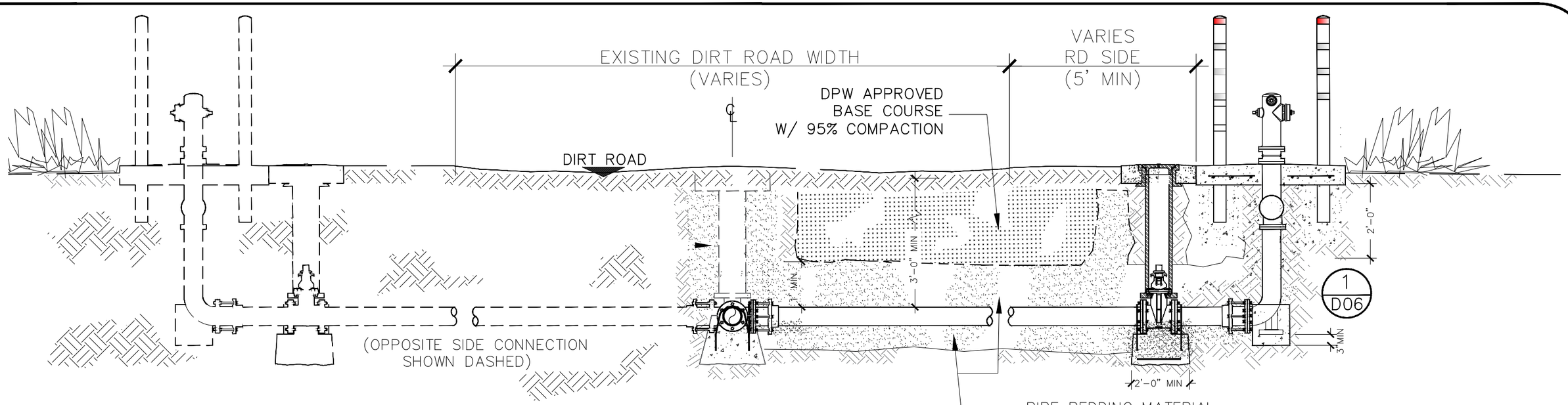

1 — TYPICAL PIPE CROSSING FOR NEW FIRE HYDRANT

SCALE: 3/8"–0" = 1'–0"

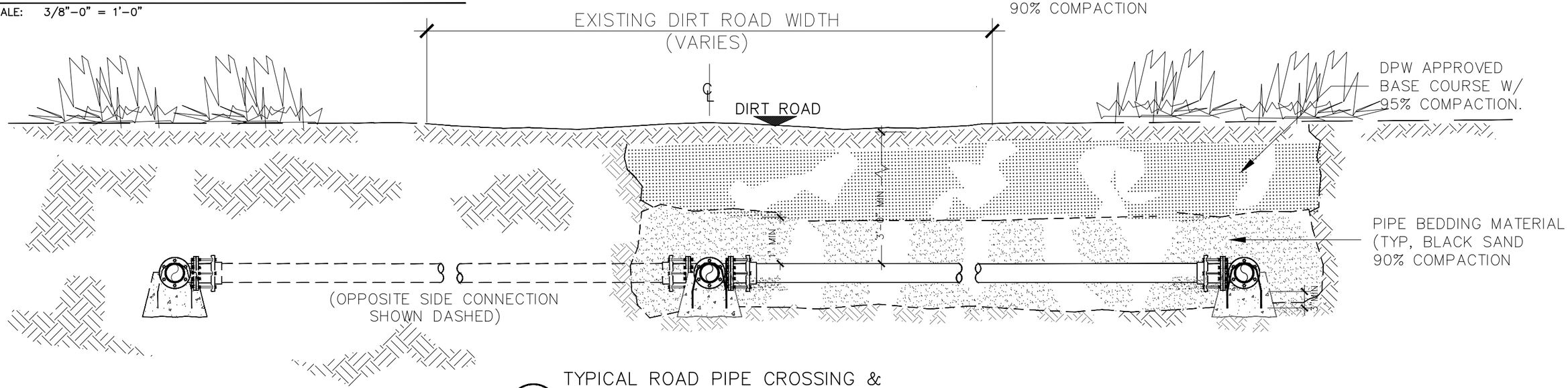

2 — TYPICAL ROAD PIPE CROSSING & LAYOUT FOR NEW FIRE HYDRANT.

SCALE: 3/8"–0" = 1'–0"

No.	Description	Date

REV. NO.:

REVISION:

CHECKED BY:

APPROVED BY:

DATE:

DESIGNED BY: F.Toala

CHECKED BY: L.Tyrell

APPROVED BY: F.Aquila / L.Tyrell

ISSUE FOR: Construction

ASPA
AMERICAN SAMOA POWER AUTHORITY

AMERICAN SAMOA POWER AUTHORITY
ENGINEERING SERVICES DIVISION
P.O.BOX PPB, TAFUNA, PAGO PAGO, AS 96799

PROJECT NAME:
PHASE 3
VAITOGI HDPE PIPE REPLACEMENT
WATERLINE PROJECT

DRAWING TITLE:
TYPICAL (DIRT) ROAD CROSSING SECTION &
PIPE LAYOUT FOR NEW FIRE HYDRANT.

PROJECT LOCATION:
VAITOGI VILLAGE, AMERICAN SAMOA

PROJECT NO: #1658785

SIGNATURE:

DATE:

SCALE: AS SHOWN

DATE: JAN-2024

SHEET NO. D08

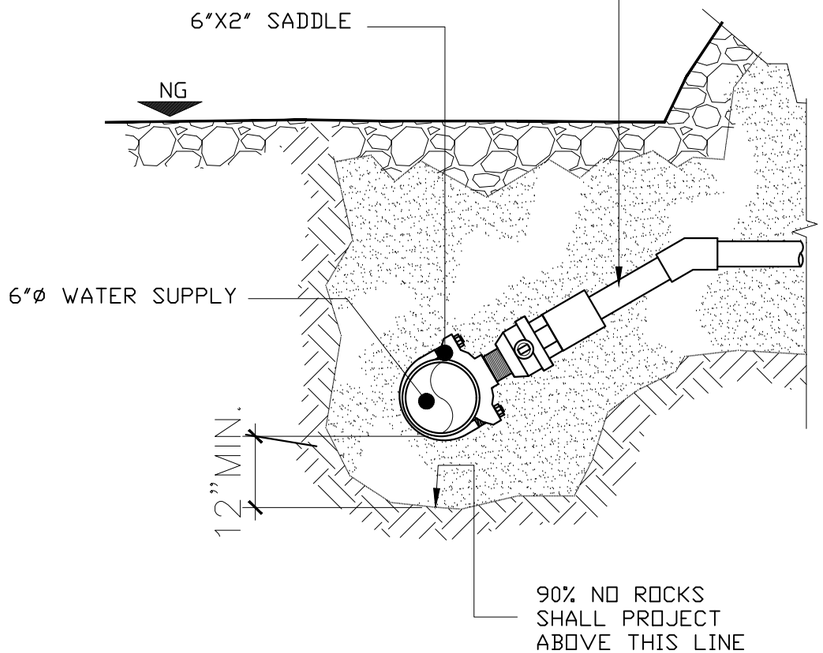

1 - 6"Ø TO 2"Ø CONNECTION (SECTION ELEVATION)
SCALE: 1/2" = 1'

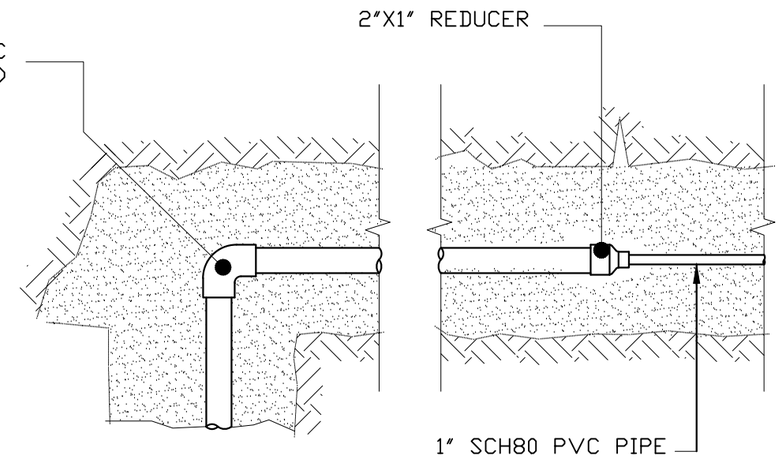

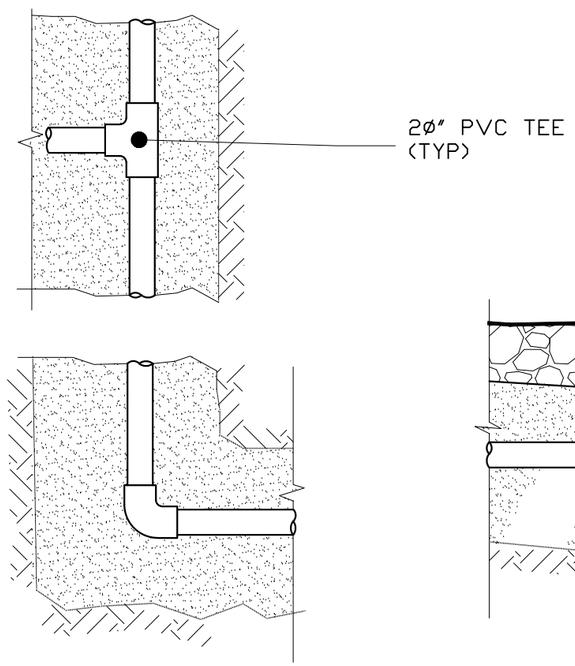

2 - 2" TO 3/4" REDUCER (PLAN ELEVATION)
SCALE: 1/2" = 1'

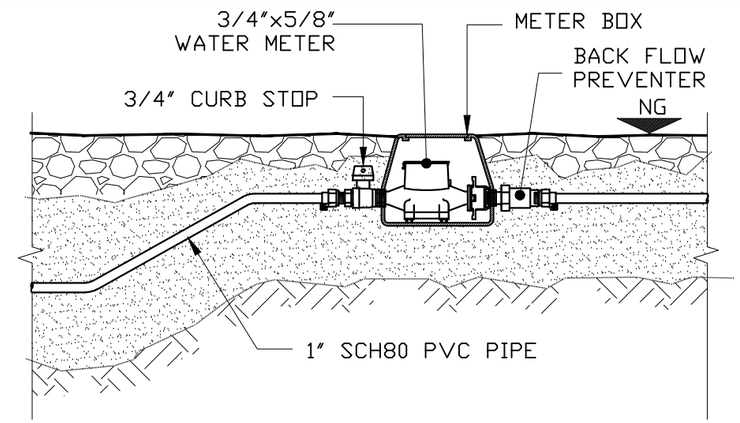

3 - 3/4" WATER METER (SECTION ELEVATION)
SCALE: 1/2" = 1'

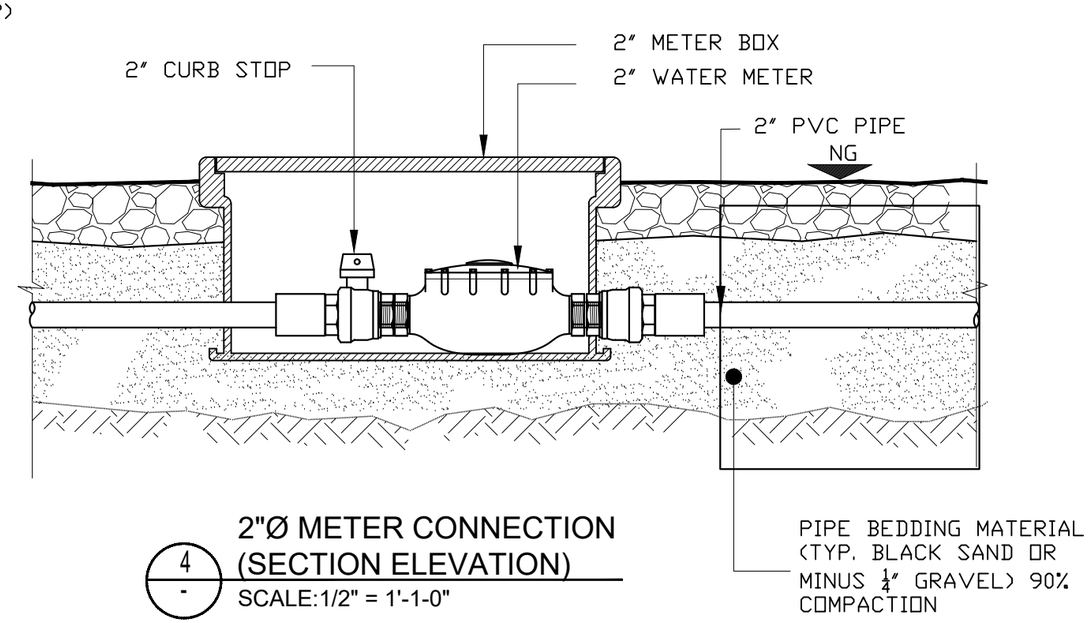

4 - 2"Ø METER CONNECTION (SECTION ELEVATION)
SCALE:1/2" = 1'-1-0"

No.	Description	Date

REV. NO.:
REVISION:
CHECKED BY:
APPROVED BY:
DATE:

DESIGNED BY: F.Toala
CHECKED BY: L.Tyrell
APPROVED BY: F.Aquila / L.Tyrell
ISSUE FOR: Construction

ASPA
AMERICAN SAMOA POWER AUTHORITY

AMERICAN SAMOA POWER AUTHORITY
ENGINEERING SERVICES DIVISION
P.O.BOX PPB, TAFUNA, PAGO PAGO, AS 96799

PROJECT NAME: PHASE 3 VAITOGI HDPE PIPE REPLACEMENT WATERLINE PROJECT
DRAWING TITLE: TYPICAL PVC PIPE SERVICE LINE LAYOUT & CONNECTION DETAILS
PROJECT LOCATION: VAITOGI VILLAGE, AMERICAN SAMOA

PROJECT NO: #1658785
SIGNATURE:
DATE:

SCALE: AS SHOWN
DATE: JAN-2024
SHEET NO. D09

EROSION AND TEMPORARY DUST CONTROL

1. DURING CONSTRUCTION, PREVENTIVE MAINTENANCE MEASURES SHALL BE USED TO CONTROL FORESEEABLE DUST, EROSION OR SEDIMENTATION PROBLEMS WHICH MAY ARISE AS THE JOB PROGRESSES.
2. FUGITIVE DUST AND SOLID WASTE DISPOSAL DURING GRUBBING ACTIVITIES SHALL MEET REQUIREMENTS OF ADMINISTRATIVE RULES, TITLE II, CHAPTER 60, AIR POLLUTION CONTROL AND CHAPTER 58, SOLID WASTE MANAGEMENT CONTROL.
3. THE CONTRACTOR AT HIS OWN EXPENSE, SHALL KEEP THE PROJECT AREA AND SURROUNDING AREA FREE FROM DUST NUISANCE. THE WORK SHALL BE IN CONFORMANCE WITH THE AIR POLLUTION CONTROL STANDARDS AND REGULATIONS OF THE STATE DEPARTMENT OF HEALTH.
4. WHERE CONSTRUCTION ACTIVITY ON A PORTION OF THE SITE IS TEMPORARILY CEASED, AND EARTH DISTURBING ACTIVITIES WILL BE RESUMED WITHIN 14 DAYS, TEMPORARILY STABILIZATION MEASURES DO NOT HAVE TO BE INITIATED ON THAT PORTION OF THE SITE. ALL EXPOSED AREAS TO BE LEFT EXPOSED FOR LONGER THAN FOURTEEN (14) DAYS SHALL BE HYDROMULCH SEEDED WITH RYE GRASS.
5. ALL SLOPES AND EXPOSED AREAS SHALL BE SODDED OR PLANTED AS SOON AS FINAL GRADES HAVE BEEN ESTABLISHED. PLANTING SHALL NOT BE DELAYED UNTIL ALL GRADING WORKS HAS BEEN COMPLETED. GRADING TO FINAL GRADE SHALL BE CONTINUOUS, AND ANY AREA WITHIN WHICH WORK HAS BEEN INTERRUPTED OR DELAYED SHALL BE PLANTED.

BEST MANAGEMENT PRACTICE NOTES

1. MEASURES TO CONTROL EROSION AND OTHER POLLUTANTS SHALL BE IN PLACE BEFORE ANY WORK IS INITIATED. THESE MEASURES SHALL BE PROPERLY CONSTRUCTED AND MAINTAINED THROUGHOUT THE CONSTRUCTION PERIOD.
2. ALL TEMPORARY EROSION CONTROL MEASURES SHALL BE CHECKED AND REPAIRED AS NECESSARY.
3. GRASSING OR MULCHING OF EXPOSED AREAS TO BE DONE AS FINISH GRADES ARE ESTABLISHED.
4. DIVERSION OF STORM RUNOFF AWAY FROM THE FILL SLOPES UNTIL GRASSING ON THE FILL SLOPES ARE ESTABLISHED.
5. PROVIDE STABILIZED CONSTRUCTION ENTRANCE.

NOTES:

1. STABILIZED CONSTRUCTION ENTRANCE SHALL BE MAINTAINED AT THE EGRESS AND INGRESS TO THE SITE. TIRE WASH MAY BE USED IN LIEU OF STABILIZED CONSTRUCTION ENTRANCE. CONTRACTOR IS RESPONSIBLE TO KEEP ROADWAYS CLEAN FROM SOIL AND CONSTRUCTION DEBRIS.
2. DUST CONTROL SHOULD BE APPLIED TO REDUCE DUST EMISSIONS. WATER THE AREA DURING CONSTRUCTION TO CONTROL DUST.
3. ALL STORM DRAIN INLETS ON SITE AND THOSE OFF SITE WHICH MAY RECEIVE RUN OFF FROM THE SITE SHALL USE AN INLET PROTECTION DEVICE.

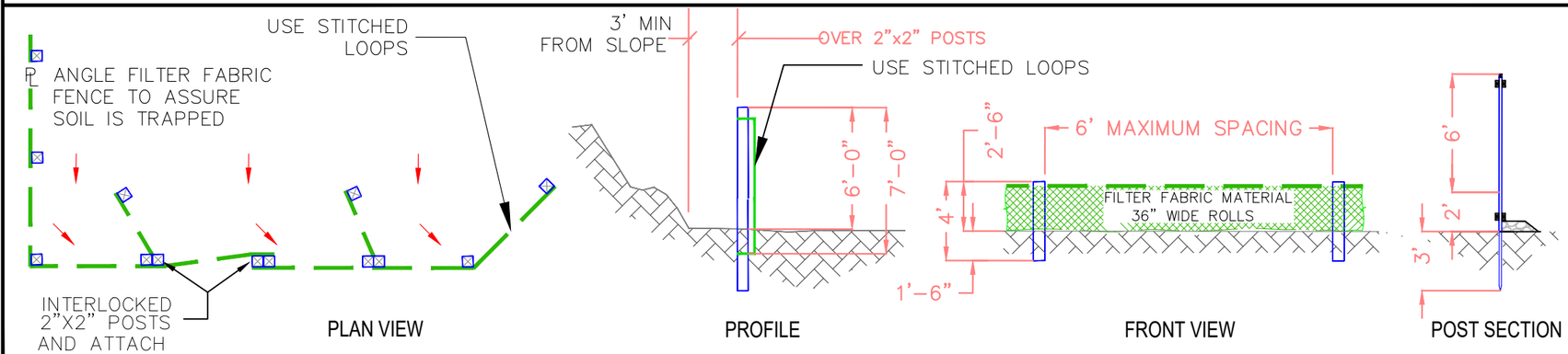

NOTES:

1. BURY BOTTOM OF FILTER FABRIC 6" VERTICALLY BELOW FINISHED GRADE.
2. 2"X2" FIR, PINE OR STEEL FENCE POSTS.
3. POSTS TO BE INSTALLED ON UPHILL SIDE OF SLOPE.
4. COMPACT BOTH SIDES OF FILTER FABRIC TRENCH.
5. PANELS MUST BE PLACED ACCORDING TO SPACING ON DETAIL NO.940

CONSTRUCTION ENTRANCE	CE
SILT FENCE	SF
DIVERSION DIKE	DD
RIGHT-OF-WAY DIVERSION	RWD
TEMPORARY LEVEL SPREADER	LS
TEMPORARY LEVEL DIVERTION	LD
TEMPORARY FILL DIVERSION	TFD
INLET PROTECTION	IP
EC-2 MATTING	B/M
EC-3 MATTING	B/M
EXISTING TREELINE	
EXISTING WATERS	
EXISTING 100' STREAM BUFFER	
PROPOSED TREELINE	
PROPOSED GRADING	
SEDIMENT BASIN DRAINAGE AREA	
PEA GRAVEL LEVEL SPREADER	
PEA GRAVEL LEVEL SPREADER	
LIMIT OF DISTURBANCE	
DC	NOTE: DUST CONTROL MEASURES ARE TO BE USED ONSITE AS NECESSARY THROUGHOUT THE CONSTRUCTION ACTIVITY

No.	Description	Date

REV. NO.:
REVISION:
CHECKED BY:
APPROVED BY:
DATE:

DESIGNED BY: F.Toala
CHECKED BY: L.Tyrell
APPROVED BY: F.Aquila / L.Tyrell
ISSUE FOR: Construction

ASPA
AMERICAN SAMOA POWER AUTHORITY

AMERICAN SAMOA POWER AUTHORITY
ENGINEERING SERVICES DIVISION
P.O.BOX PPB, TAFUNA, PAGO PAGO, AS 96799

PROJECT NAME: PHASE 3 VAITOGI HDPE PIPE REPLACEMENT WATERLINE PROJECT
DRAWING TITLE: EROSION & SEDIMENTATION CONTROL GENERAL NOTES CONSTRUCTION SITE SIGNS & SYMBOLS DEFINITIONS.
PROJECT LOCATION: VAITOGI VILLAGE, AMERICAN SAMOA

PROJECT NO: #1658785
SIGNATURE:
DATE:

SCALE: SCALE TO FIT
DATE: JAN-2024
SHEET NO. ESC-1

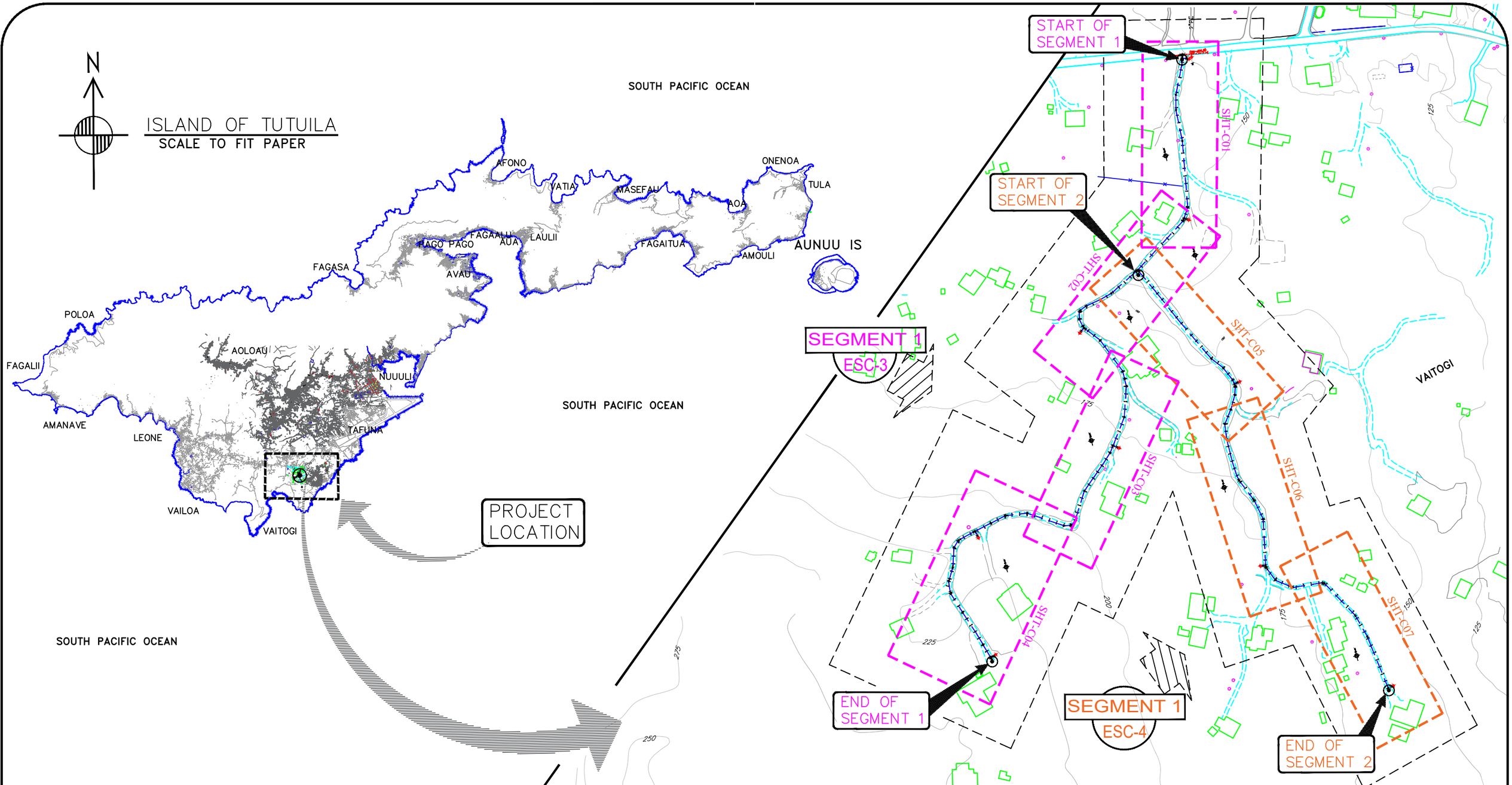

No.	Description	Date

REV. NO.:	
REVISION:	
CHECKED BY:	
APPROVED BY:	
DATE:	

DESIGNED BY:	F.Toala
CHECKED BY:	L.Tyrell
APPROVED BY:	F.Aquila / L.Tyrell
ISSUE FOR:	Construction

ASPA
AMERICAN SAMOA POWER AUTHORITY

AMERICAN SAMOA POWER AUTHORITY
ENGINEERING SERVICES DIVISION
P.O.BOX PPB, TAFUNA, PAGO PAGO, AS 96799

PROJECT NAME:
PHASE 3
VAITOGI HDPE PIPE REPLACEMENT
WATERLINE PROJECT

DRAWING TITLE:
EROSION & SEDIMENTATION CONTROL
/ VICINITY MAP / CONSTRUCTION LOCATION SITE

PROJECT LOCATION:
VAITOGI VILLAGE, AMERICAN SAMOA

PROJECT NO:	#1958785
SIGNATURE:	
DATE:	

SCALE:	SCALE TO FIT
DATE:	JAN-2024
SHEET NO.	ESC-2

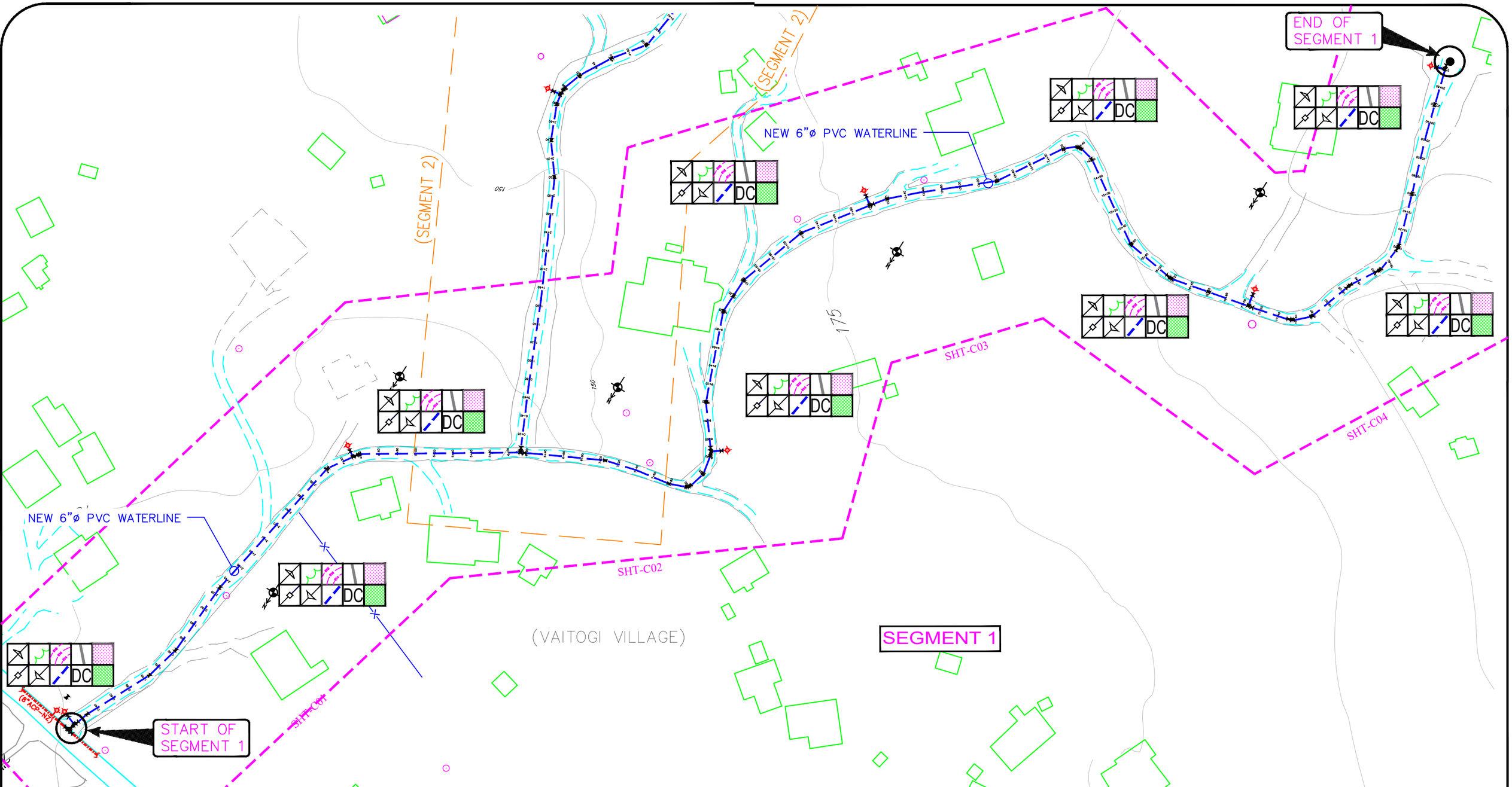

No.	Description	Date

REV. NO.:

REVISION:

CHECKED BY:

APPROVED BY:

DATE:

DESIGNED BY: F.Toala

CHECKED BY: L.Tyrell

APPROVED BY: F.Aquila / L.Tyrell

ISSUE FOR: Construction

ASPA
AMERICAN SAMOA POWER AUTHORITY

AMERICAN SAMOA POWER AUTHORITY
ENGINEERING SERVICES DIVISION
P.O.BOX PPB, TAFUNA, PAGO PAGO, AS 96799

PROJECT NAME:
PHASE 3
VAITOGI HDPE PIPE REPLACEMENT
WATERLINE PROJECT

DRAWING TITLE:
SEGMENT 1,
EROSION & SEDIMENTATION CONTROL
PLAN & PROFILE (STA, 0+00 TO 21+00)

PROJECT LOCATION:
VAITOGI VILLAGE, AMERICAN SAMOA

PROJECT NO: #1958785

SIGNATURE:

DATE:

SCALE: SCALE TO FIT

DATE: JAN-2024

SHEET NO. ESC-3

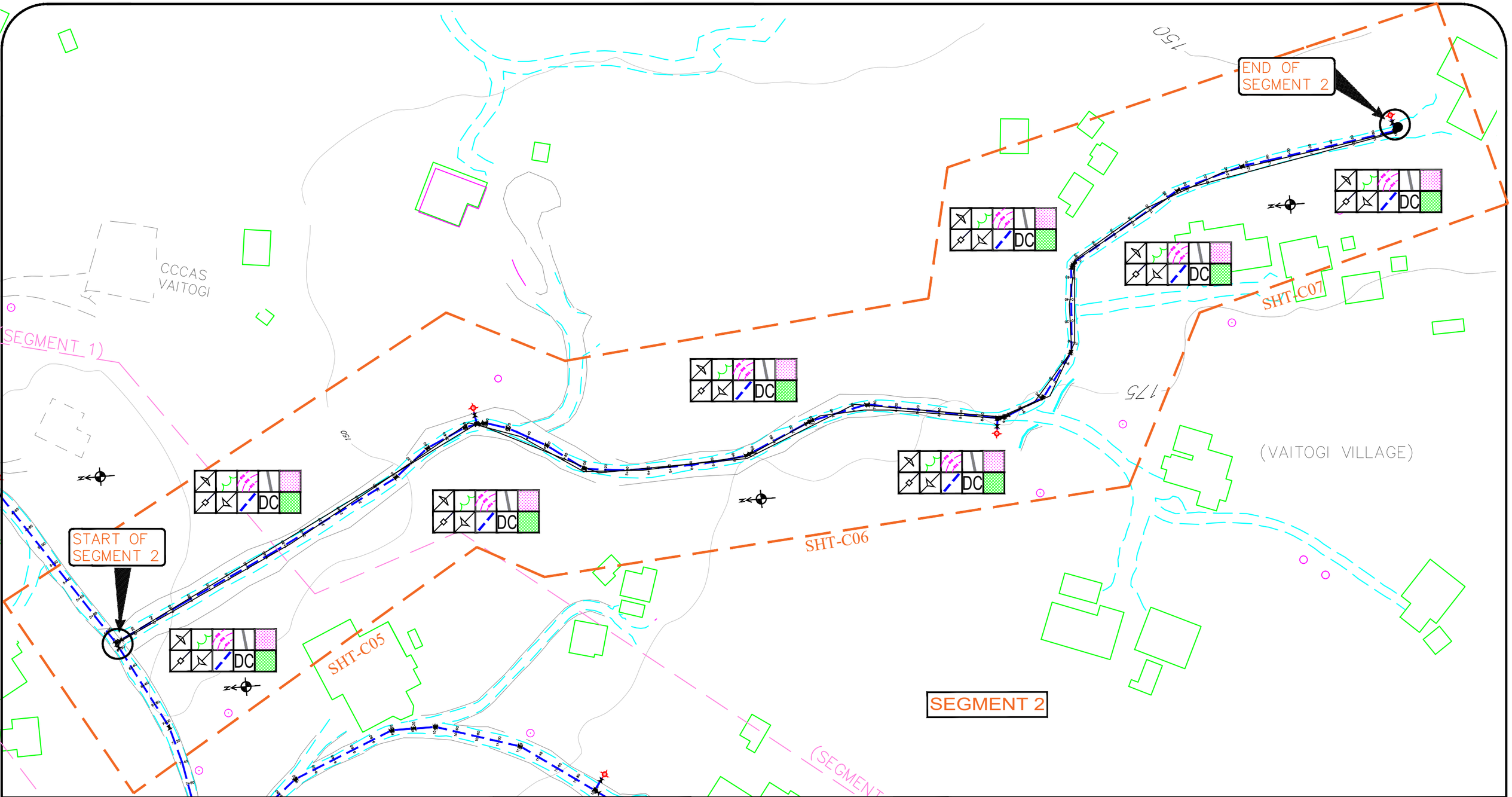

No.	Description	Date

REV. NO:

REVISION:

CHECKED BY:

APPROVED BY:

DATE:

DESIGNED BY: F.Toala

CHECKED BY: L.Tyrell

APPROVED BY: F.Aquila / L.Tyrell

ISSUE FOR: Construction

ASPA
AMERICAN SAMOA POWER AUTHORITY

AMERICAN SAMOA POWER AUTHORITY
ENGINEERING SERVICES DIVISION
P.O.BOX PPB, TAFUNA, PAGO PAGO, AS 96799

PROJECT NAME:
PHASE 3
VAITOGI HDPE PIPE REPLACEMENT
WATERLINE PROJECT

DRAWING TITLE:
SEGMENT 2,
EROSION & SEDIMENTATION CONTROL
PLAN & PROFILE (STA, 0+00 TO 14+00)

PROJECT LOCATION:
VAITOGI VILLAGE, AMERICAN SAMOA

PROJECT NO: #1958785

SIGNATURE:

DATE:

SCALE: SCALE TO FIT

DATE: JAN-2024

SHEET NO. ESC-4

PHASE 3 VAITOGI HDPE PIPE REPLACEMENT WATERLINE PROJECT
TUTUILA ISLAND, AMERICAN SAMOA.

ABBREVIATIONS:

@	AT	PROP	PROPOSED
AFF	ABOVE FINISHED FLOOR	PVC	POLYVINYL CHLORIDE PIPE
AFG	ABOVE FINISHED GRADE	PE	POLYETHYLENE PIPE
AGG	AGGREGATE	ACP	ASBESTOS CEMENT PIPE
ARV	AIR/VAC RELEASE VALVE	GA	GAUGE
AS–EPA	AMERICAN SAMOA ENVIRONMENTAL PROTECTION AGENCY	GALV	GALVANIZED
BLDG	BUILDING	GR	GRADE
CB	CATCH BASIN	GV	GATEVALVE
CI	CAST IRON	HB	HOSE BIB
CL	CENTER LINE	HWY	HIGHWAY
CMP	CORRUGATED METAL PIPE	ID	INSIDE DIAMETER
CO	CLEAN OUT	INSUL	INSULATION
CONC	CONCRETE	INV	INVERT
CP	CONTROL POINT	IR	IRON ROD
DET	DETAIL	JT	JOINT
DIA	DIAMETER	LT	LEFT
DIM	DIMENSION	M	METER
DIP	DUCTILE IRON PIPE	MANUF	MANUFACTURED
DW	DRIVEWAY	MAX	MAXIMUM
E	EAST	MFR	MANUFACTURER
ELEV	ELEVATION	MH	MANHOLE
ELEC	ELECTRICAL	MIN	MINIMUM
EOL	END OF LINE	MISC	MISCELLANEOUS
EOP	EDGE OF PAYMENT	(N)	NEW
EQ	EQUAL	N	NORTH
EXT'G	EXISTING	NIC	NOT IN CONTRACT
EXT	EXTERIOR	NO	NOT OPEN
FD	FLOOR DRAIN	NC	NORMALLY CLOSED
FH	FIRE HYDRANT	NTS	NOT TO SCALE
FIN	FINISHED	OC	ON CENTER
FLR	FLOOR	OD	OUTSIDE DIAMETER
FND	FOUND	OH	OVERHEAD
FT	FEET	OSHA	OCCUPATIONAL SAFETY HEALTH ADMINISTRATION
FTG	FOOTING	SC	SERVICE CONNECTION
PL	PROPERTY LINE		

No.	Description	Date

REV. NO.:
REVISION:
CHECKED BY:
APPROVED BY:
DATE:

DESIGNED BY: F.Toala
CHECKED BY: L.Tyrell
APPROVED BY: F.Aquila / L.Tyrell
ISSUE FOR: Construction

ASPA
AMERICAN SAMOA POWER AUTHORITY

AMERICAN SAMOA POWER AUTHORITY
ENGINEERING SERVICES DIVISION
P.O.BOX PPB, TAFUNA, PAGO PAGO, AS 96799

PROJECT NAME: PHASE 3 VAITOGI HDPE PIPE REPLACEMENT WATERLINE PROJECT
DRAWING TITLE: TABLE OF CONTENTS & ABBREVIATIONS
PROJECT LOCATION: VAITOGI VILLAGE, AMERICAN SAMOA

PROJECT NO: #1958785
SIGNATURE:
DATE:

SCALE: SCALE TO FIT
DATE: JAN-2024
SHEET NO. G1

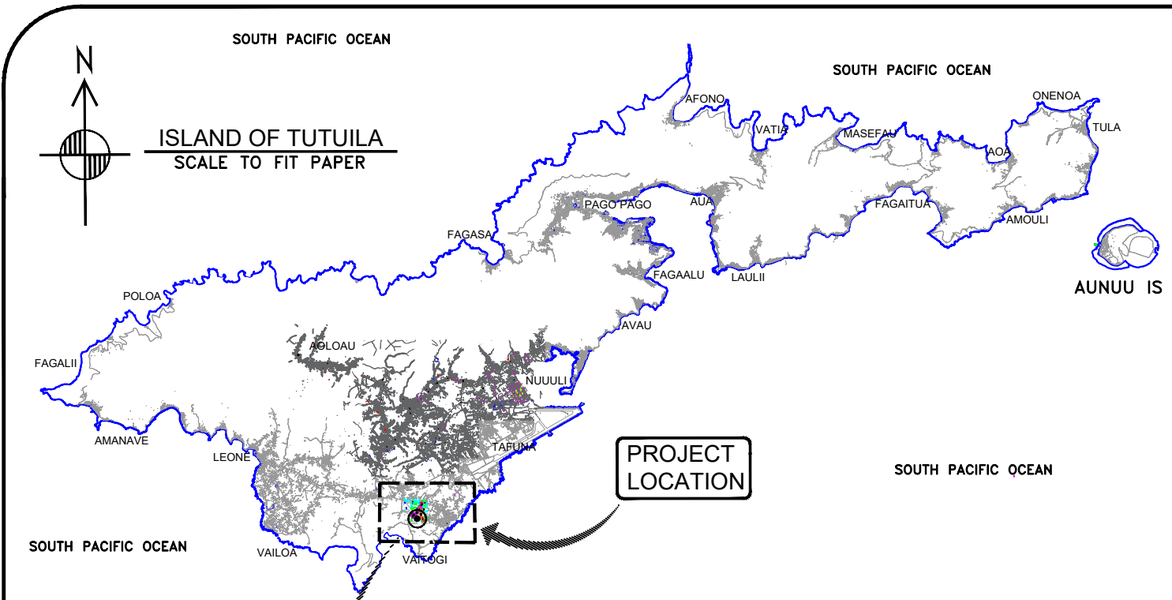

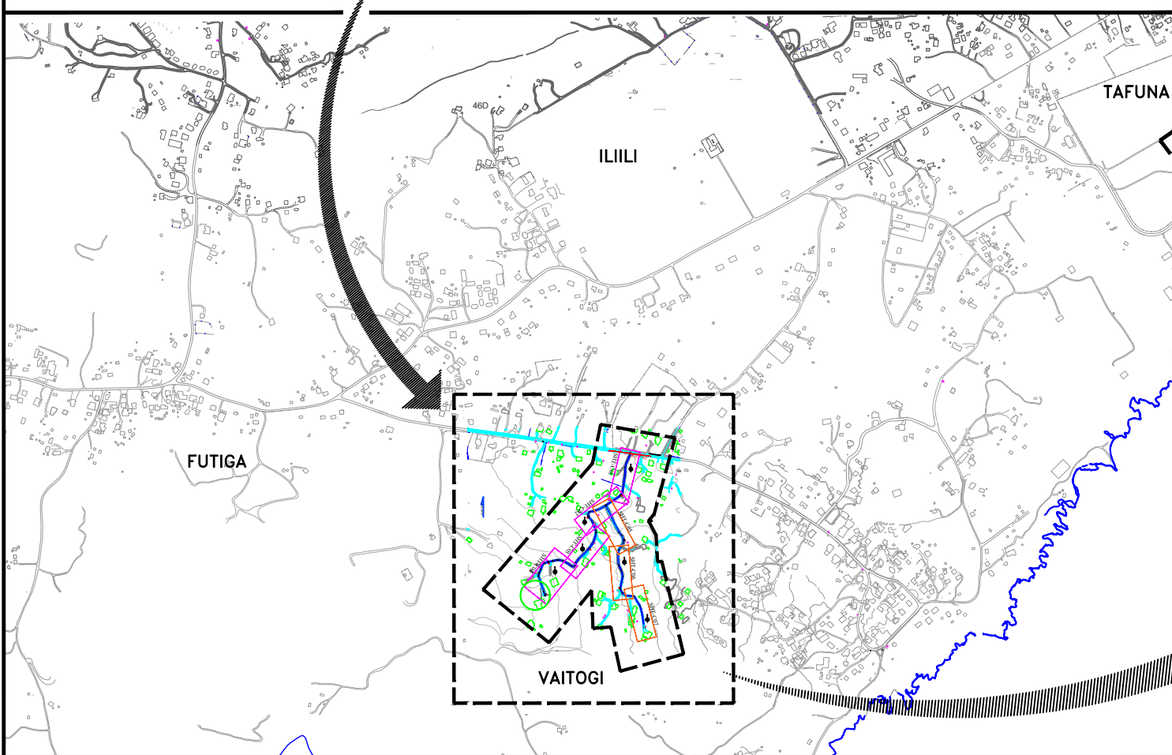

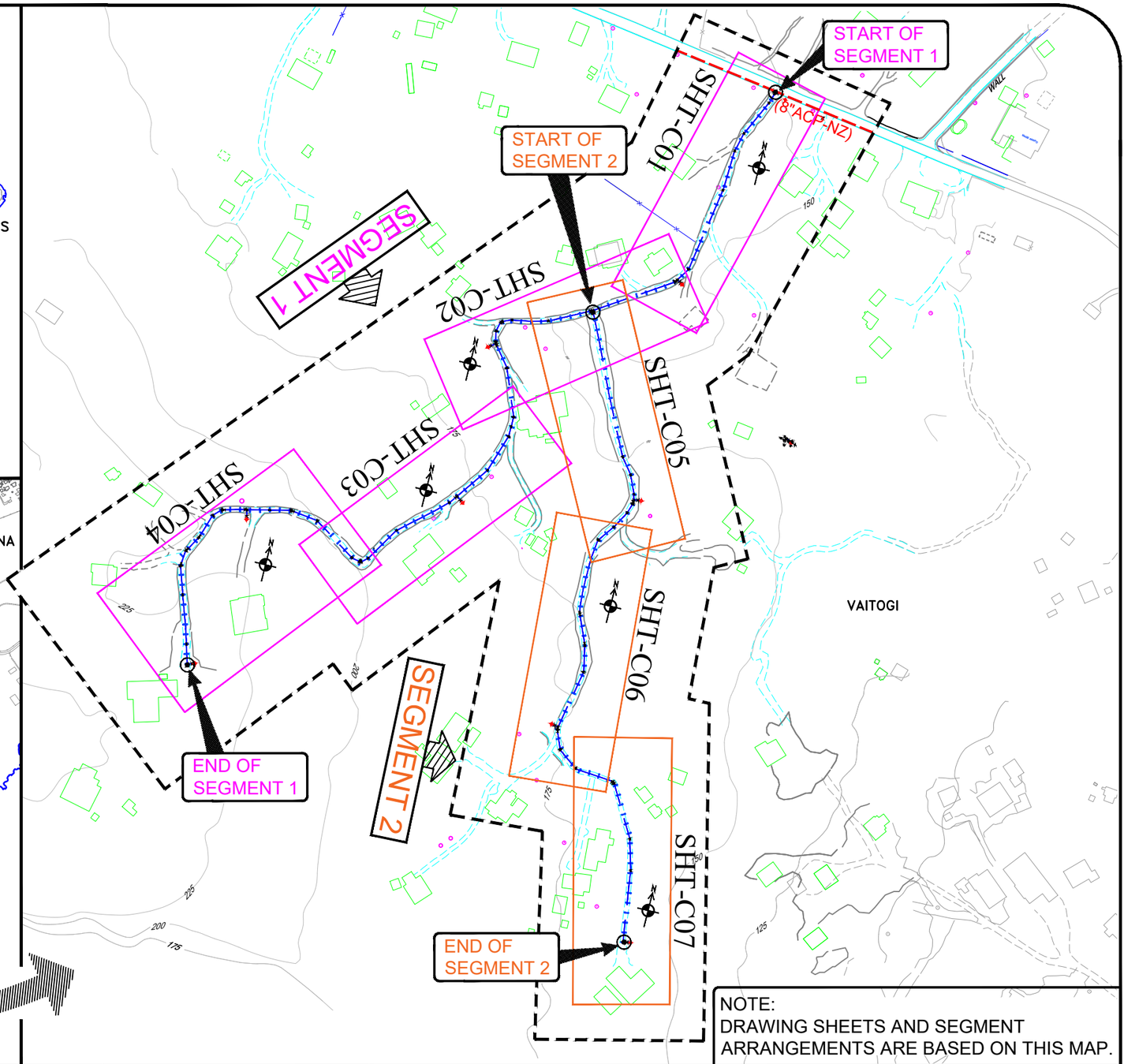

NOTE:
DRAWING SHEETS AND SEGMENT ARRANGEMENTS ARE BASED ON THIS MAP.

No.	Description	Date

REV. NO.:

REVISION:

CHECKED BY:

APPROVED BY:

DATE:

DESIGNED BY: F.Toala

CHECKED BY: L.Tyrell

APPROVED BY: F.Aquila / L.Tyrell

ISSUE FOR: Construction

ASPA
AMERICAN SAMOA POWER AUTHORITY

AMERICAN SAMOA POWER AUTHORITY
ENGINEERING SERVICES DIVISION
P.O.BOX PPB, TAFUNA, PAGO PAGO, AS 96799

PROJECT NAME:
PHASE 3
VAITOGI HDPE PIPE REPLACEMENT
WATERLINE PROJECT

DRAWING TITLE:
VICINITY MAP & SEGMENT LOCATIONS

PROJECT LOCATION:
VAITOGI VILLAGE, AMERICAN SAMOA

PROJECT NO: #1958785

SCALE: SCALE TO FIT

SIGNATURE:

DATE: JAN-2024

DATE:

SHEET NO. G2

LEGEND:

- WATER MAIN
- EXISTING WATER MAIN
- GATE VALVE
- FIRE HYDRANT
- ELBOW
- TEE
- ARV
- EXISTING WELL
- BENCH MARK
- POWER POLE
- WATER METER W/ BOX
- WATER SERVICE LINE
- GATE VALVE W/ BOX
- PAVED ROAD
- UNPAVED ROAD
- SIGN POST
- DIAMETER
- PRESSURE GAUGE
- CONTOUR LINE
- PRV

UTILITY GENERAL NOTES:

1. EXISTING WATERLINE LOCATIONS ARE APPROXIMATE. CONTRACTOR SHALL COORDINATE LOCATING EXISTING UTILITY WITH ASPA OR OWNERS OF UTILITY LINES PRIOR TO EXCAVATION WITH APPROPRIATE ADVANCE NOTIFICATION.

2. ABANDON EXISTING WATER MAIN AND SERVICES IN PLACE ONLY AFTER THE NEW WATER MAIN HAS BEEN DISINFECTED AND APPROVED BY THE AMERICAN SAMOA POWER AUTHORITY (ASPA) AND THE AMERICAN SAMOA ENVIRONMENTAL PROTECTION AGENCY.

3. ALL GATE VALVES ARE TO BE INSTALLED WITH VALVE BOXES PER DRAWINGS AND SPECIFICATIONS.

4. ALL FLUSH VALVES ARE TO BE INSTALLED IN VALVE BOXES PER DRAWINGS AND SPECIFICATIONS.

5. ALL STATION LOCATIONS ARE APPROXIMATE.

6. CONTRACTOR IS RESPONSIBLE FOR MEETING CONDITIONS OF THE PNRS LAND-USE PERMIT.

7. FOR CONFLICT BETWEEN DRAWINGS AND SPECIFICATIONS, PNRS PERMIT REQUIREMENTS AND CONDITIONS SHALL APPLY, THEN SPECIFICATIONS, THEN DRAWINGS.

8. CONTRACTOR MUST CONFORM WITH ALL REQUIREMENTS OF THE OSHA STANDARD FOR EXCAVATION SAFETY (29 CFR 1926 SUBPART P). INCLUDED AMONG THE OSHA STANDARDS IS THE REQUIREMENT FOR PROTECTION OF WORKERS IN EXCAVATIONS 4 FEET OR GREATER IN DEPTH. PROTECTIVE SYSTEMS CAN BE SLOPING/BENCHING OF EXCAVATION WALLS, OR INSTALLATION OF SUPPORT/SHIELDING DEVICES. DESIGN OF PROTECTIVE SYSTEMS MUST BE BASED ON FIELD CLASSIFICATION OF THE SOIL BY A COMPETENT PERSON. PROTECTIVE SYSTEMS MUST BE IN ACCORDANCE WITH THE TABLES AND FIGURES SHOWN IN THE OSHA STANDARDS, OR MUST BE A MANUFACTURED PROTECTION SYSTEM USED IN STRICT CONFORMANCE WITH MANUFACTURER'S INSTRUCTIONS, OR MUST BE A PROTECTION SYSTEM DESIGNED BY A REGISTERED PROFESSIONAL ENGINEER. THE

9. CONTRACTOR SHALL PROVIDE BOTH CONC. ANCHORS & CLAY DIKES AS REQUIRED BY THE ENGINEER AS FOLLOWS:

10%<SLOPE<15%: ONE EVERY 200 LINEAR FEET
CLAY DIKES ONLY
15% OR GREATER SLOPES:
EVERY 100 LINEAR FEET-CONC. ANCHORS & CLAY DIKES.

A.) CLAY DIKES SHALL EXTEND FOR THE FULL TRENCH WIDTH (USED FOR PIPE BEDDING AND COVER) AND HAVE A LENGTH OF 5 FEET. LOCATED IN THE MIDDLE OF PIPE LENGTH, AT LEAST 2 FEET FROM A PIPE JOINT. MATERIALS SHALL BE CLAY AS DESIGNATED "CL" AND DEFINED UNDER THE UNIFIED SOIL CLASSIFICATION SYSTEM.

B.) CONC. ANCHORS SHALL BE LOCATED AT THE DOWNSTREAM SIDE OF JOINTS, SHALL BE UN-REINFORCED AND SHALL BE MINIMUM OF TRENCH WIDTH, 3 FEET HIGH (REPLACING PIPE BEDDING AND COVER) AND 2 FEET THICK.

10. LEVEL SURVEY & TOPOGRAPHIC MAPS USED FOR PLAN SHEETS ARE DATED FEB. 2006, CONDUCTED BY ASG/SURVEY DEPT. BUILDINGS AND ROADWAYS WERE UPDATED BY AERIAL PHOTOGRAPHY DURING AUGUST/SEPTEMBER 1990. LOCATIONS, BUILDING LOCATIONS, AND OTHER FEATURES MAY HAVE CHANGED SINCE THE LAST MAP UPDATE.

11. UTILITIES KNOWN TO EXIST BY THE ENGINEER FROM RESEARCH OF THE AVAILABLE RECORDS ARE SHOWN ON THE DRAWINGS. NO RESPONSIBILITY IS CLAIMED FOR COMPLETENESS OR ACCURACY. PRIOR TO STARTING CONSTRUCTION, VERIFY LOCATION AND ELEVATION OF ALL EXISTING UTILITIES WHICH MAY INTERFERE WITH THE FACILITIES INSTALLED UNDER THIS CONTRACT.

12. ELEVATIONS USED IN THE DRAWINGS ARE BASED ON 0.00 AT THE MEAN SEA LEVEL, HORIZONTAL COORDINATES ARE BASED ON THE AMERICAN SAMOA COORDINATE SYSTEM GRID.

13. PROVIDE, INSTALL, AND MAINTAIN SIGNS BARRICADES, MARKERS, CONES AND PROTECTIVE FACILITIES AND TAKE ALL NECESSARY PRECAUTIONS FOR THE PROTECTION, CONVENIENCE AND SAFETY OF THE PUBLIC DURING THE CONSTRUCTION OPERATIONS, CONFORM TO THE REQUIREMENTS OF THE DEPARTMENT OF PUBLIC SAFETY AND THE DEPARTMENT OF PUBLIC WORKS IN REGARD TO TRAFFIC SAFETY WHILE WORKING IN THE PUBLIC RIGHT-OF-WAY. ALL TRAFFIC CONTROL PLANS MUST BE APPROVED BY DPS AND PUBLIC WORKS PRIOR TO START OF CONSTRUCTION.

14. MAINTAIN TWO-WAY TRAFFIC ON HIGHWAY AT ALL TIMES UNLESS PRIOR PERMISSION TO CLOSE ONE LANE IS OBTAINED FROM THE DEPARTMENT OF PUBLIC SAFETY. IF THE LANE CLOSURE IS REQUIRED, PROPER ADVANCE NOTICE TO PUBLIC VIA NORMAL PUBLICATION OR RADIO ANNOUNCEMENTS IS REQUIRED.

15. KEEP THE WORK SITE AND SURROUNDING AREAS FREE FROM DUST NUISANCE. DUST CONTROL, SEDIMENTATION CONTROL, AND ALL SUCH PLANS MUST BE APPROVED BY THE AMERICAN SAMOA ENVIRONMENTAL PROTECTION AGENCY PRIOR TO START OF CONSTRUCTION.

16. REMOVE ALL SILT AND DEBRIS RESULTING FROM THE WORK AND DEPOSITED IN DRAINAGE FACILITIES, ROADWAYS, AND OTHER AREAS WHEN NECESSARY. CONSTRUCT SILT FENCES AND OTHER EROSION CONTROL DEVICES AROUND THE WORK TO PREVENT DAMAGE TO STREAMS OR OTHER WATERWAYS.

17. BARRICADE OPEN EXCAVATIONS AND POST WITH WARNING LIGHTS. KEEP UNATTENDED EXCAVATIONS FREE OF WATER AND MAINTAIN SLOPING AND STABLE WALLS WHEN OVER 4 FEET DEEP. LEAVE A LADDER OR OTHER DEVICE TO ALLOW ESCAPE FROM EXCAVATION. WHEN PERSONNEL ARE IN THE EXCAVATION, AT LEAST 2 MEANS OF EGRESS ARE REQUIRED. LADDERS ARE REQUIRED TO ALLOW NOT MORE THAN 25 FEET OF LATERAL TRAVEL FOR TRENCH EGRESS.

18. THE CONTRACTOR IS RESPONSIBLE FOR PROVIDING ALL NECESSARY EQUIPMENT AND MATERIALS FOR TESTING WATERLINES.

19. ROADS AND PROPERTIES AFFECTED BY EXCAVATION MUST BE REFURBISHED TO ORIGINAL STATUS OR BETTER AT COMPLETION OF PROJECT.

20. CONTRACTOR TO PROVIDE ELECTRONIC AS-BUILT DRAWINGS IN AUTODESK LAND DEVELOPMENT 2006 OR A RECENT VERSION THEREOF, OF ALL APPURTENANCES AND SURVEY REFERENCE POINTS TO ACCEPTABLE LOCATIONS. MINIMAL REQUIREMENT OF 2 POINTS FOR MINOR AND 3 POINTS FOR MAJOR APPURTANCES.

21. MAINTAIN WATER AND SEWER LINE SEPARATION IN ACCORDANCE WITH REGULATIONS.

22. INSTALL DETECTABLE WARNING TAPE AND CONDUCTOR TAPE ON TOP OF ALL PIPE.

23. ALL REBARS SHOULD BE EPOXY COATED. UNLESS DIRECTED BY ENGINEER

24. CONSTRUCT SWALES AS SHOWN IN DETAILS WHENEVER SLOPE EXCEEDS 8%.

No.	Description	Date

REV. NO.:	
REVISION:	
CHECKED BY:	
APPROVED BY:	
DATE:	

DESIGNED BY:	F.Toala
CHECKED BY:	L.Tyrell
APPROVED BY:	F.Aquila / L.Tyrell
ISSUE FOR:	Construction

AMERICAN SAMOA POWER AUTHORITY
ENGINEERING SERVICES DIVISION
P.O.BOX PPB, TAFUNA, PAGO PAGO, AS 96799

PROJECT NAME:	PHASE 3 VAITOGI HDPE PIPE REPLACEMENT WATERLINE PROJECT
DRAWING TITLE:	LEGEND UTILITY GENERAL NOTES
PROJECT LOCATION:	VAITOGI VILLAGE, AMERICAN SAMOA

PROJECT NO:	#1958785
SIGNATURE:	
DATE:	

SCALE:	SCALE TO FIT
DATE:	JAN-2024
SHEET NO.	G3

CONSTRUCTION NOTES:

1. THE CONTRACTOR SHALL COORDINATE HIS HAUL ROUTE STAGING AREA AND ALL ASSOCIATED REQUIREMENTS, SUCH AS, LAND USE PERMIT, WITH THE PNRS, CONTRACTING OFFICER, AND AFFECTED LANDOWNER.
2. A SEPARATE LAND USE PERMIT MUST BE OBTAINED BY THE CONTRACTOR IF THE CONTRACTOR'S STAGING AREA OR ANY WORK IS OUTSIDE THE LIMITS OF THE CONTRACT. THE EXISTING LAND USE PERMIT IS CONDITIONED ON A DIVISION OF MARINE AND WILDLIFE RESOURCES REVIEW PRIOR TO CONSTRUCTION.
3. THE CONTRACTOR SHALL BE RESPONSIBLE FOR THE CLEARING AND REMOVAL OF ALL SILT AND DEBRIS GENERATED BY HIS GRADING AND CONSTRUCTION WORK AND DEPOSITED AND ACCUMULATED ON ROADWAYS AND OTHER AREAS.
4. ALL EXISTING UTILITIES, CONCRETE WALKWAYS, STEPS AND WALLS, WHETHER OR NOT SHOWN ON THE DRAWINGS, EXCEPT THOSE DESIGNATED TO BE REMOVED, SHALL BE PROTECTED FROM DAMAGED AT ALL TIMES DURING CONSTRUCTION AND GRADING WORK. ANY DAMAGES TO THEM SHALL BE REPAIRED BY THE CONTRACTOR AT HIS EXPENSE.
5. THE CONTRACTOR SHALL VERIFY DIMENSIONS, LOCATIONS, ELEVATIONS, ETC. THAT ARE INDICATED FOR VERIFICATION AND INFORM THE CONTRACTING OFFICER IN WRITING OF ANY DIFFERENCES PRIOR TO INSTALLATION OF NEW FACILITIES.
6. THE CONTRACTOR SHALL TONE AND PROBE THE AREA PRIOR TO ALL EXCAVATION AND TRENCHING TO VERIFY THE LOCATION OF ALL EXISTING UTILITIES AND SHALL BE RESPONSIBLE FOR REPAIR OR REPLACEMENT OF SAME IN THE EVENT OF DAMAGES DUE TO CONTRACTORS CONSTRUCTION PRACTICES. WHENEVER CONNECTIONS OF NEW UTILITIES TO EXISTING UTILITIES ARE SHOWN ON THE PLANS, THE CONTRACTOR SHALL EXPOSE THE EXISTING LINES AT THE PROPOSED CONNECTIONS TO VERIFY THEIR LOCATIONS, DEPTHS AND ASSURE THAT CONNECTIONS CAN BE MADE PRIOR TO EXCAVATION FOR THE NEW LINES AT NO COST TO THE OWNER. ANY NECESSARY ADJUSTMENTS FOR THE NEW LINES TO ENSURE PROPER CONNECTIONS TO THE EXISTING SHALL BE THE CONTRACTOR'S RESPONSIBILITY. THE CONTRACTOR SHALL ALSO CONTACT ASPA, BLUESKY AND ASTCA TO PROPERLY LOCATE THE UNDERGROUND UTILITIES AND CABLES THAT LIE IN AND ADJACENT TO THE WORK AREA.
7. WORK SHALL BE DONE BETWEEN 7:30AM AND 4:00PM SAMOA STANDARD TIME. NO WORK SHALL BE DONE ON SATURDAYS, SUNDAYS, FEDERAL HOLIDAYS OR AFTER NORMAL WORK HOURS AT ANY TIME, WITHOUT SPECIAL ARRANGEMENT AND PRIOR APPROVAL BY THE CONTRACTING OFFICER. PROJECT WORK SHALL BE IN CONFORMANCE WITH APPLICABLE FEDERAL AND LOCAL LAWS AND REGULATIONS REGARDING COMMUNITY NOISE CONTROL.
8. THE CONTRACTOR SHALL BE RESPONSIBLE FOR THE PROTECTION OF ALL WATERLINES DURING CONSTRUCTION. THE CONTRACTOR SHALL BE ESPECIALLY CAREFUL WHEN EXCAVATING BEHIND WATERLINE TEES AND BENDS WHEREVER THERE IS POSSIBILITY OF WATERLINE MOVEMENT DUE TO REMOVAL OF THE SUPPORTING EARTH BEYOND THE EXISTING REACTION BLOCKS. THE CONTRACTOR SHALL TAKE WHATEVER MEASURE TO PROTECT THE WATERLINE SUCH AS CONSTRUCTING SPECIAL REACTION BLOCKS AND/OR MODIFYING HIS CONSTRUCTION METHODS.
9. NO BLASTING WILL BE ALLOWED ON THIS PROJECT.
10. THE CONTRACTOR SHALL PROTECT EXISTING PUBLIC AND PRIVATE FACILITIES AND UTILITIES, AND PROVIDE SHORING DURING EXCAVATION. THE CONTRACTOR SHALL REPAIR, AT HIS COST, ALL DAMAGES DUE TO EXCAVATION.
11. THE CONTRACTOR SHALL COORDINATE WITH ASPA, ASC, BLUESKY COMMUNICATIONS AND ASTCA FOR ALL NEW POLE INSTALLATION, POWER, TELEVISION AND COMMUNICATIONS RELOCATIONS, AND REMOVAL OF EXISTING POLES. IF THE CONTRACTOR SHALL PROVIDE RELOCATIONS, REMOVAL OF EXISTING POLES. THE CONTRACTOR SHALL PROVIDE SUPPORTS FOR THE EXISTING POLES AFFECTED BY EXCAVATION. THE CONTRACTOR SHALL NOTIFY AFFECTED VILLAGES AND THE UTILITY COMPANIES SEVEN (7) DAYS PRIOR TO SERVICE INTERRUPTIONS. THESE NOTIFICATIONS SHALL BE AT THE CONVENIENCE OF ASPA, ASC, BLUESKY COMMUNICATION AND ASTCA.
12. THE CONTRACTOR SHALL PROVIDE ALL LAND SURVEY CONSTRUCTION STAKEOUT SERVICES, SOIL AGGREGATE, CONCRETE AND PAVEMENT MONITORING, AND SAMPLING AND TESTING SERVICES.
13. WASTE MATERIAL WILL BE DISPOSED OF AT AN APPROVED, PNRS-COMPLIANT, OFF-SITE DISPOSAL AREA. THE CONTRACTOR SHALL BE RESPONSIBLE FOR OBTAINING DISPOSAL AREA.
14. THE CONTRACTOR SHALL TAKE EXTREME CARE IN PERFORMING WORK NEAR EXISTING CONCRETE ELECTRICAL/COMMUNICATION DUCTS. APPROPRIATE PROTECTION SHALL BE IMPLEMENTED AS REQUIRED TO PREVENT DAMAGE TO THIS LINE.
15. THE CONTRACTOR SHALL VERIFY, BASED ON THE SITE CONDITIONS AND CONTRACT BASELINE DATA, WITH OVERVIEW AND APPROVAL BY AN AUTHORIZED REPRESENTATIVE OF AMERICAN SAMOA POWER AUTHORITY, THE LOCATION OF ALL EXISTING POLES WHICH IMPACT THE CONSTRUCTION AND ULTIMATE USE OF THE PROPOSED ROAD.
16. THE CONTRACTOR SHALL VERIFY, BASED ON OVERVIEW AND APPROVAL BY AUTHORIZED REPRESENTATIVE OF AMERICAN SAMOA GOVERNMENT OFFICE OF COMMUNICATIONS, THE LOCATIONS AND DEPTH OF EXISTING UNDERGROUND TELEPHONE CABLES. RELOCATE EXISTING DIRECT BURIED CABLES WHICH IMPACT THE CONSTRUCTION AND FINAL USE OF THE PROPOSED ROAD. EITHER INTO A NEW TRENCH AWAY FROM THE ROAD OR IN PVC SCHEDULE80 SLEEVES THROUGH THE ROAD AT A MINIMUM DEPTH OF 3' BELOW FINISHED GRADE IF THE CABLES CANNOT BE RELOCATED. TO EXPOSE THE CABLE, THE CONTRACTOR SHALL TONE FOR THE CABLE AND HAND EXCAVATE THE CABLE TAKING CARE NOT TO DAMAGE THE JACKET AND INSULATION. BASIS OF BID SHALL BE 100 LINEAR FEET OF DIRECT BURIED CABLE.
17. THE CONTRACTOR SHALL REMOVE ALL EXISTING PAVEMENT AND CROSSING ALONG THE NEW ROADWAY. ALL DEMOLITION AND REMOVAL OF EXISTING PAVEMENT SHALL BE CONSIDERED INCIDENTAL TO ROADWAY CONSTRUCTION.
18. ALL TRAFFIC SIGN AND PAVEMENT MARKERS SHALL BE IN ACCORDANCE WITH THE MANUAL ON UNIFORM TRAFFIC CONTROL DEVICES (MUTCD) 2003 EDITION, AND ALL SUBSEQUENT AMENDMENTS AND ADDITIONS.
19. AT THE END OF THE WORKDAY OR AS SOON AS WORK IS COMPLETED, THE CONTRACTOR SHALL TAKE NECESSARY MEASURES TO ENSURE THAT PUBLIC TRAFFIC HAS SAFE PASSAGE AND THAT ALL OPEN HOLES ARE PROPERLY COVERED AND MAINTAINED DURING THE DURATION OF THE PROJECT.
20. IF THE CONTRACTOR UNCOVERS ANY CULTURAL REMAINS, DURING EXCAVATION WORK, THE CONTRACTOR SHALL STOP WORK IN THE AREA OF THE FINDINGS AND NOTIFY THE CONTRACTING OFFICER AND THE AMERICAN SAMOA GOVERNMENT (ASHPO AND ASPA)

No.	Description	Date

REV. NO.:	
REVISION:	
CHECKED BY:	
APPROVED BY:	
DATE:	

DESIGNED BY:	F.Toala
CHECKED BY:	L.Tyrell
APPROVED BY:	F.Aquila / L.Tyrell
ISSUE FOR:	Construction

ASPA
AMERICAN SAMOA POWER AUTHORITY

AMERICAN SAMOA POWER AUTHORITY
ENGINEERING SERVICES DIVISION
P.O.BOX PPB, TAFUNA, PAGO PAGO, AS 96799

PROJECT NAME:	PHASE 3 VAITOGI HDPE PIPE REPLACEMENT WATERLINE PROJECT
DRAWING TITLE:	CONSTRUCTION NOTES
PROJECT LOCATION:	VAITOGI VILLAGE, AMERICAN SAMOA

PROJECT NO: #1958785	SCALE: SCALE TO FIT
SIGNATURE:	DATE: JAN-2024
DATE:	SHEET NO. G4

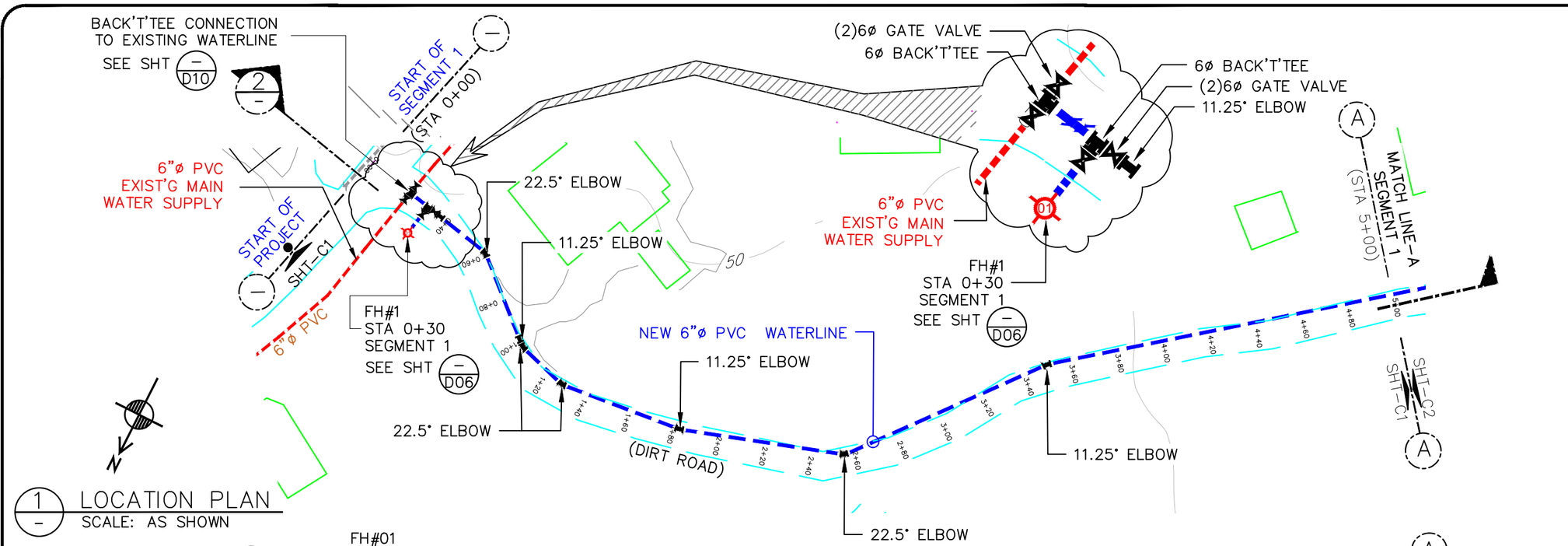

1 LOCATION PLAN
SCALE: AS SHOWN

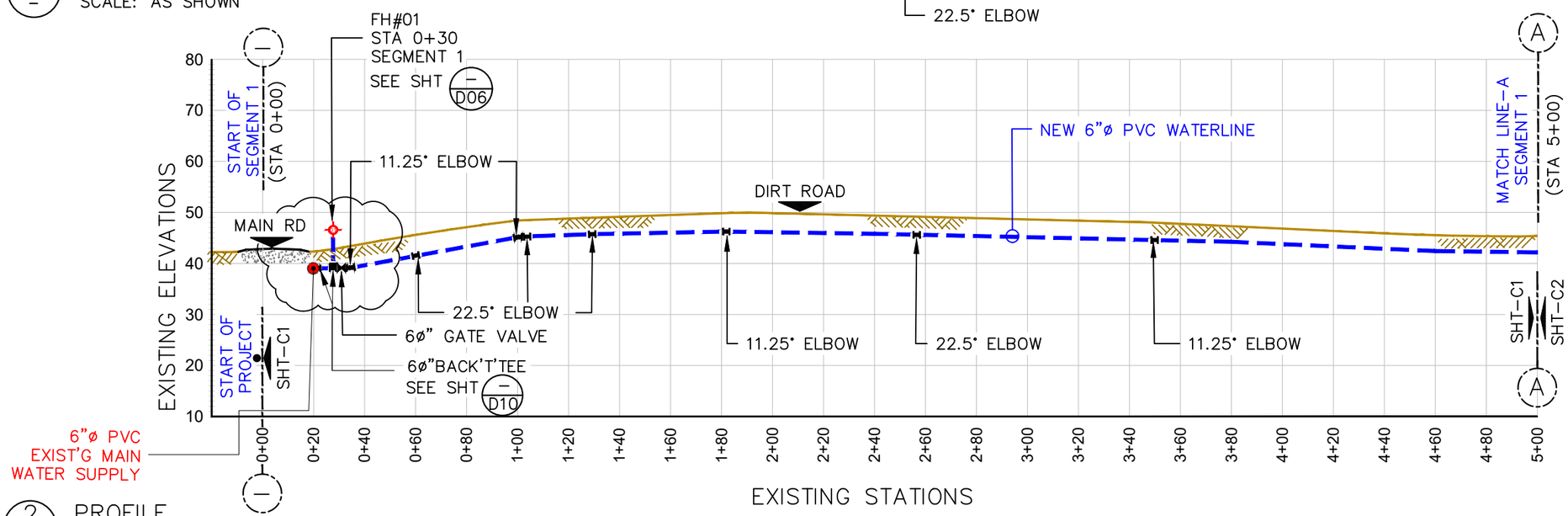

2 PROFILE
SCALE: AS SHOWN

LEGEND:

EXISTING WATER SERVICE:	
EXISTING ACP WATER:	
NEW 6ø" PVC WATER:	
TELEPHONE CONDUIT:	
EXISTING STORM DRAIN:	
EXISTING SEWER MAIN:	
GATE VALVE:	
POWER/TEL POLE:	
AIR RELIEVE VALVE:	
ELBOWS:	11.25° 22.5° 45° 90° BACK TEE
FIRE HYDRANT:	
BAC-T SAMPLING STN:	
SERVICE METER:	
STUB-OUT:	
PRV / PSV :	
EXISTING SERVICE LINE TRANSFERRED TO NEW LINE:	
TREES:	HEDGES:
ROCK WALL:	WIRE FENCE:

NOTES:
CONSTRUCTION CONTRACTOR SHALL FIELD VERIFY ALL EXISTING UNDERGROUND INFRASTRUCTURE TO ENSURE SAFETY OF ITS WORKERS AND AVOID ANY DAMAGES TO EXISTING GOVERNMENT UTILITIES.

ALL EXISTING FIRE HYDRANT TO BE TRANSFERRED TO NEW LINE.
SEE SHT-D06 FOR FIRE HYDRANT CONNECTION DETAILS.

INSTALL 2"ø x 6"ø SADDLE FOR NEW SERVICE CONNECTION @ EVERY 500 FEET

0 50' 100'
SCALE IN FEET
HORIZ. 1": 20'

0 40' 80'
SCALE IN FEET
VERT. 1": 20'

No.	Description	Date

REV. NO.:	
REVISION:	
CHECKED BY:	
APPROVED BY:	
DATE:	

PREPARED BY:	F.Toala
CHECKED BY:	L.Tyrell
APPROVED BY:	F.Aquila,L.Tyrell
ISSUE FOR:	Construction

AMERICAN SAMOA POWER AUTHORITY
ENGINEERING SERVICES DIVISION
P.O.BOX PPB, TAFUNA, PAGO PAGO, AS 96799

PROJECT NAME: VAITOGI ACP WATERLINE REPLACEMENT	SCALE: AS SHOWN	PROJECT NO:
DRAWING TITLE: SEGMENT 1 START PLAN & PROFILE (STA, 0+00 TO 5+00)	DATE: SEP-2022	SIGNATURE:
PROJECT LOCATION: VAITOGI VILLAGE, AMERICAN SAMOA	SHEET NO. C01	DATE:

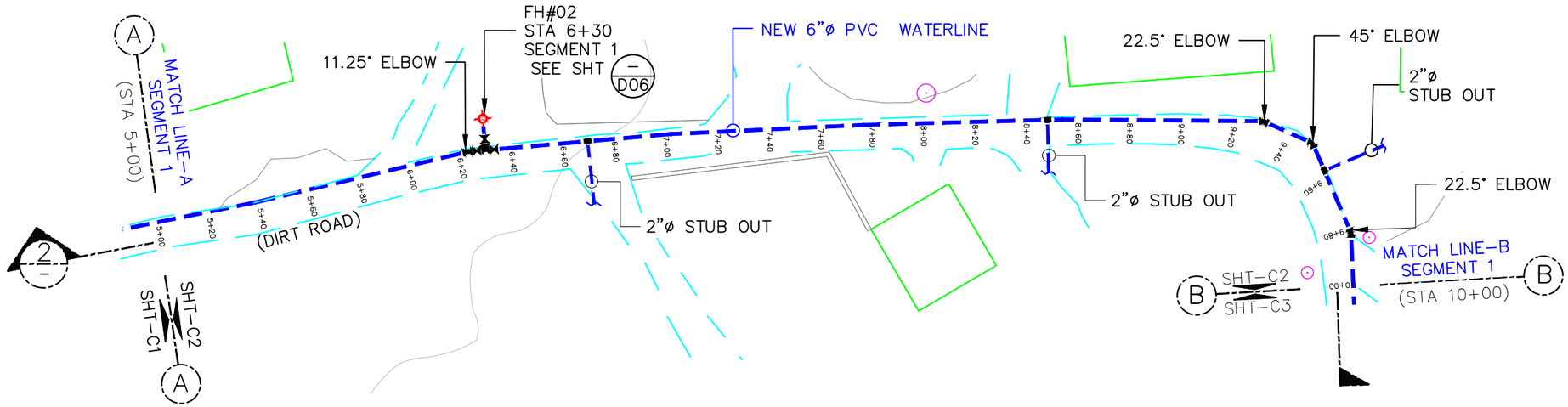

1 LOCATION PLAN
SCALE: AS SHOWN

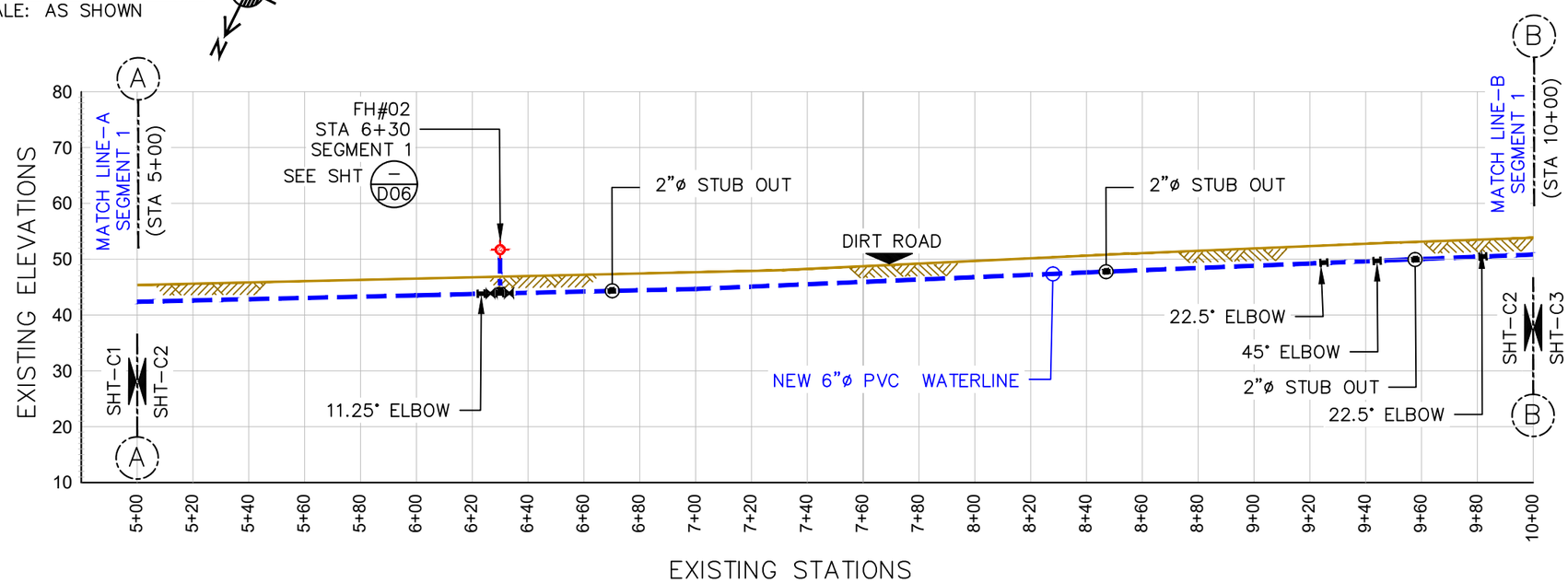

2 PROFILE
SCALE: AS SHOWN

LEGEND:

EXISTING WATER SERVICE:	
EXISTING ACP WATER:	
NEW 6ø" PVC WATER:	
TELEPHONE CONDUIT:	
EXISTING STORM DRAIN:	
EXISTING SEWER MAIN:	
GATE VALVE:	
POWER/TEL POLE:	
AIR RELIEVE VALVE:	
ELBOWS: 11.25° 22.5° 45° 90° BACK TEE	
FIRE HYDRANT:	
BAC-T SAMPLING STN:	
SERVICE METER:	
STUB-OUT:	
PRV / PSV :	
EXISTING SERVICE LINE TRANSFERRED TO NEW LINE:	
TREES:	HEDGES:
ROCK WALL:	WIRE FENCE:

NOTES:
CONSTRUCTION CONTRACTOR SHALL FIELD VERIFY ALL EXISTING UNDERGROUND INFRASTRUCTURE TO ENSURE SAFETY OF ITS WORKERS AND AVOID ANY DAMAGES TO EXISTING GOVERNMENT UTILITIES.

ALL EXISTING FIRE HYDRANT TO BE TRANSFERRED TO NEW LINE.
SEE SHT-D06 FOR FIRE HYDRANT CONNECTION DETAILS.

INSTALL 2"ø×6"ø SADDLE FOR NEW SERVICE CONNECTION @ EVERY 500 FEET

0 50' 100'
SCALE IN FEET
HORIZ. 1": 20'

0 40' 80'
SCALE IN FEET
VERT. 1": 20'

No.	Description	Date

REV. NO.:
REVISION:
CHECKED BY:
APPROVED BY:
DATE:

PREPARED BY: F.Toala
CHECKED BY: L.Tyrell
APPROVED BY: F.Aquila,L.Tyrell
ISSUE FOR: Construction

AMERICAN SAMOA POWER AUTHORITY
ENGINEERING SERVICES DIVISION
P.O.BOX PPB, TAFUNA, PAGO PAGO, AS 96799

PROJECT NAME: VAITOGI ACP WATERLINE REPLACEMENT
DRAWING TITLE: SEGMENT 1
PLAN & PROFILE (STA, 5+00 TO 10+00)
PROJECT LOCATION: VAITOGI VILLAGE, AMERICAN SAMOA

SCALE: AS SHOWN
DATE: SEP-2022
SHEET NO. C02

PROJECT NO:
SIGNATURE:
DATE:

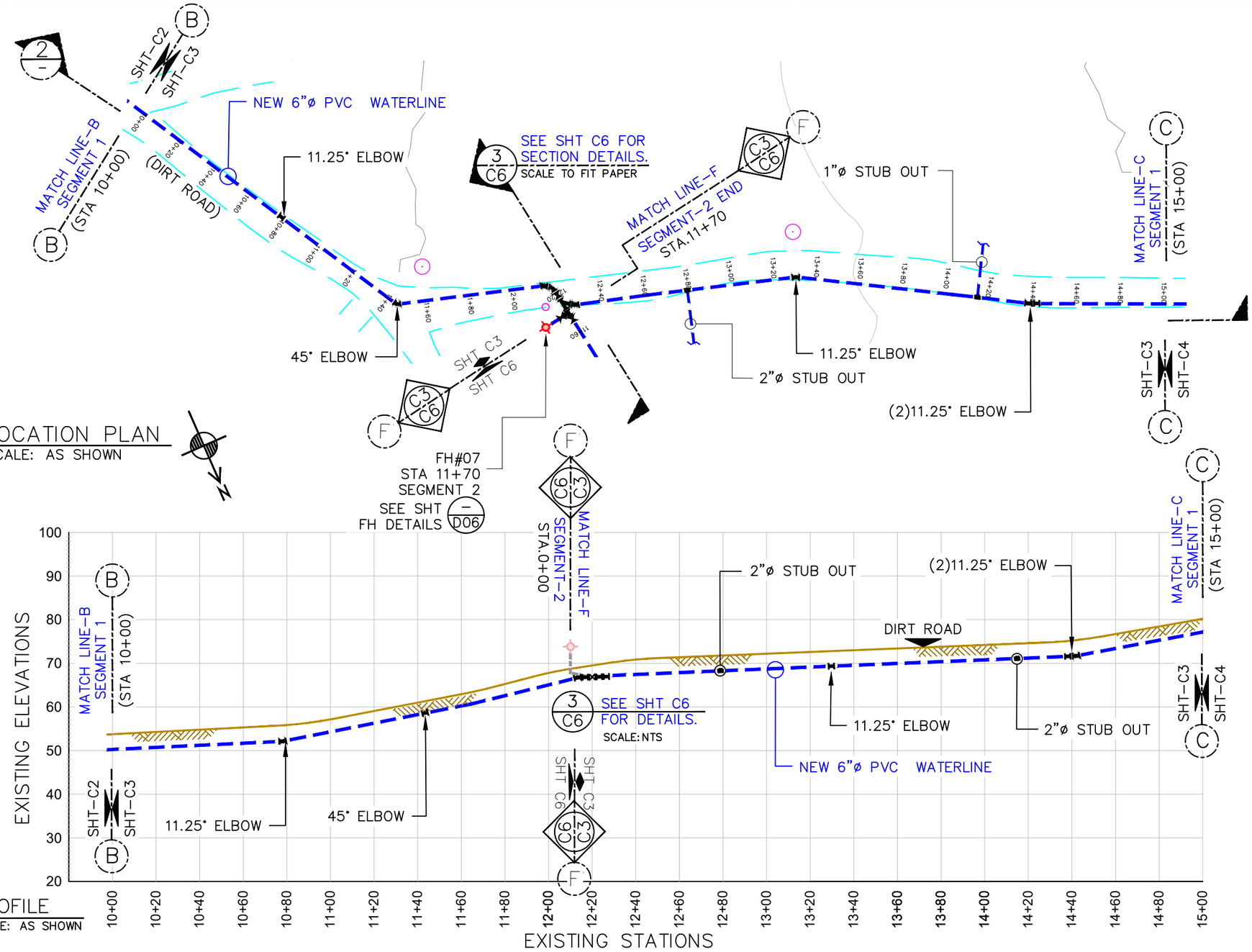

1 LOCATION PLAN
SCALE: AS SHOWN

2 PROFILE
SCALE: AS SHOWN

LEGEND:

EXISTING WATER SERVICE:	
EXISTING ACP WATER:	
NEW 6ø" PVC WATER:	
TELEPHONE CONDUIT:	
EXISTING STORM DRAIN:	
EXISTING SEWER MAIN:	
GATE VALVE:	
POWER/TEL POLE:	
AIR RELIEVE VALVE:	
ELBOWS:	11.25° 22.5° 45° 90° BACK TEE
FIRE HYDRANT:	
BAC-T SAMPLING STN:	
SERVICE METER:	
STUB-OUT:	
PRV / PSV :	
EXISTING SERVICE LINE TRANSFERRED TO NEW LINE:	
TREES:	HEDGES:
ROCK WALL:	WIRE FENCE:

NOTES:
CONSTRUCTION CONTRACTOR SHALL FIELD VERIFY ALL EXISTING UNDERGROUND INFRASTRUCTURE TO ENSURE SAFETY OF ITS WORKERS AND AVOID ANY DAMAGES TO EXISTING GOVERNMENT UTILITIES.

ALL EXISTING FIRE HYDRANT TO BE TRANSFERRED TO NEW LINE.
SEE SHT-D06 FOR FIRE HYDRANT CONNECTION DETAILS.

INSTALL 2"øx6"ø SADDLE FOR NEW SERVICE CONNECTION @ EVERY 500 FEET

0 50' 100'
SCALE IN FEET
HORIZ. 1": 20'

0 40' 80'
SCALE IN FEET
VERT. 1": 20'

No.	Description	Date

REV. NO.:
REVISION:
CHECKED BY:
APPROVED BY:
DATE:

PREPARED BY: F.Toala
CHECKED BY: L.Tyrell
APPROVED BY: F.Aquila,L.Tyrell
ISSUE FOR: Construction

AMERICAN SAMOA POWER AUTHORITY
ENGINEERING SERVICES DIVISION
P.O.BOX PPB, TAFUNA, PAGO PAGO, AS 96799

PROJECT NAME: VAITOGI ACP WATERLINE REPLACEMENT
DRAWING TITLE: SEGMENT 1
PLAN & PROFILE (STA, 10+00 TO 15+00)
PROJECT LOCATION: VAITOGI VILLAGE, AMERICAN SAMOA

SCALE: AS SHOWN
DATE: SEP-2022
SHEET NO. C03

PROJECT NO:
SIGNATURE:
DATE:

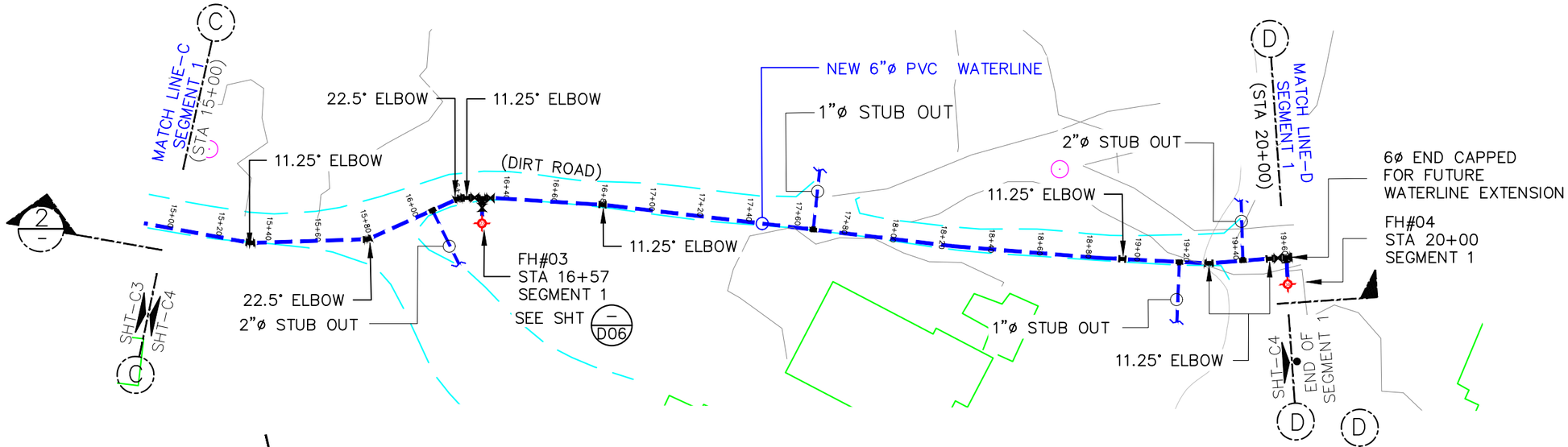

1 LOCATION PLAN
SCALE: AS SHOWN

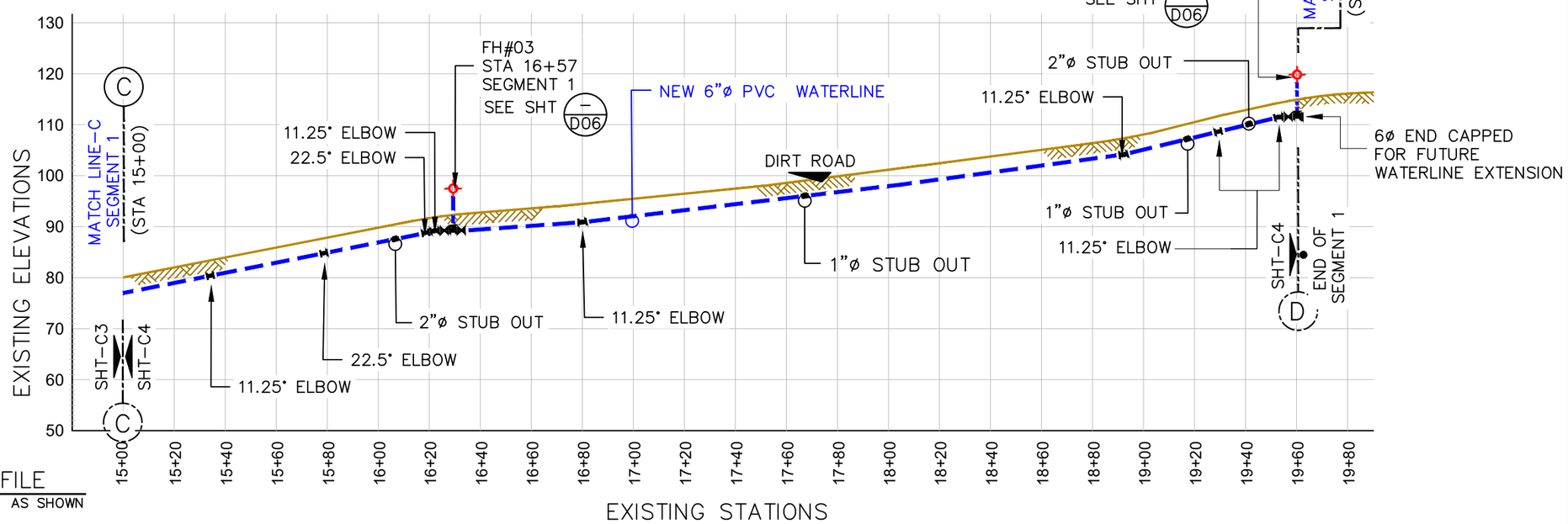

2 PROFILE
SCALE: AS SHOWN

LEGEND:

EXISTING WATER SERVICE:	
EXISTING ACP WATER:	
NEW 6ø" PVC WATER:	
TELEPHONE CONDUIT:	
EXISTING STORM DRAIN:	
EXISTING SEWER MAIN:	
GATE VALVE:	
POWER/TEL POLE:	
AIR RELIEVE VALVE:	
ELBOWS:	11.25° 22.5° 45° 90° BACK TEE
FIRE HYDRANT:	
BAC-T SAMPLING STN:	
SERVICE METER:	
STUB-OUT:	
PRV / PSV :	
EXISTING SERVICE LINE TRANSFERRED TO NEW LINE:	
TREES:	HEDGES:
ROCK WALL:	WIRE FENCE:

NOTES:
CONSTRUCTION CONTRACTOR SHALL FIELD VERIFY ALL EXISTING UNDERGROUND INFRASTRUCTURE TO ENSURE SAFETY OF ITS WORKERS AND AVOID ANY DAMAGES TO EXISTING GOVERNMENT UTILITIES.

ALL EXISTING FIRE HYDRANT TO BE TRANSFERRED TO NEW LINE. SEE SHT-D06 FOR FIRE HYDRANT CONNECTION DETAILS.

INSTALL 2"øx6"ø SADDLE FOR NEW SERVICE CONNECTION @ EVERY 500 FEET

0 50' 100'
SCALE IN FEET
HORIZ. 1": 20'

0 40' 80'
SCALE IN FEET
VERT. 1": 20'

No.	Description	Date

REV. NO.:
REVISION:
CHECKED BY:
APPROVED BY:
DATE:

PREPARED BY: F.Toala
CHECKED BY: L.Tyrell
APPROVED BY: F.Aquila,L.Tyrell
ISSUE FOR: Construction

AMERICAN SAMOA POWER AUTHORITY
ENGINEERING SERVICES DIVISION
P.O.BOX PPB, TAFUNA, PAGO PAGO, AS 96799

PROJECT NAME: VAITOGI ACP WATERLINE REPLACEMENT
DRAWING TITLE: SEGMENT 1
PLAN & PROFILE (STA, 15+00 TO 20+00)
PROJECT LOCATION: VAITOGI VILLAGE, AMERICAN SAMOA

SCALE: AS SHOWN
DATE: SEP-2022
SHEET NO. C04

PROJECT NO:
SIGNATURE:
DATE:

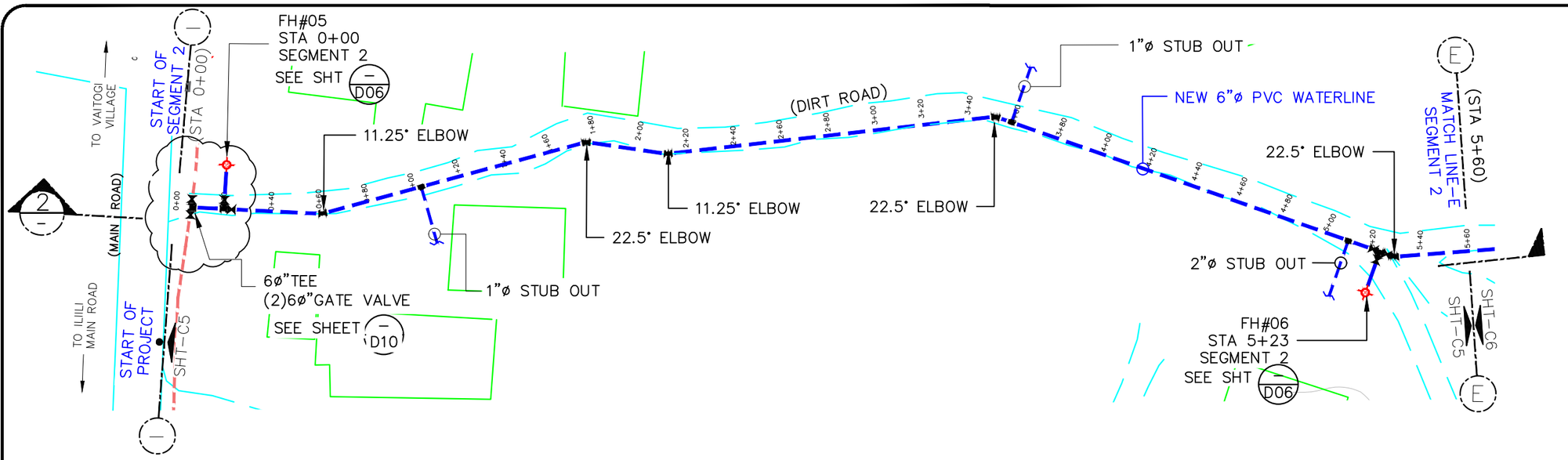

1 LOCATION PLAN
SCALE: AS SHOWN

4 CONNECTION DETAILS
SCALE: NTS

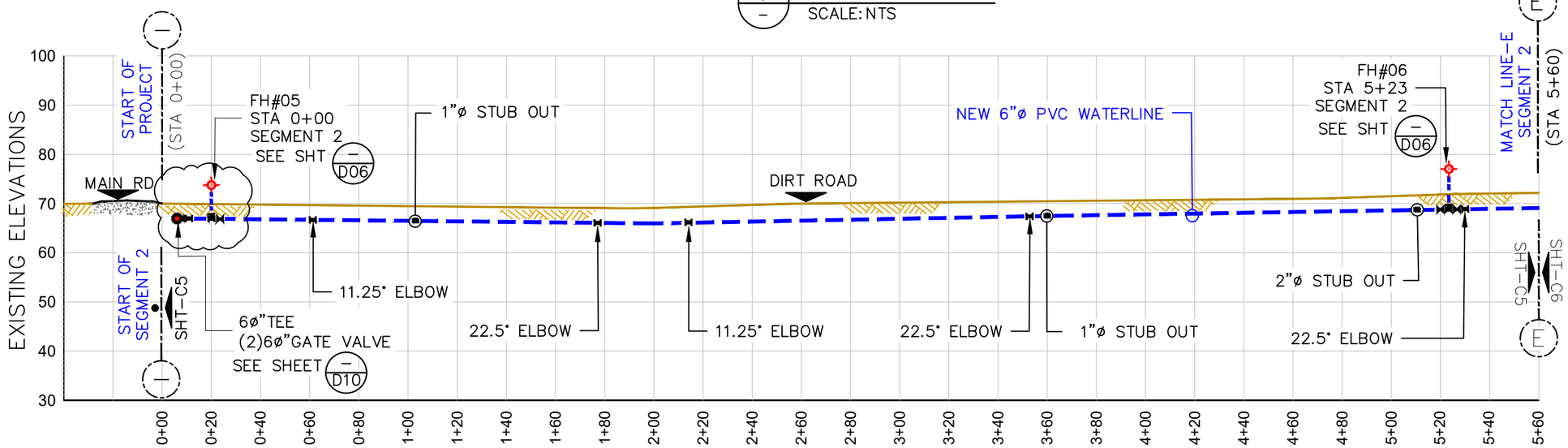

2 PROFILE
SCALE: AS SHOWN

LEGEND:

EXISTING WATER SERVICE:	
EXISTING ACP WATER:	
NEW 6ø" PVC WATER:	
TELEPHONE CONDUIT:	
EXISTING STORM DRAIN:	
EXISTING SEWER MAIN:	
GATE VALVE:	
POWER/TEL POLE:	
AIR RELIEVE VALVE:	
ELBOWS:	11.25° 22.5° 45° 90° BACK TEE
FIRE HYDRANT:	
BAC-T SAMPLING STN:	
SERVICE METER:	
STUB-OUT:	
PRV / PSV :	
EXISTING SERVICE LINE TRANSFERRED TO NEW LINE:	
TREES:	HEDGES:
ROCK WALL:	WIRE FENCE:

NOTES:
CONSTRUCTION CONTRACTOR SHALL FIELD VERIFY ALL EXISTING UNDERGROUND INFRASTRUCTURE TO ENSURE SAFETY OF ITS WORKERS AND AVOID ANY DAMAGES TO EXISTING GOVERNMENT UTILITIES.

ALL EXISTING FIRE HYDRANT TO BE TRANSFERRED TO NEW LINE. SEE SHT-D06 FOR FIRE HYDRANT CONNECTION DETAILS.

INSTALL 2"øx6"ø SADDLE FOR NEW SERVICE CONNECTION @ EVERY 500 FEET

0 50' 100'
SCALE IN FEET
HORIZ. 1": 20'

0 40' 80'
SCALE IN FEET
VERT. 1": 20'

No.	Description	Date

REV. NO.:
REVISION:
CHECKED BY:
APPROVED BY:
DATE:

PREPARED BY: F.Toala
CHECKED BY: L.Tyrell
APPROVED BY: F.Aquila,L.Tyrell
ISSUE FOR: Construction

AMERICAN SAMOA POWER AUTHORITY
ENGINEERING SERVICES DIVISION
P.O.BOX PPB, TAFUNA, PAGO PAGO, AS 96799

PROJECT NAME: VAITOGI ACP WATERLINE REPLACEMENT
DRAWING TITLE: SEGMENT 2 START PLAN & PROFILE (STA, 0+00 TO 5+60)
PROJECT LOCATION: VAITOGI VILLAGE, AMERICAN SAMOA

SCALE: AS SHOWN
DATE: SEP-2022
SHEET NO. C05

PROJECT NO:
SIGNATURE:
DATE:

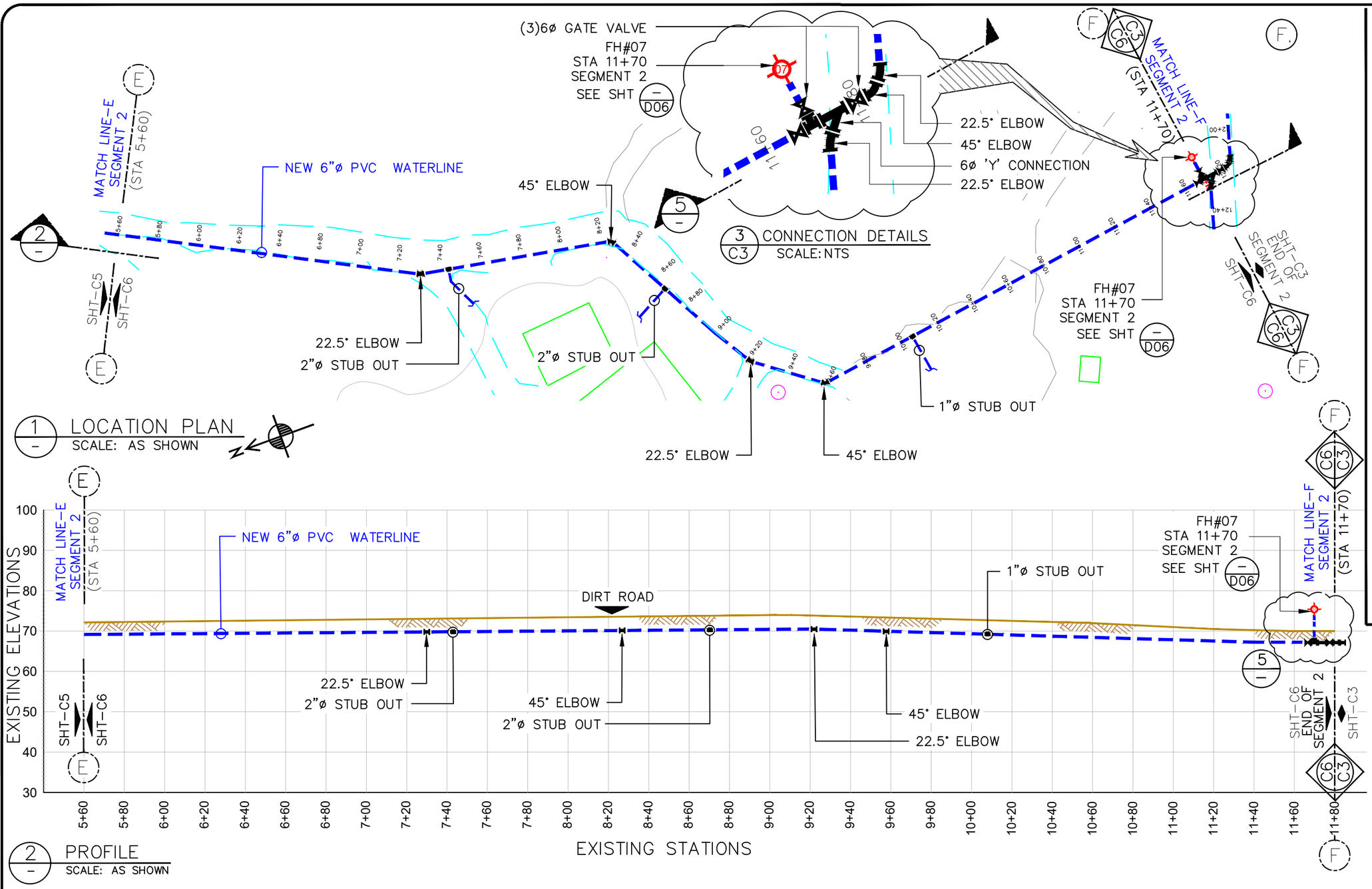

LEGEND:

EXISTING WATER SERVICE:	
EXISTING ACP WATER:	
NEW 6ø" PVC WATER:	
TELEPHONE CONDUIT:	
EXISTING STORM DRAIN:	
EXISTING SEWER MAIN:	
GATE VALVE:	
POWER/TEL POLE:	
AIR RELIEVE VALVE:	
ELBOWS:	11.25° 22.5° 45° 90° BACK TEE
FIRE HYDRANT:	
BAC-T SAMPLING STN:	
SERVICE METER:	
STUB-OUT:	
PRV / PSV :	
EXISTING SERVICE LINE TRANSFERRED TO NEW LINE:	
TREES:	HEDGES:
ROCK WALL:	WIRE FENCE:

NOTES:
CONSTRUCTION CONTRACTOR SHALL FIELD VERIFY ALL EXISTING UNDERGROUND INFRASTRUCTURE TO ENSURE SAFETY OF ITS WORKERS AND AVOID ANY DAMAGES TO EXISTING GOVERNMENT UTILITIES.

ALL EXISTING FIRE HYDRANT TO BE TRANSFERRED TO NEW LINE. SEE SHT-D06 FOR FIRE HYDRANT CONNECTION DETAILS.

INSTALL 2"ø x 6"ø SADDLE FOR NEW SERVICE CONNECTION @ EVERY 500 FEET

0 50' 100'
SCALE IN FEET
HORIZ. 1": 20'

0 40' 80'
SCALE IN FEET
VERT. 1": 20'

No.	Description	Date

REV. NO.:
REVISION:
CHECKED BY:
APPROVED BY:
DATE:

PREPARED BY: F.Toala
CHECKED BY: L.Tyrell
APPROVED BY: F.Aquila,L.Tyrell
ISSUE FOR: Construction

AMERICAN SAMOA POWER AUTHORITY
ENGINEERING SERVICES DIVISION
P.O.BOX PPB, TAFUNA, PAGO PAGO, AS 96799

PROJECT NAME: VAITOGI ACP WATERLINE REPLACEMENT
DRAWING TITLE: SEGMENT 2 END
PLAN & PROFILE (STA, 5+60 TO 11+80)
PROJECT LOCATION: VAITOGI VILLAGE, AMERICAN SAMOA

SCALE: AS SHOWN
DATE: SEP-2022
SHEET NO. C06

PROJECT NO:
SIGNATURE:
DATE:

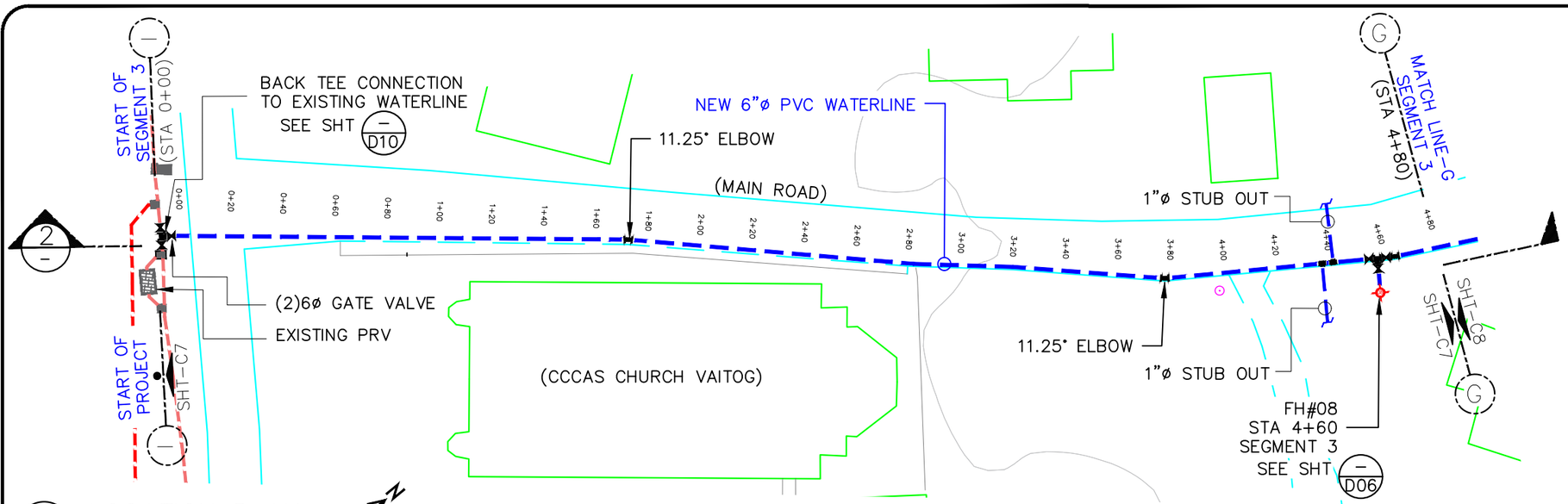

1 LOCATION PLAN
SCALE: AS SHOWN

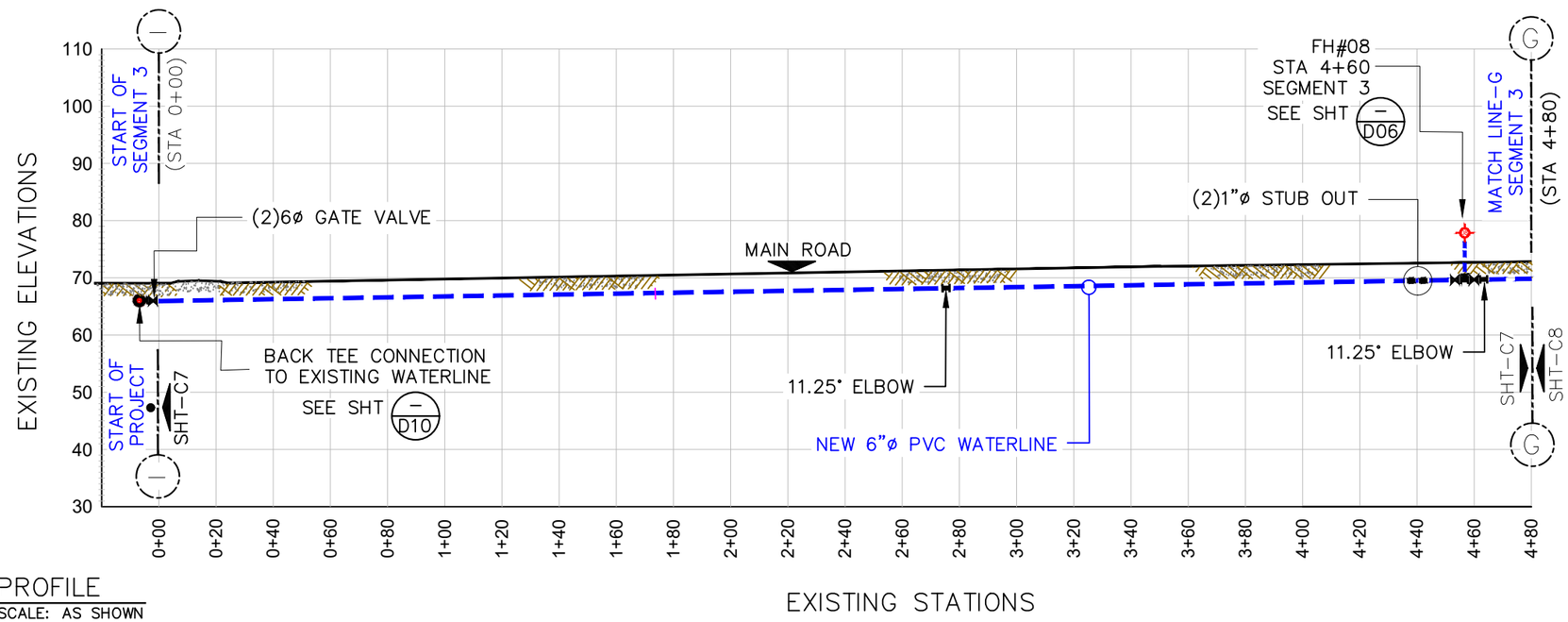

2 PROFILE
SCALE: AS SHOWN

LEGEND:

EXISTING WATER SERVICE:	
EXISTING ACP WATER:	
NEW 6ø" PVC WATER:	
TELEPHONE CONDUIT:	
EXISTING STORM DRAIN:	
EXISTING SEWER MAIN:	
GATE VALVE:	
POWER/TEL POLE:	
AIR RELIEVE VALVE:	
ELBOWS:	11.25° 22.5° 45° 90° BACK TEE
FIRE HYDRANT:	
BAC-T SAMPLING STN:	
SERVICE METER:	
STUB-OUT:	
PRV / PSV :	
EXISTING SERVICE LINE TRANSFERRED TO NEW LINE:	
TREES:	HEDGES:
ROCK WALL:	WIRE FENCE:

NOTES:
CONSTRUCTION CONTRACTOR SHALL FIELD VERIFY ALL EXISTING UNDERGROUND INFRASTRUCTURE TO ENSURE SAFETY OF ITS WORKERS AND AVOID ANY DAMAGES TO EXISTING GOVERNMENT UTILITIES.

ALL EXISTING FIRE HYDRANT TO BE TRANSFERRED TO NEW LINE.
SEE SHT-D06 FOR FIRE HYDRANT CONNECTION DETAILS.

INSTALL 2"øx6"ø SADDLE FOR NEW SERVICE CONNECTION @ EVERY 500 FEET

0 50' 100'
SCALE IN FEET
HORIZ. 1": 20'

0 40' 80'
SCALE IN FEET
VERT. 1": 20'

No.	Description	Date

REV. NO.:
REVISION:
CHECKED BY:
APPROVED BY:
DATE:

PREPARED BY: F.Toala
CHECKED BY: L.Tyrell
APPROVED BY: F.Aquila,L.Tyrell
ISSUE FOR: Construction

AMERICAN SAMOA POWER AUTHORITY
ENGINEERING SERVICES DIVISION
P.O.BOX PPB, TAFUNA, PAGO PAGO, AS 96799

PROJECT NAME: VAITOGI ACP WATERLINE REPLACEMENT
DRAWING TITLE: SEGMENT 3 START PLAN & PROFILE (STA, 0+00 TO 4+80)
PROJECT LOCATION: VAITOGI VILLAGE, AMERICAN SAMOA

SCALE: AS SHOWN
DATE: SEP-2022
SHEET NO. C07

PROJECT NO:
SIGNATURE:
DATE:

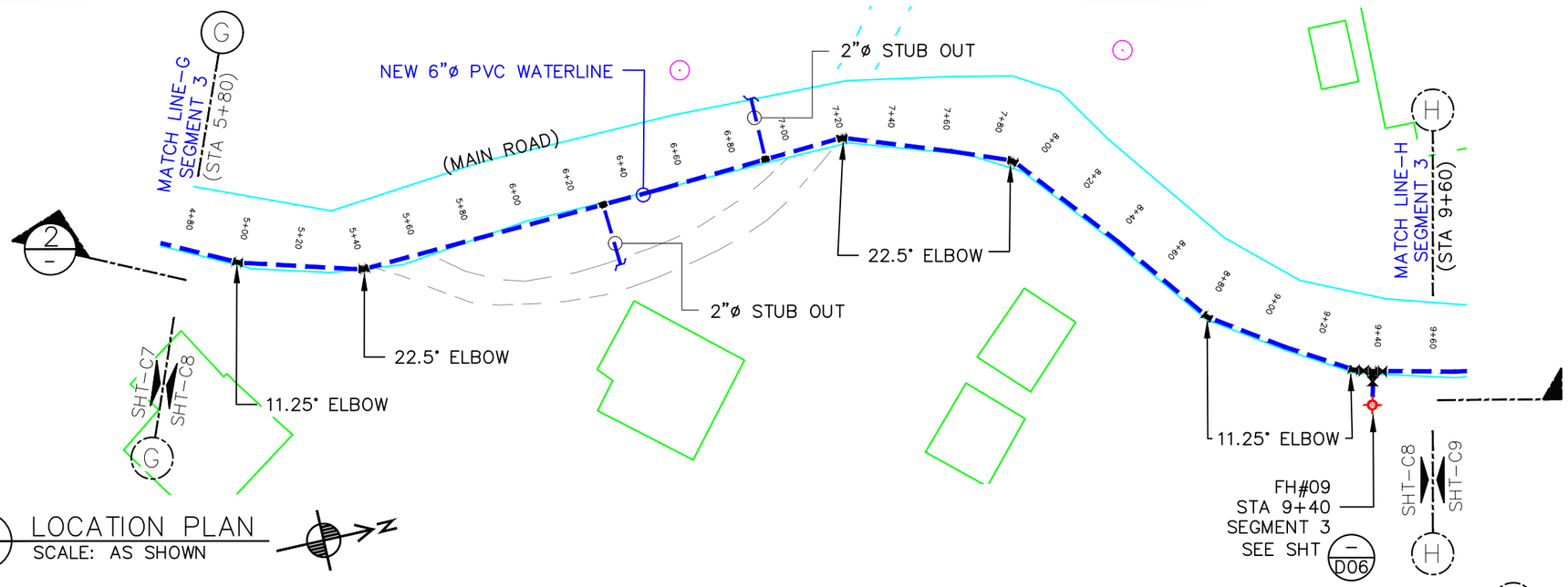

1 LOCATION PLAN
SCALE: AS SHOWN

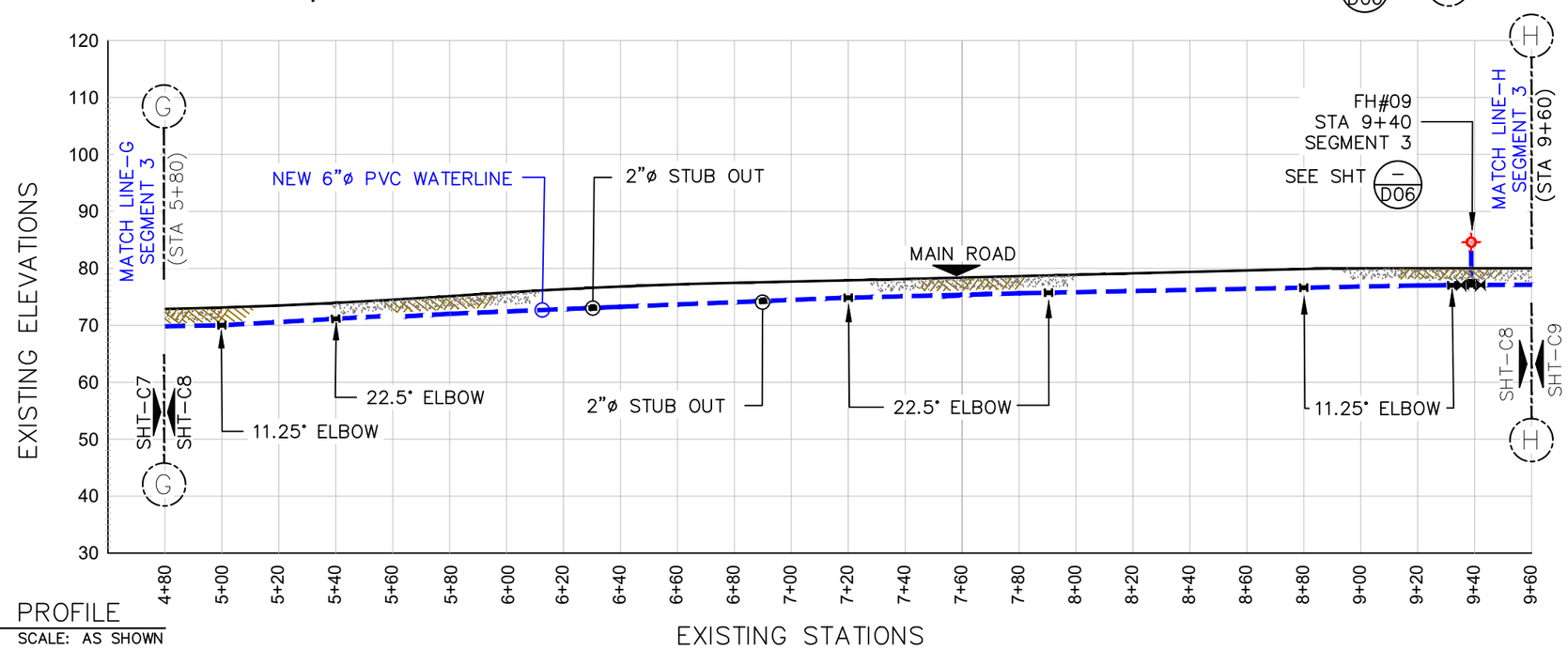

2 PROFILE
SCALE: AS SHOWN

LEGEND:

EXISTING WATER SERVICE:	
EXISTING ACP WATER:	
NEW 6ø" PVC WATER:	
TELEPHONE CONDUIT:	
EXISTING STORM DRAIN:	
EXISTING SEWER MAIN:	
GATE VALVE:	
POWER/TEL POLE:	
AIR RELIEVE VALVE:	
ELBOWS:	11.25° 22.5° 45° 90° BACK TEE
FIRE HYDRANT:	
BAC-T SAMPLING STN:	
SERVICE METER:	
STUB-OUT:	
PRV / PSV :	
EXISTING SERVICE LINE TRANSFERRED TO NEW LINE:	
TREES:	HEDGES:
ROCK WALL:	WIRE FENCE:

NOTES:
CONSTRUCTION CONTRACTOR SHALL FIELD VERIFY ALL EXISTING UNDERGROUND INFRASTRUCTURE TO ENSURE SAFETY OF ITS WORKERS AND AVOID ANY DAMAGES TO EXISTING GOVERNMENT UTILITIES.

ALL EXISTING FIRE HYDRANT TO BE TRANSFERRED TO NEW LINE.
SEE SHT-D06 FOR FIRE HYDRANT CONNECTION DETAILS.

INSTALL 2"øx6"ø SADDLE FOR NEW SERVICE CONNECTION @ EVERY 500 FEET

0 50' 100'
SCALE IN FEET
HORIZ. 1": 20'

0 40' 80'
SCALE IN FEET
VERT. 1": 20'

No.	Description	Date

REV. NO.:
REVISION:
CHECKED BY:
APPROVED BY:
DATE:

PREPARED BY: F.Toala
CHECKED BY: L.Tyrell
APPROVED BY: F.Aquila,L.Tyrell
ISSUE FOR: Construction

AMERICAN SAMOA POWER AUTHORITY
ENGINEERING SERVICES DIVISION
P.O.BOX PPB, TAFUNA, PAGO PAGO, AS 96799

PROJECT NAME: VAITOGI ACP WATERLINE REPLACEMENT
DRAWING TITLE: SEGMENT 3
PLAN & PROFILE (STA, 4+80 TO 9+60)
PROJECT LOCATION: VAITOGI VILLAGE, AMERICAN SAMOA

SCALE: AS SHOWN
DATE: SEP-2022
SHEET NO. C08

PROJECT NO:
SIGNATURE:
DATE:

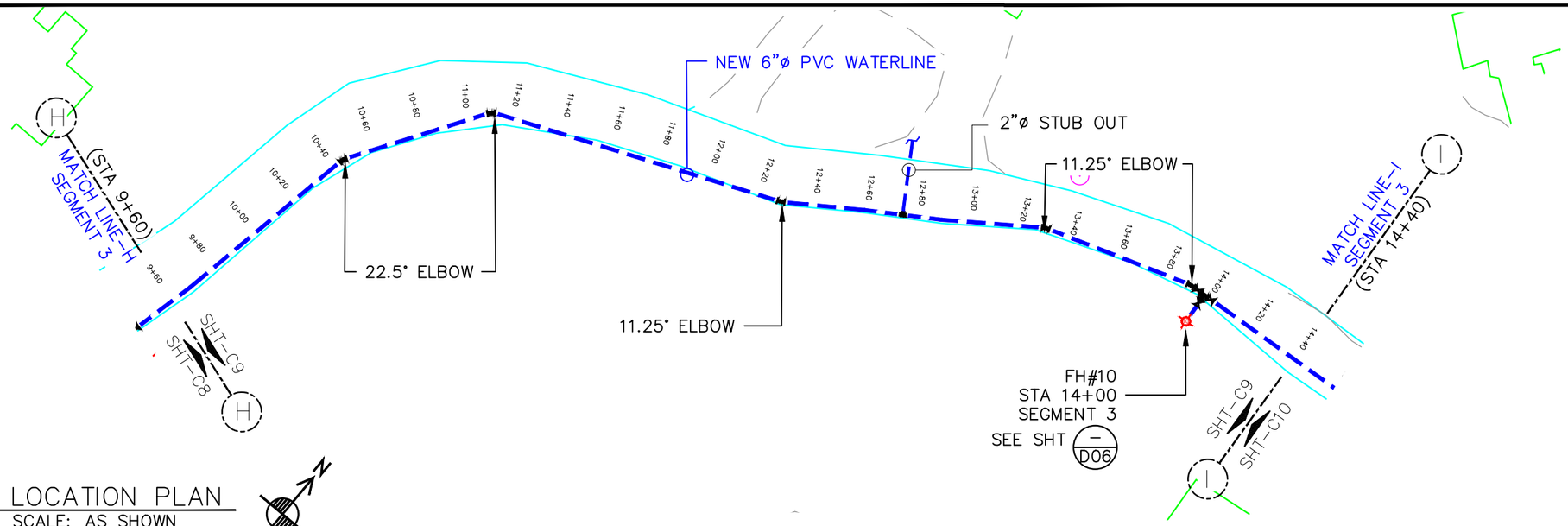

1 LOCATION PLAN
SCALE: AS SHOWN

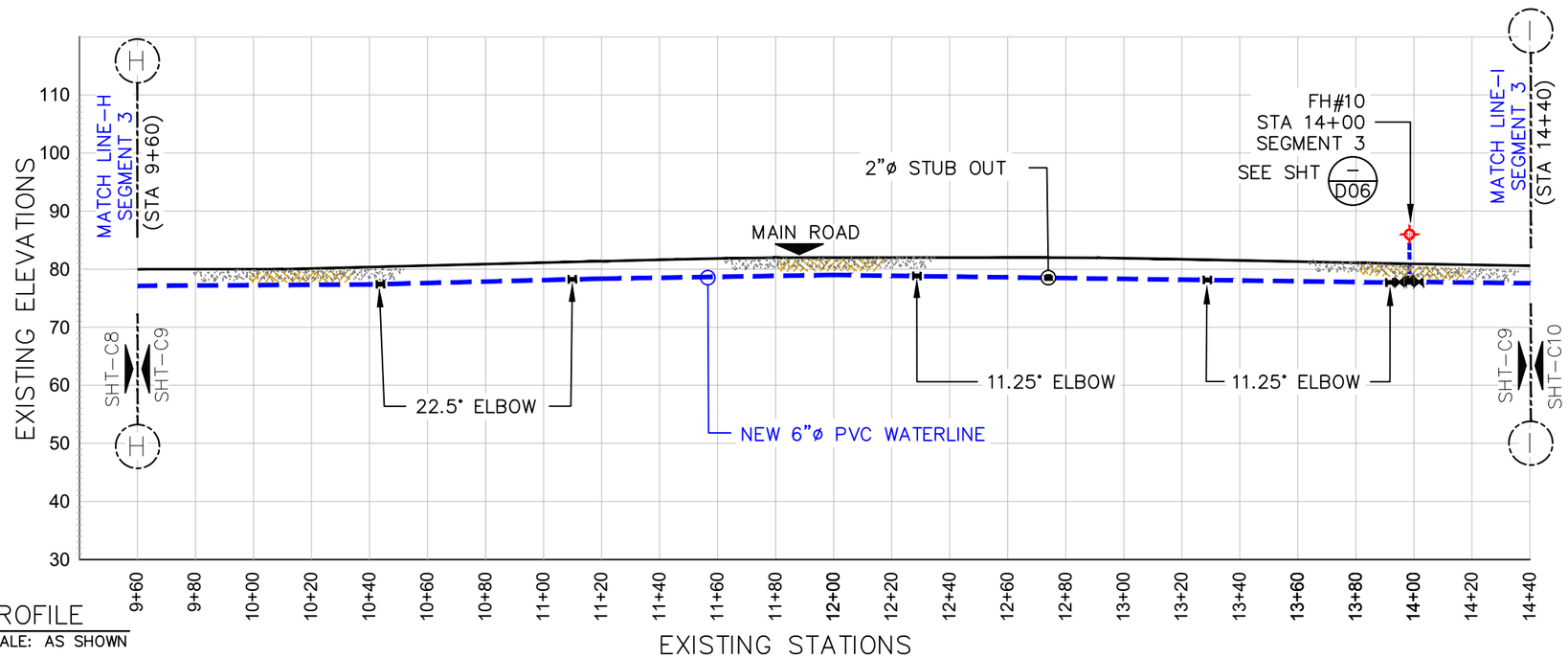

2 PROFILE
SCALE: AS SHOWN

LEGEND:

EXISTING WATER SERVICE:	
EXISTING ACP WATER:	
NEW 6ø" PVC WATER:	
TELEPHONE CONDUIT:	
EXISTING STORM DRAIN:	
EXISTING SEWER MAIN:	
GATE VALVE:	
POWER/TEL POLE:	
AIR RELIEVE VALVE:	
ELBOWS:	11.25° 22.5° 45° 90° BACK TEE
FIRE HYDRANT:	
BAC-T SAMPLING STN:	
SERVICE METER:	
STUB-OUT:	
PRV / PSV :	
EXISTING SERVICE LINE TRANSFERRED TO NEW LINE:	
TREES:	HEDGES:
ROCK WALL:	WIRE FENCE:

NOTES:
CONSTRUCTION CONTRACTOR SHALL FIELD VERIFY ALL EXISTING UNDERGROUND INFRASTRUCTURE TO ENSURE SAFETY OF ITS WORKERS AND AVOID ANY DAMAGES TO EXISTING GOVERNMENT UTILITIES.

ALL EXISTING FIRE HYDRANT TO BE TRANSFERRED TO NEW LINE.
SEE SHT-D06 FOR FIRE HYDRANT CONNECTION DETAILS.

INSTALL 2"øx6"ø SADDLE FOR NEW SERVICE CONNECTION @ EVERY 500 FEET

0 50' 100'
SCALE IN FEET
HORIZ. 1": 20'

0 40' 80'
SCALE IN FEET
VERT. 1": 20'

No.	Description	Date

REV. NO.:	
REVISION:	
CHECKED BY:	
APPROVED BY:	
DATE:	

PREPARED BY:	F.Toala
CHECKED BY:	L.Tyrell
APPROVED BY:	F.Aquila,L.Tyrell
ISSUE FOR:	Construction

AMERICAN SAMOA POWER AUTHORITY
ENGINEERING SERVICES DIVISION
P.O.BOX PPB, TAFUNA, PAGO PAGO, AS 96799

PROJECT NAME: VAITOGI ACP WATERLINE REPLACEMENT	SCALE: AS SHOWN	PROJECT NO:
DRAWING TITLE: SEGMENT 3 PLAN & PROFILE (STA, 9+60 TO 14+40)	DATE: SEP-2022	SIGNATURE:
PROJECT LOCATION: VAITOGI VILLAGE, AMERICAN SAMOA	SHEET NO. C09	DATE:

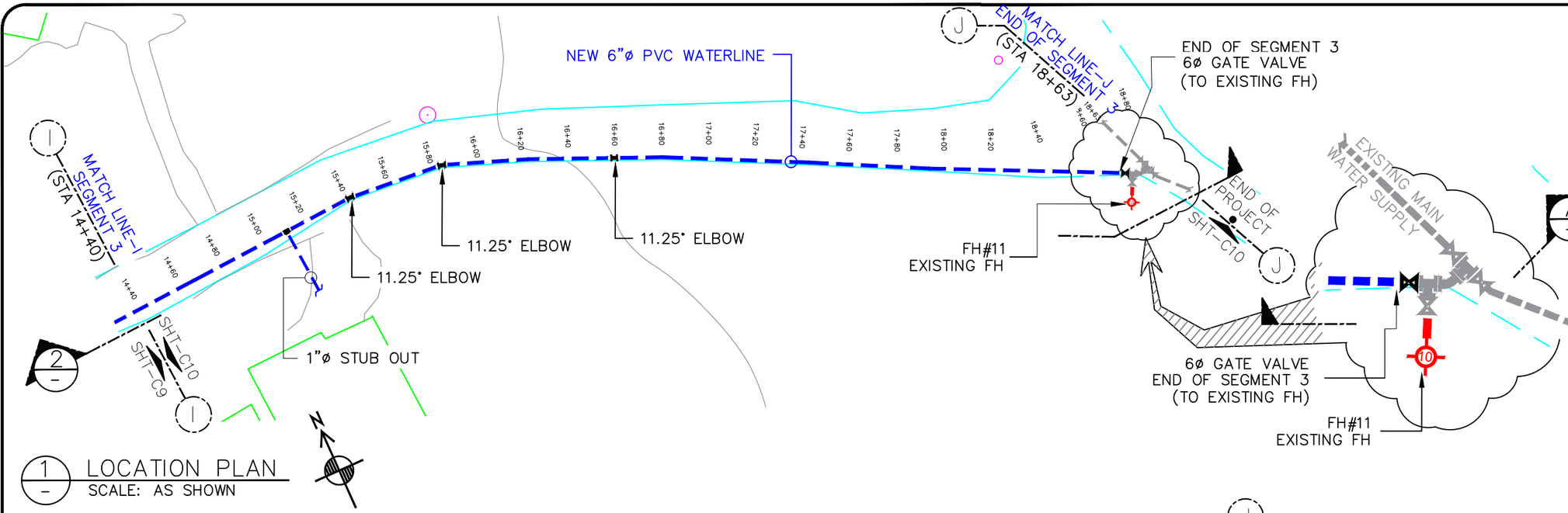

1 LOCATION PLAN
SCALE: AS SHOWN

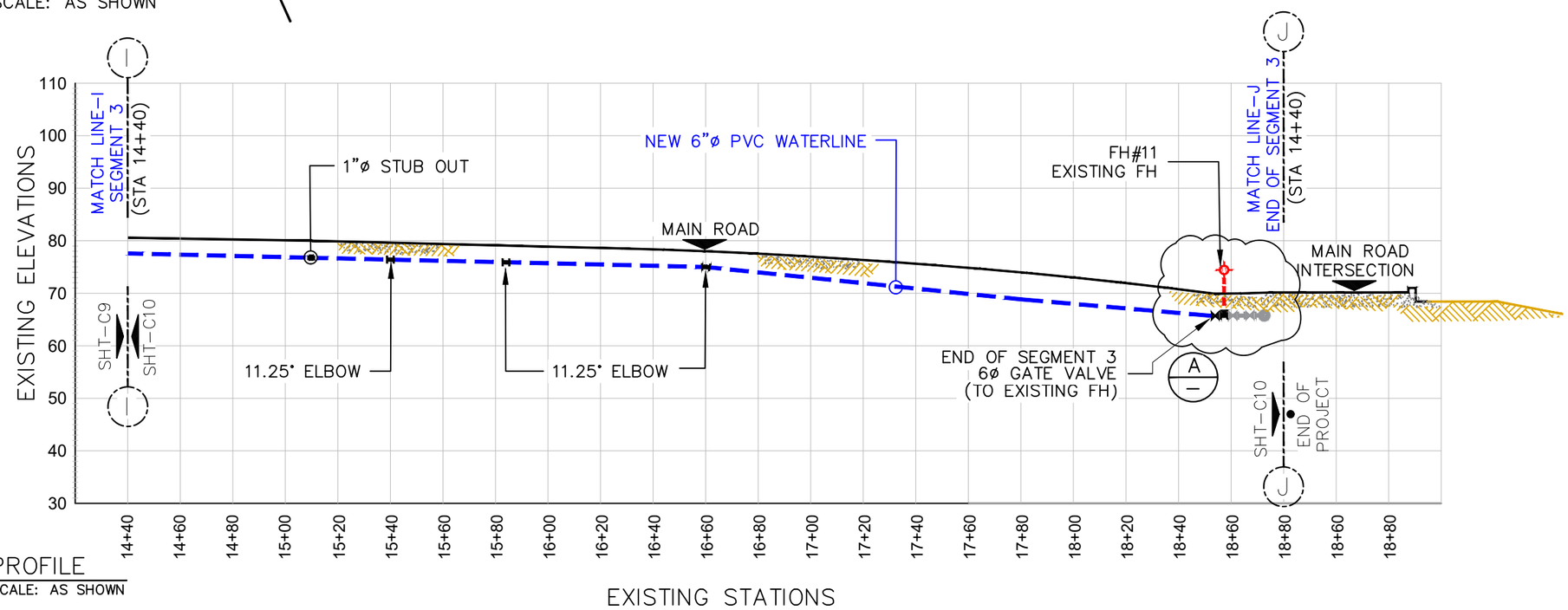

2 PROFILE
SCALE: AS SHOWN

LEGEND:

EXISTING WATER SERVICE:	
EXISTING ACP WATER:	
NEW 6ø" PVC WATER:	
TELEPHONE CONDUIT:	
EXISTING STORM DRAIN:	
EXISTING SEWER MAIN:	
GATE VALVE:	
POWER/TEL POLE:	
AIR RELIEVE VALVE:	
ELBOWS:	11.25° 22.5° 45° 90° BACK TEE
FIRE HYDRANT:	
BAC-T SAMPLING STN:	
SERVICE METER:	
STUB-OUT:	
PRV / PSV :	
EXISTING SERVICE LINE TRANSFERRED TO NEW LINE:	
TREES:	HEDGES:
ROCK WALL:	WIRE FENCE:

NOTES:
CONSTRUCTION CONTRACTOR SHALL FIELD VERIFY ALL EXISTING UNDERGROUND INFRASTRUCTURE TO ENSURE SAFETY OF ITS WORKERS AND AVOID ANY DAMAGES TO EXISTING GOVERNMENT UTILITIES.

ALL EXISTING FIRE HYDRANT TO BE TRANSFERRED TO NEW LINE.
SEE SHT-D06 FOR FIRE HYDRANT CONNECTION DETAILS.

INSTALL 2"øx6"ø SADDLE FOR NEW SERVICE CONNECTION @ EVERY 500 FEET

0 50' 100'
SCALE IN FEET
HORIZ. 1": 20'
0 40' 80'
SCALE IN FEET
VERT. 1": 20'

No.	Description	Date

REV. NO.:
REVISION:
CHECKED BY:
APPROVED BY:
DATE:

PREPARED BY: F.Toala
CHECKED BY: L.Tyrell
APPROVED BY: F.Aquila,L.Tyrell
ISSUE FOR: Construction

AMERICAN SAMOA POWER AUTHORITY
ENGINEERING SERVICES DIVISION
P.O.BOX PPB, TAFUNA, PAGO PAGO, AS 96799

PROJECT NAME: VAITOGI ACP WATERLINE REPLACEMENT
DRAWING TITLE: END OF SEGMENT 3 PLAN & PROFILE (STA, 14+40 TO 19+00)
PROJECT LOCATION: VAITOGI VILLAGE, AMERICAN SAMOA

SCALE: AS SHOWN
DATE: SEP-2022
SHEET NO. C10

PROJECT NO:
SIGNATURE:
DATE:

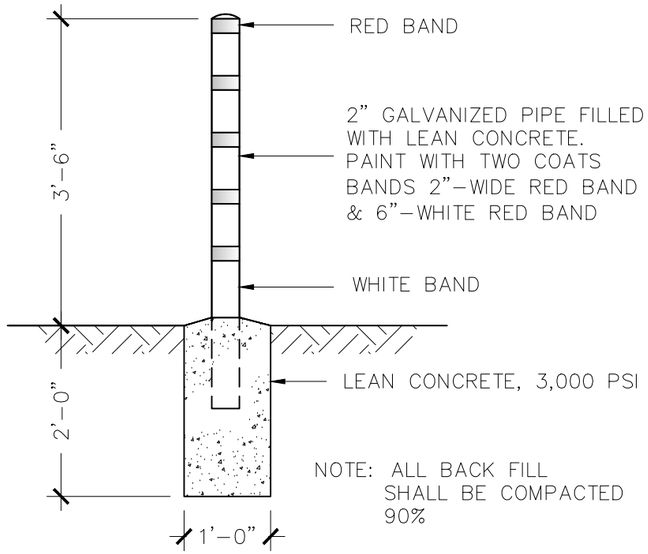

VALVE MARKER DETAIL
SCALE: 1/2" = 1'

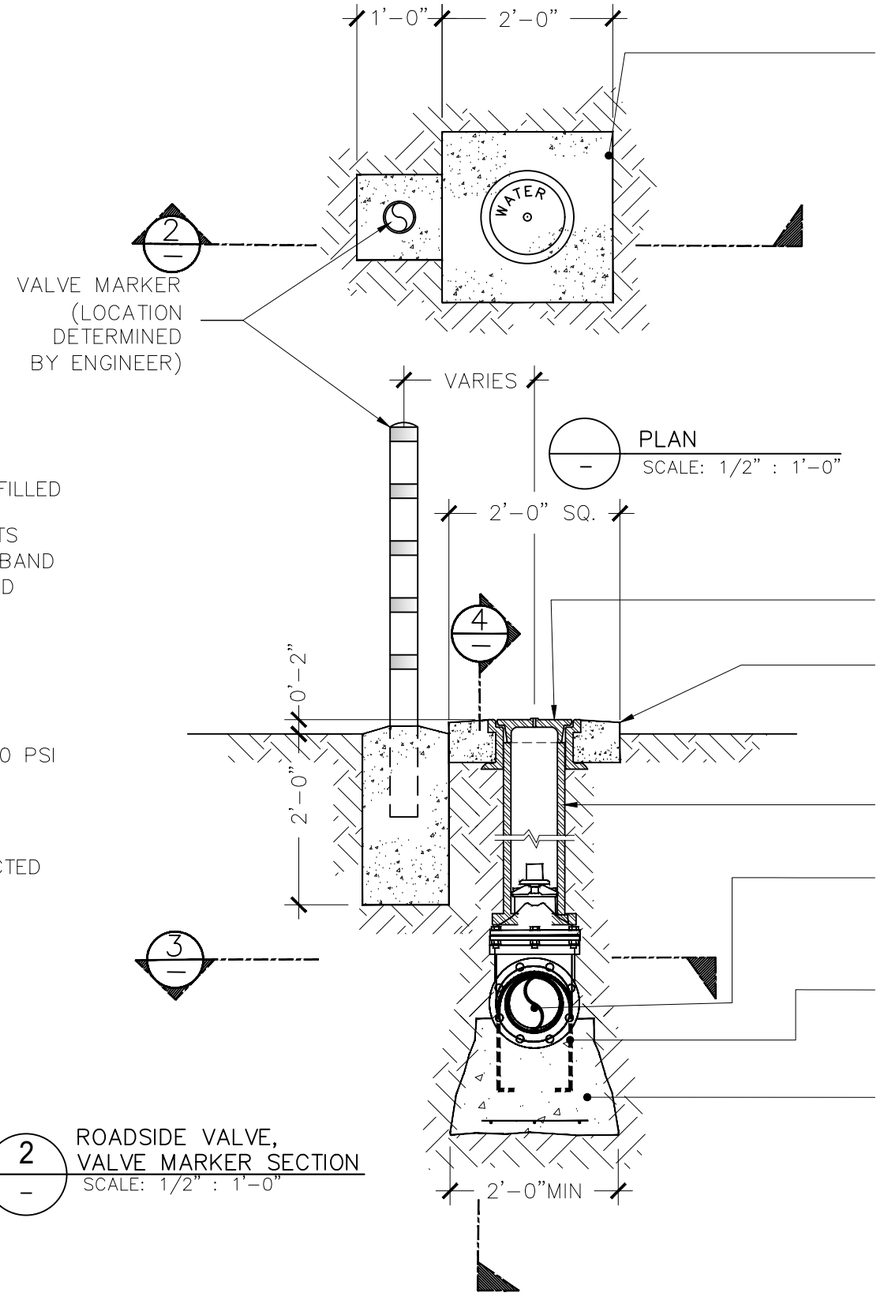

PLAN
SCALE: 1/2" : 1'-0"

ROADSIDE VALVE, VALVE MARKER SECTION
SCALE: 1/2" : 1'-0"

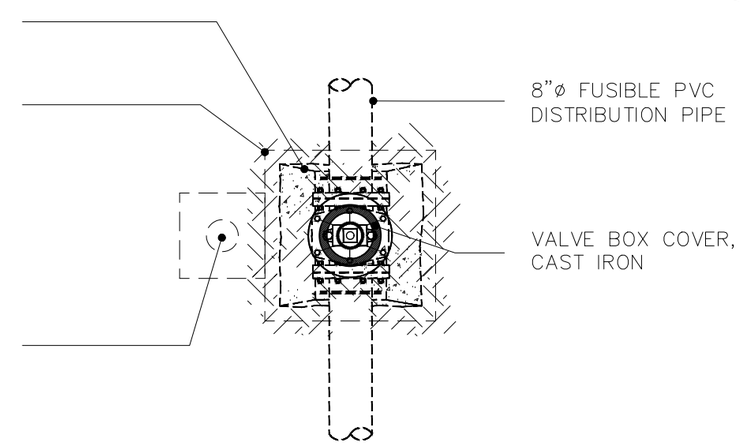

SECTION ON TOP OF VALVE
SCALE: 1/2" : 1'-0"

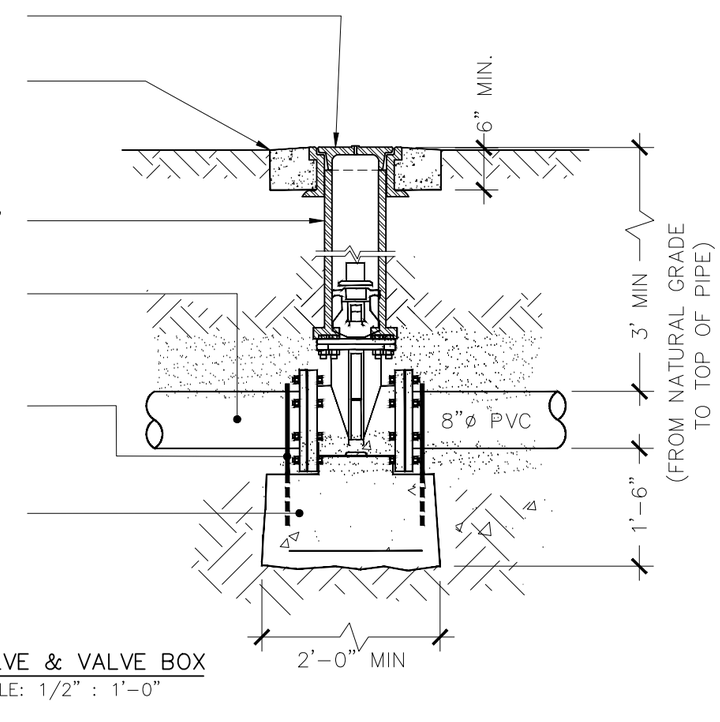

VALVE & VALVE BOX
SCALE: 1/2" : 1'-0"

No.	Description	Date

REV. NO.:
REVISION:
CHECKED BY:
APPROVED BY:
DATE:

PREPARED BY: F.Toala.
CHECKED BY: L,Tyrell
APPROVED BY: F.Aquila
ISSUE FOR: Construction

AMERICAN SAMOA POWER AUTHORITY
ENVIRONMENTAL SERVICES DIVISION
P.O.BOX PPB, TAFUNA, PAGO PAGO, AS 96799

PROJECT NAME: VAITOGI WATERLINE REPLACEMENT PROJECT
DRAWING TITLE: GATE VALVE, GATE VALVE BOX DETAILS.
PROJECT LOCATION: VAITOGI VILLAGE, AMERICAN SAMOA

SCALE: AS SHOWN
PROJECT NO:
DATE: 7-2022
SHEET NO. D01
SIGNATURE:
DATE:

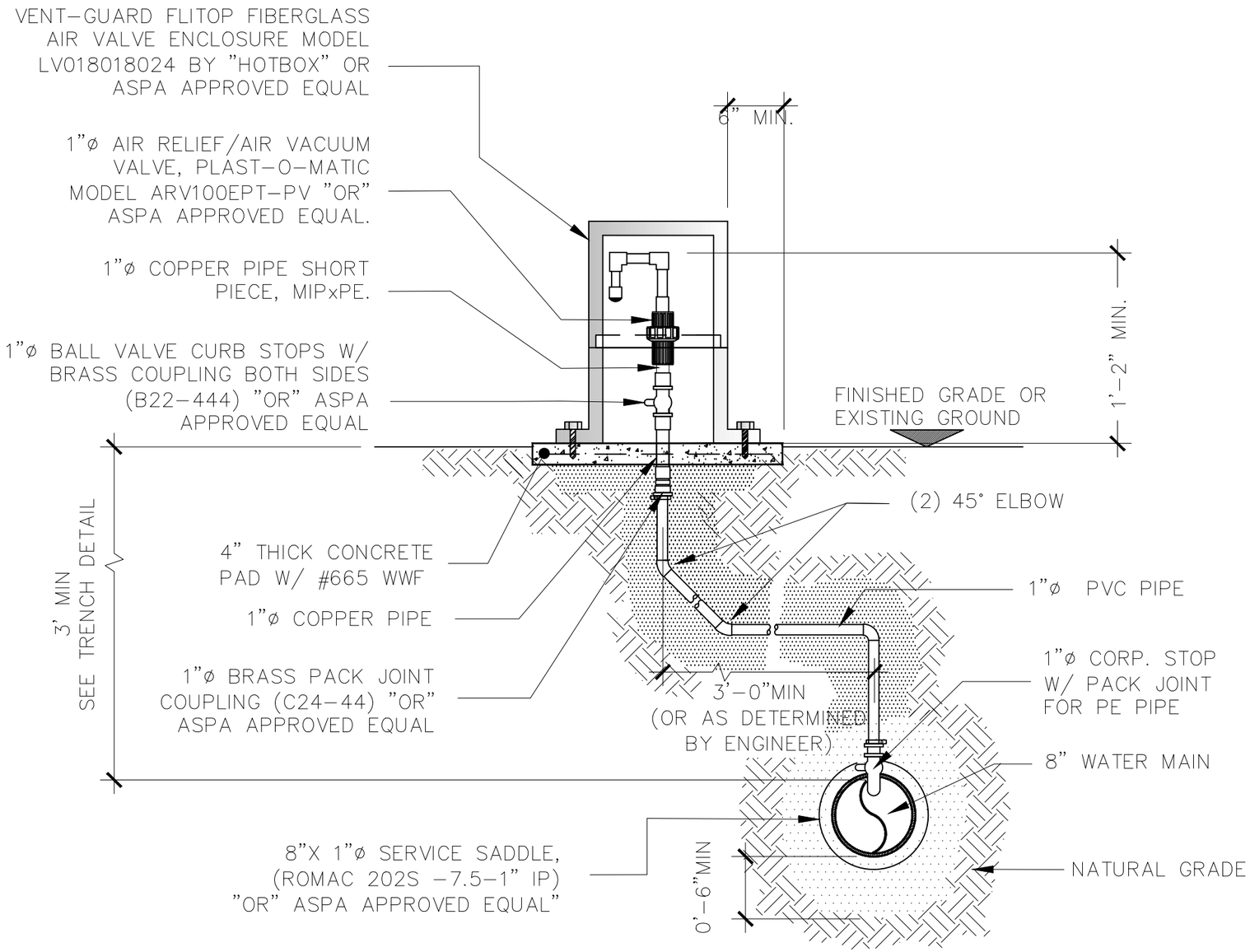

ARV VALVE SECTION DETAILS
SCALE: 3/4" = 1'

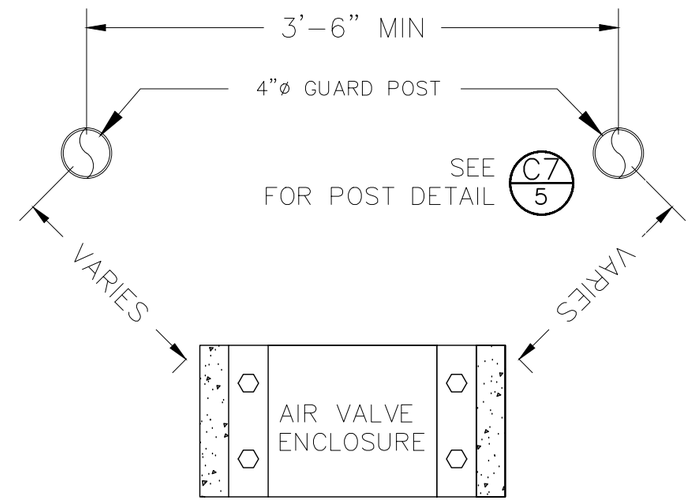

2 PLAN VIEW SHOWING ARV GUARD POST LOCATION
NOT TO SCALE

NOTE:
GUARD POST LOCATION DETERMINED BY ENGINEER

No.	Description	Date

REV. NO.:
REVISION:
CHECKED BY:
APPROVED BY:
DATE:

PREPARED BY: F.Toala.
CHECKED BY: L.Tyrell
APPROVED BY: F.Aquila
ISSUE FOR: Construction

AMERICAN SAMOA POWER AUTHORITY
ENVIRONMENTAL SERVICES DIVISION
P.O.BOX PPB, TAFUNA, PAGO PAGO, AS 96799

PROJECT NAME: VAITOGI WATERLINE REPLACEMENT PROJECT
DRAWING TITLE: AIR RELIEF VALVE & DETAILS
PROJECT LOCATION: VAITOGI VILLAGE, AMERICAN SAMOA

SCALE: AS SHOWN
PROJECT NO:
DATE: 7-2022
SHEET NO. D02
SIGNATURE:
DATE:

GENERAL NOTES:

1. TABLE IS BASED ON 2000#/SQ. FT. SOIL. IF CONDITIONS ARE FOUND TO INDICATE SOIL BEARING IS LESS, THE AREAS SHALL BE INCREASED ACCORDINGLY.
2. AREAS FOR PIPE LARGER THAN 18" SHALL BE CALCULATED.
3. CONCRETE SHALL HAVE A MINIMUM COMPRESSION STRENGTH OF 2500 PSI.
4. THRUST BLOCK IS TO EXTEND TO UNDISTURBED SOIL.
5. SIZE MAY BE DECREASED FOR LESSER DEGREE BENDS AS DETERMINED BY ENGINEER.
6. KEEP CONCRETE CLEAR OF M.J. OR BELL AND SPIGOT JOINTS.
7. BLOCK IN A SIMILAR MANNER AT TEES, HYDRANTS, PLUG OR OTHER LOCATIONS AS REQUIRED.
8. WHEN NECESSARY ADDITIONAL THRUST RESTRAINT METHODS MAY BE USED, SUCH AS MECHANICAL JOINT RESTRAINTS, TIE-RODS (INSTALLED PER MANUFACTURERS' RECOMMENDATIONS) OR OTHER APPROVED METHODS.

CONSTRUCTION KEY NOTES:

A. LENGTH "Y & W" AS REQUIRED TO OBTAIN BEARING AREA AGAINST UNDISTURBED SOIL.

B. ADDITIONAL EXCAVATION IF NECESSARY TO OBTAIN REQUIRED BEARING AREA.

C. MINIMUM THRUST BLOCK AREA REQUIREMENTS FOR (Y & W) AS FOLLOWS:

PIPE SIZE	WATER PIPE	
	TEE, DEAD END 90° BEND	45° AND 22 1/2° BENDS
4" & LESS	3 SQ. FEET	3 SQ. FEET
6"	4 SQ. FEET	3 SQ. FEET
8"	6 SQ. FEET	3 SQ. FEET
10"	9 SQ. FEET	5 SQ. FEET
12"	13 SQ. FEET	7 SQ. FEET
16"	23 SQ. FEET	12 SQ. FEET
18"	29 SQ. FEET	15 SQ. FEET

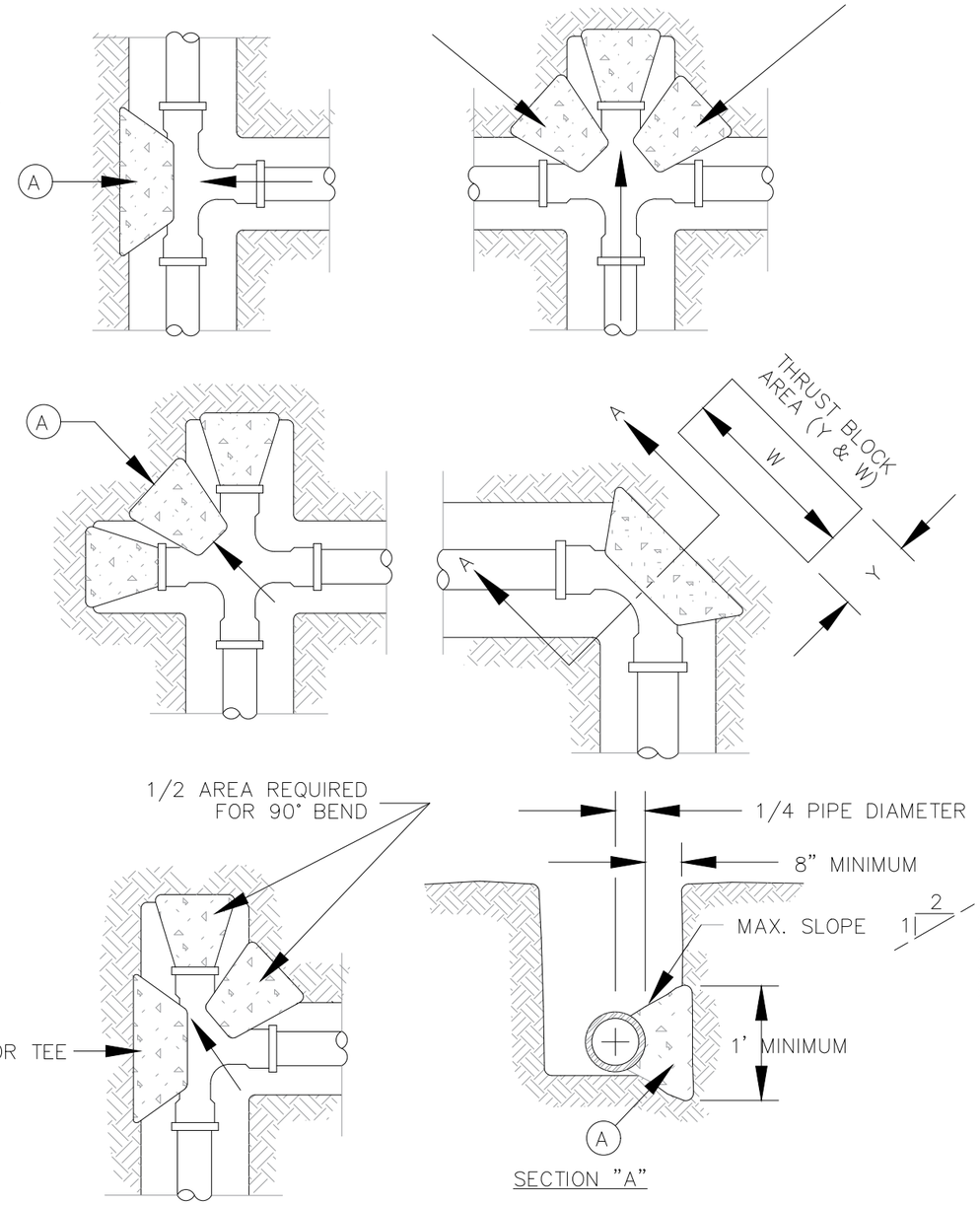

NOTES:

1. ALL ANCHOR RODS ARE TO BE COVERED WITH 80MILS OF BITUMASTIC COMPOUND.
2. WRAP EXTERIOR OF VALVE, ACTUATOR AND REBAR WITH 8 MIL POLYETHYLENE SHEETING AND TAPE.

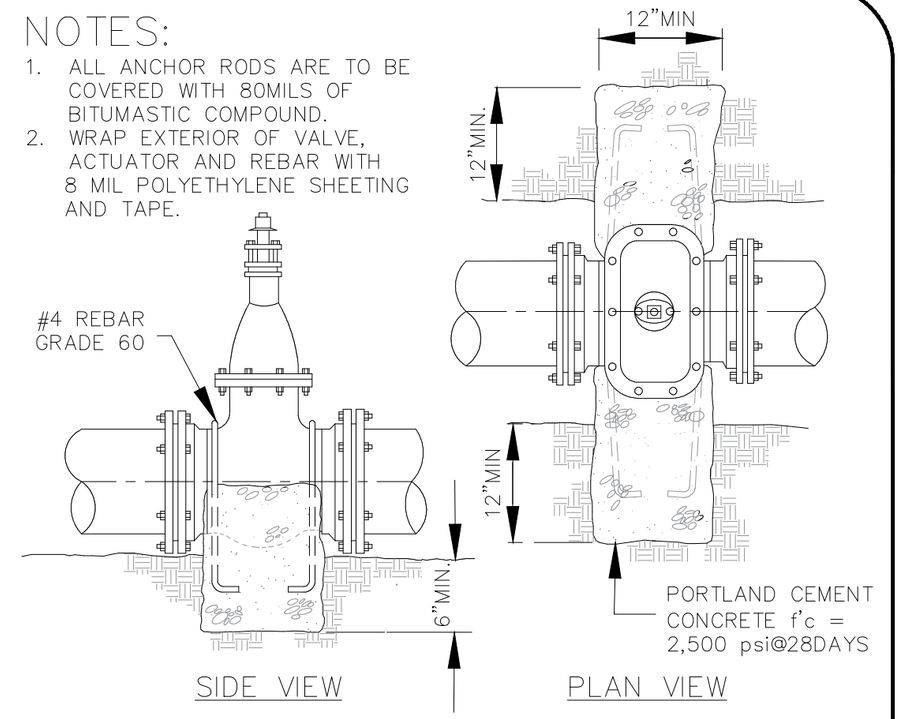

1 TYP. ANCHORING DETAILS

Scale: NTS

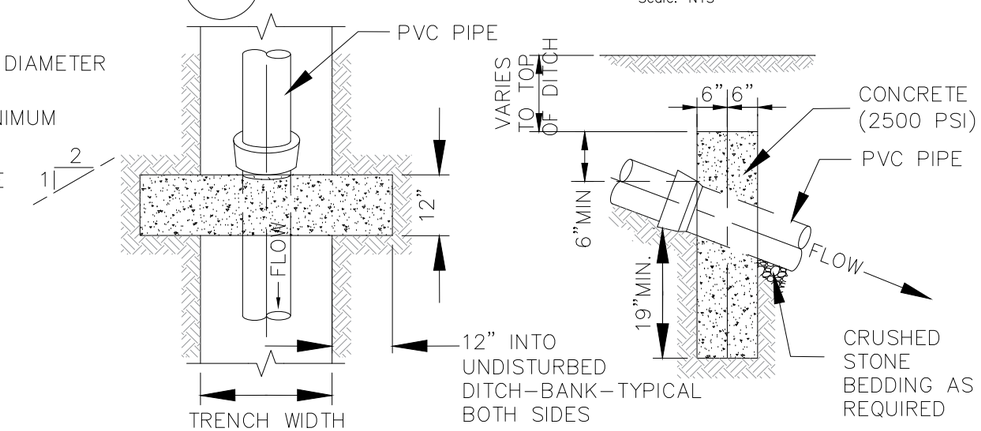

2 ANCHOR ON STEEP SLOPES

Scale: NTS

No.	Description	Date

REV. NO.:

REVISION:

CHECKED BY:

APPROVED BY:

DATE:

PREPARED BY: F.Toala.

CHECKED BY: L.Tyrell

APPROVED BY: F.Aquila

ISSUE FOR: Construction

AMERICAN SAMOA POWER AUTHORITY

ENVIRONMENTAL SERVICES DIVISION

P.O.BOX PPB, TAFUNA, PAGO PAGO, AS 96799

PROJECT NAME: VAITOGI WATERLINE REPLACEMENT PROJECT

DRAWING TITLE: CONCRETE THRUST BLOCKING DETAILS

PROJECT LOCATION: VAITOGI VILLAGE, AMERICAN SAMOA

SCALE: AS SHOWN

PROJECT NO:

DATE: 7-2022

SHEET NO. D03

SIGNATURE:

DATE:

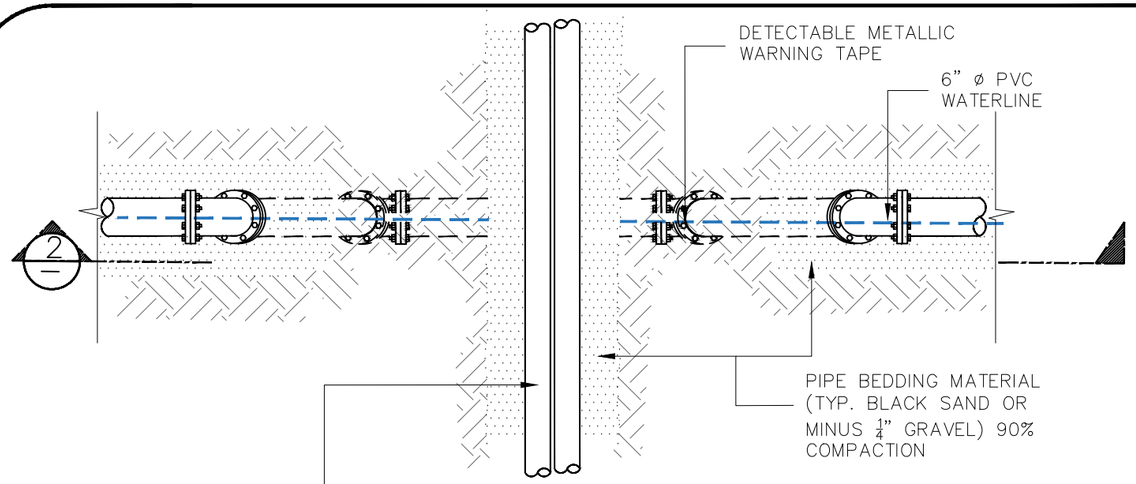

1 PIPE TRENCH PLAN (SECTION ELEVATION)
SCALE: 1/2" = 1'

TRENCH TABLE	
PIPE SIZE	PAYMENT TRENCH
1"	16"
4", 6", 8" OR 10"	24"
12"	30"
16"	34"
20"	38"
24"	42"

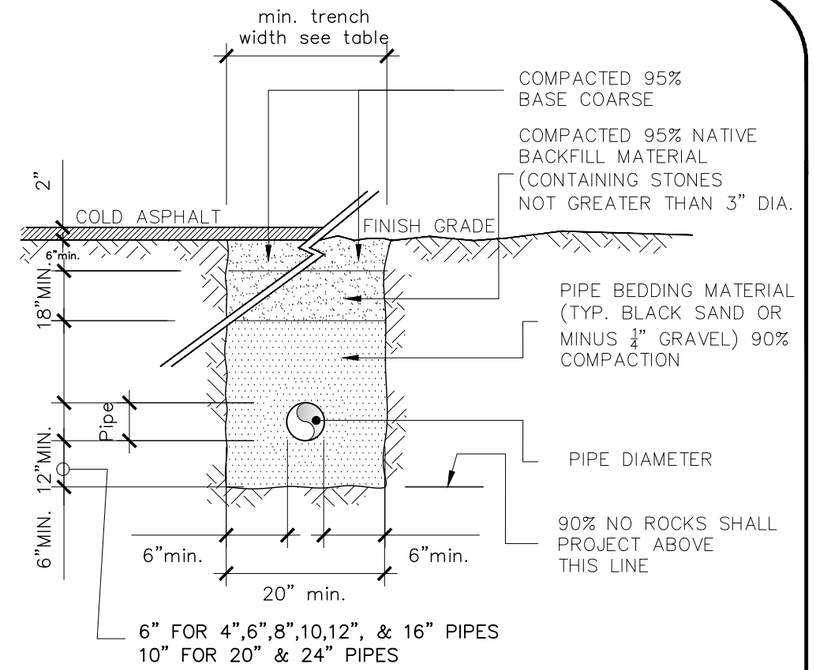

4 TYPICAL TRENCH SECTION
SCALE: 1/2" = 1'

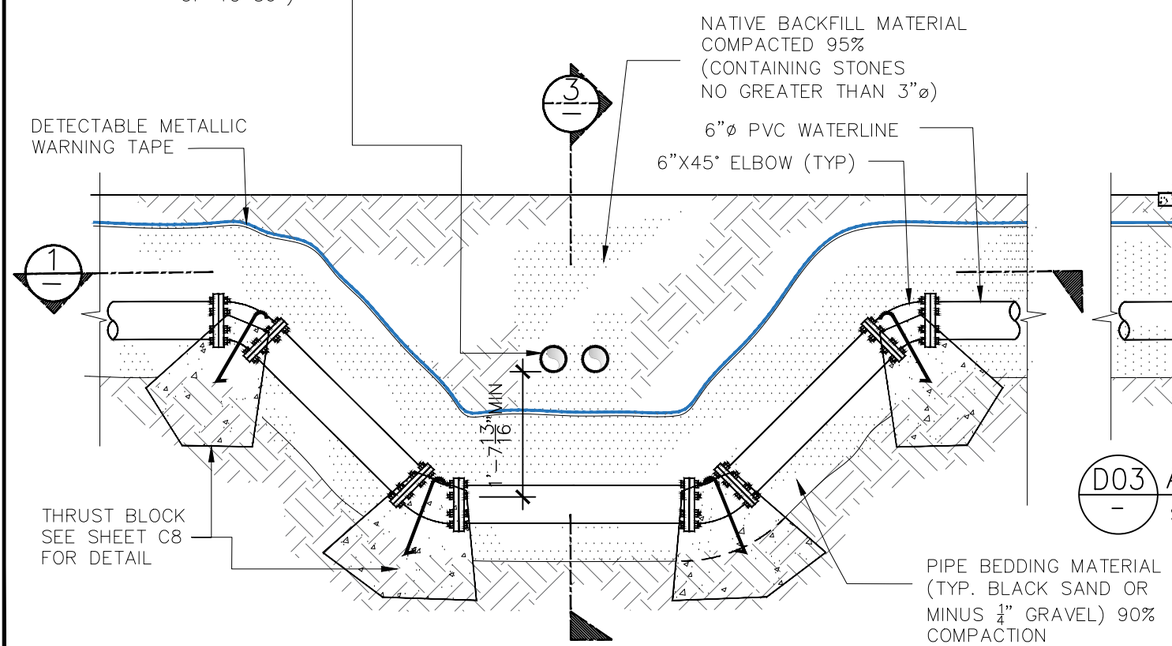

2 TYPICAL UTILITY CROSSING SECTION ELEVATION
SCALE: 1/2" = 1'

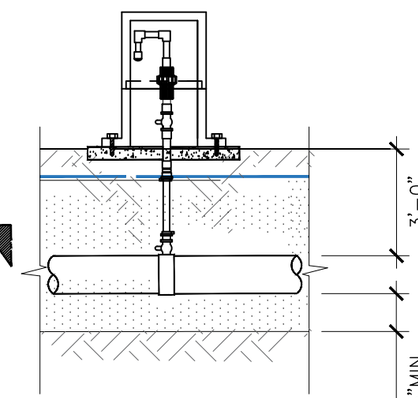

D03 AIR RELIEF VALVE
SCALE: 1/2" = 1'

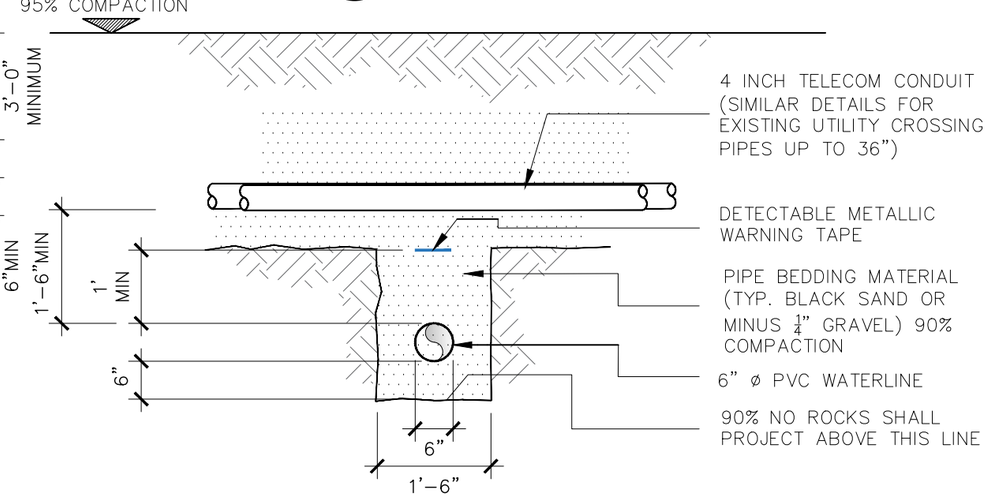

3 TYPICAL UTILITY CROSSING SECTION ELEVATION
SCALE: 1/2" = 1'

No.	Description	Date

REV. NO.:
REVISION:
CHECKED BY:
APPROVED BY:
DATE:

PREPARED BY: F.Toala.
CHECKED BY: L.Tyrell
APPROVED BY: F.Aquila
ISSUE FOR: Construction

AMERICAN SAMOA POWER AUTHORITY
ENVIRONMENTAL SERVICES DIVISION
P.O.BOX PPB, TAFUNA, PAGO PAGO, AS 96799

PROJECT NAME: VAITOGI WATERLINE REPLACEMENT PROJECT
DRAWING TITLE: UTILITY CROSSING & TRENCH DETAILS
PROJECT LOCATION: VAITOGI VILLAGE, AMERICAN SAMOA

SCALE: AS SHOWN
PROJECT NO:
DATE: 7-2022
SHEET NO. D04
SIGNATURE:
DATE:

1 - PLAN
NOT TO SCALE

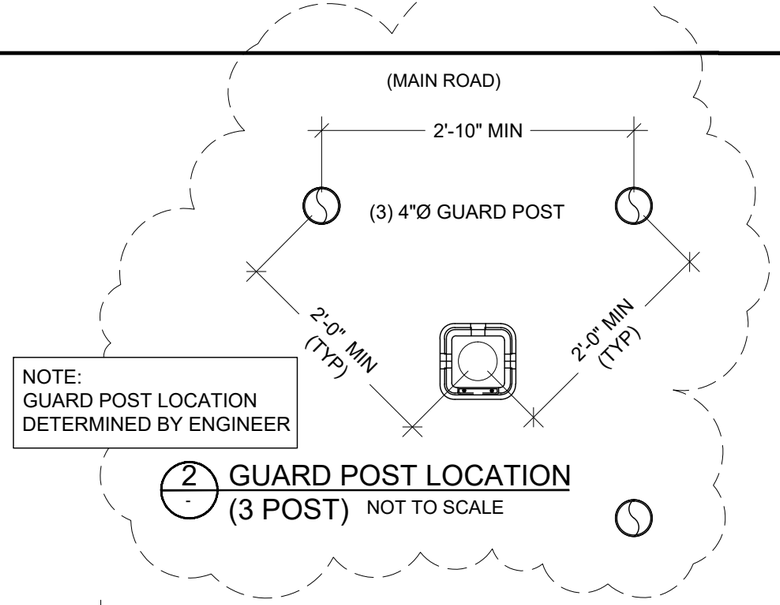

NOTE:
GUARD POST LOCATION
DETERMINED BY ENGINEER

2 - GUARD POST LOCATION (3 POST)
NOT TO SCALE

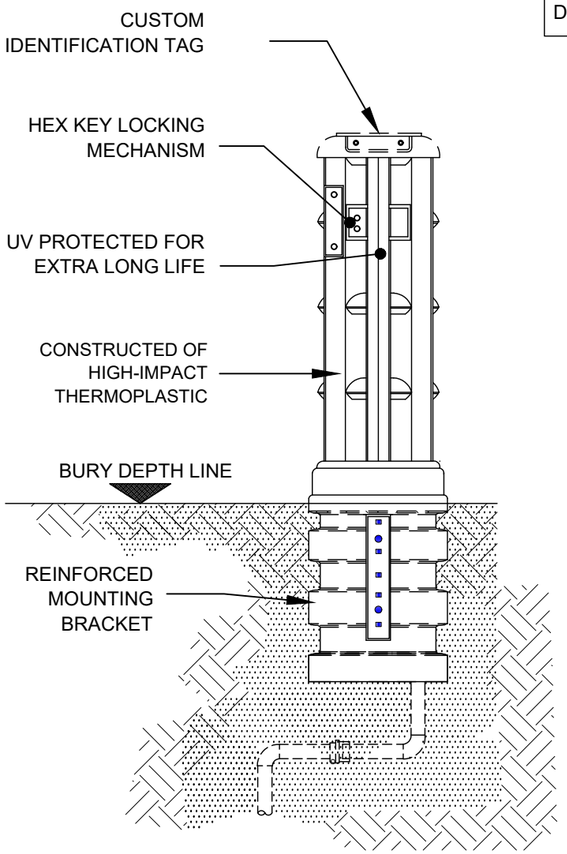

1a - SAFETY GUARD BACTERIOLOGICAL SAMPLING STATION ELEVATION
NOT TO SCALE (SEE SUPPLEMENTAL SPECIFICATION)

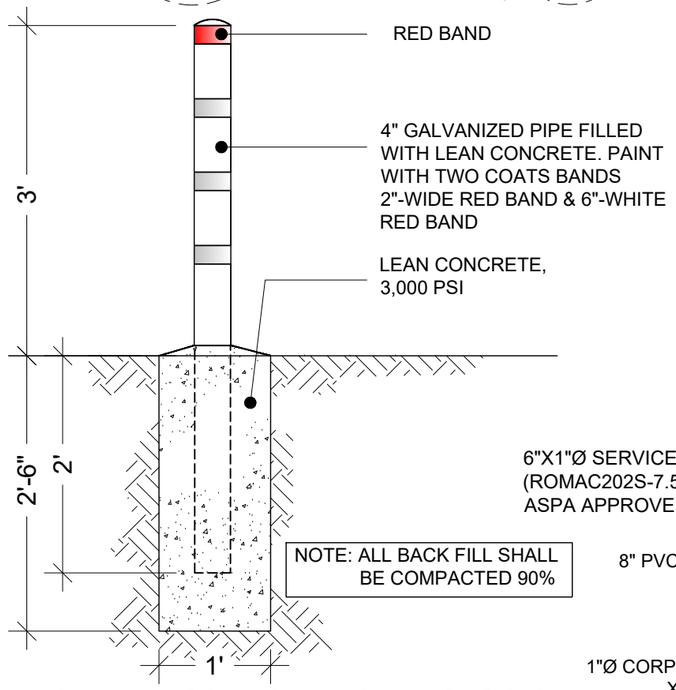

NOTE: ALL BACK FILL SHALL BE COMPACTED 90%

2a - GUARD POST FOR BACTERIOLOGICAL SAMPLING STATION, (2 FEET IN FRONT)
NOT TO SCALE (SEE GUARD POST LOCATION ON MAP ABOVE)

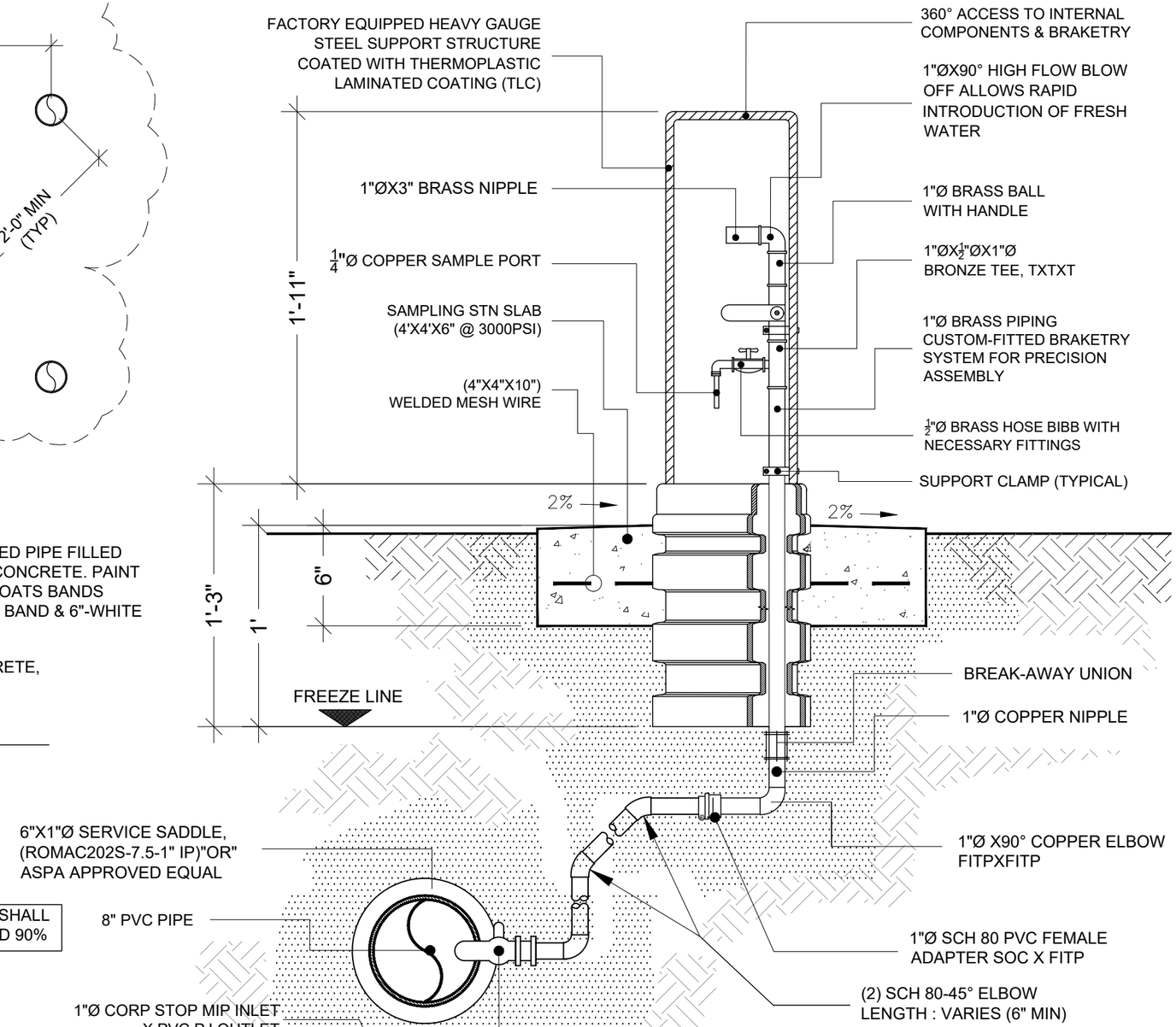

3 - BACTERIOLOGICAL SAMPLING STATION, PIPING, SECTION & DETAILS
NOT TO SCALE (SEE SUPPLEMENTAL SPECIFICATION)

No.	Description	Date

REV. NO.:
REVISION:
CHECKED BY:
APPROVED BY:
DATE:

PREPARED BY: F.Toala.
CHECKED BY: L,Tyrell
APPROVED BY: F.Aquila
ISSUE FOR: Construction

AMERICAN SAMOA POWER AUTHORITY
ENVIRONMENTAL SERVICES DIVISION
P.O.BOX PPB, TAFUNA, PAGO PAGO, AS 96799

PROJECT NAME: VAITOGI WATERLINE REPLACEMENT PROJECT
DRAWING TITLE: BACTERIOLOGICAL SAMPLING STATION & DETAILS
PROJECT LOCATION: VAITOGI VILLAGE, AMERICAN SAMOA

SCALE: NTS
PROJECT NO:
DATE: 7-2022
SHEET NO. D05
SIGNATURE:
DATE:

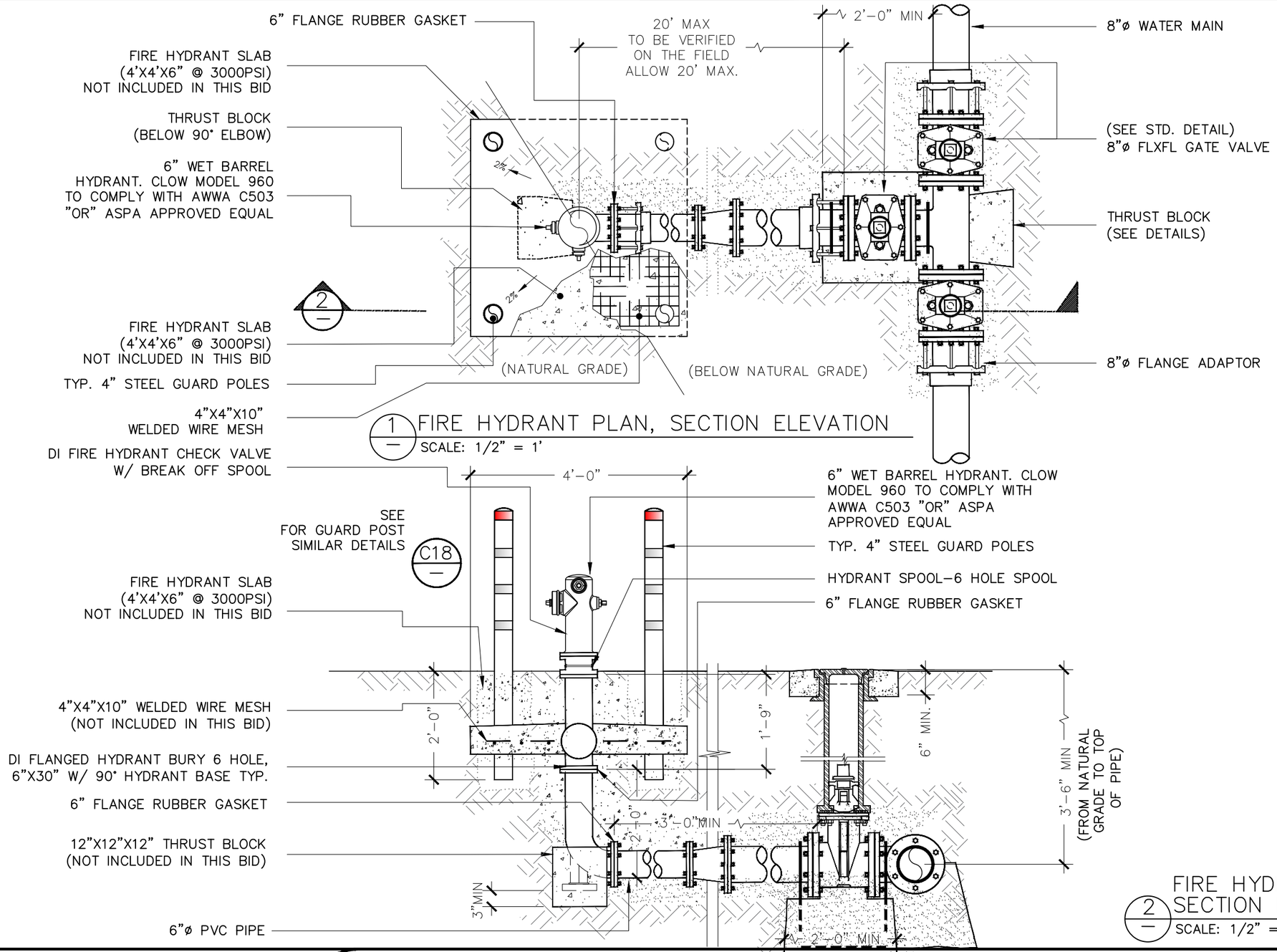

NOTE:
GUARD POST LOCATION DETERMINED BY ENGINEER

No.	Description	Date

REV. NO.:	
REVISION:	
CHECKED BY:	
APPROVED BY:	
DATE:	

PREPARED BY:	F.Toala.
CHECKED BY:	L.Tyrell
APPROVED BY:	F.Aquila
ISSUE FOR:	Construction

AMERICAN SAMOA POWER AUTHORITY
ENVIRONMENTAL SERVICES DIVISION
P.O.BOX PPB, TAFUNA, PAGO PAGO, AS 96799

PROJECT NAME: VAITOGI WATERLINE REPLACEMENT PROJECT

DRAWING TITLE: FIRE HYDRANT PIPING & DETAILS

PROJECT LOCATION: VAITOGI VILLAGE, AMERICAN SAMOA

SCALE: AS SHOWN

PROJECT NO:

DATE: 3-2022

SHEET NO. D06

SIGNATURE:

DATE:

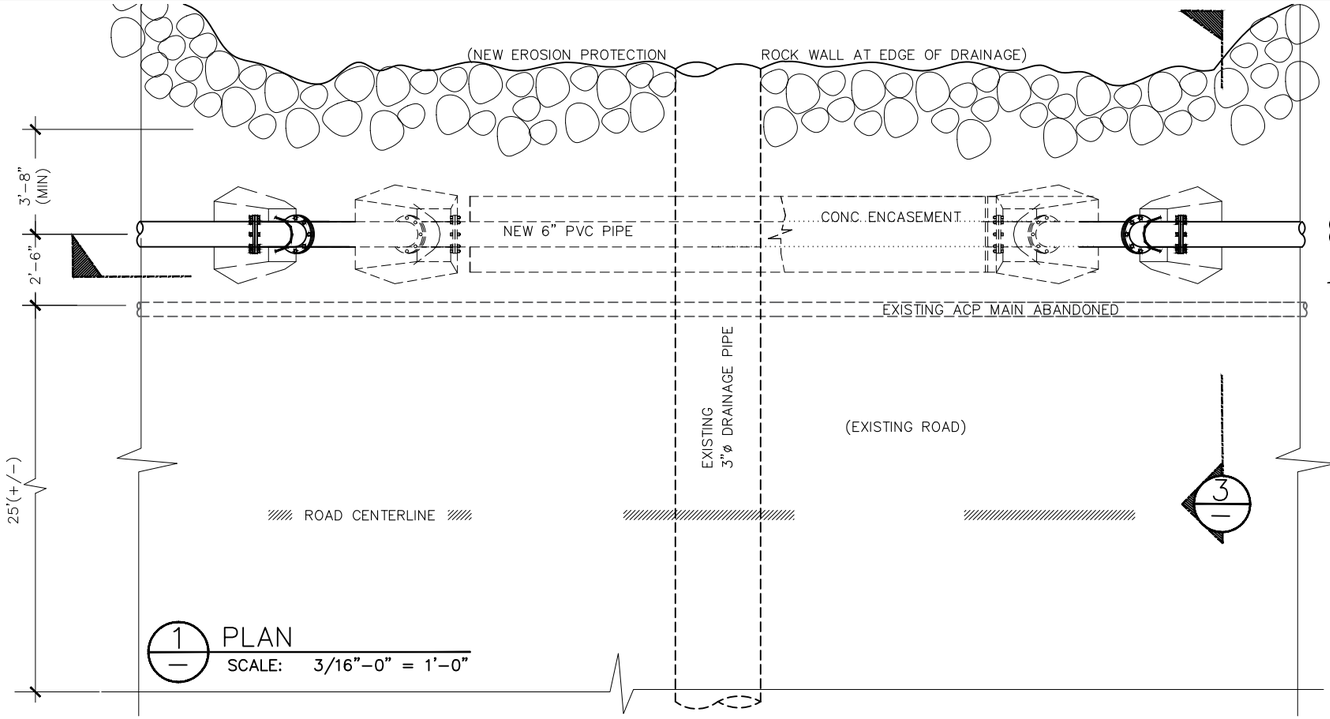

1 PLAN
SCALE: 3/16"-0" = 1'-0"

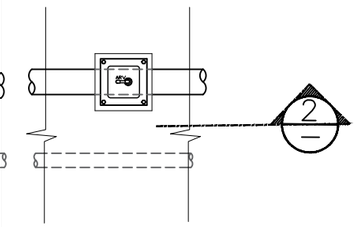

2 ARV VALVE
SCALE: 3/16"=1'-0"

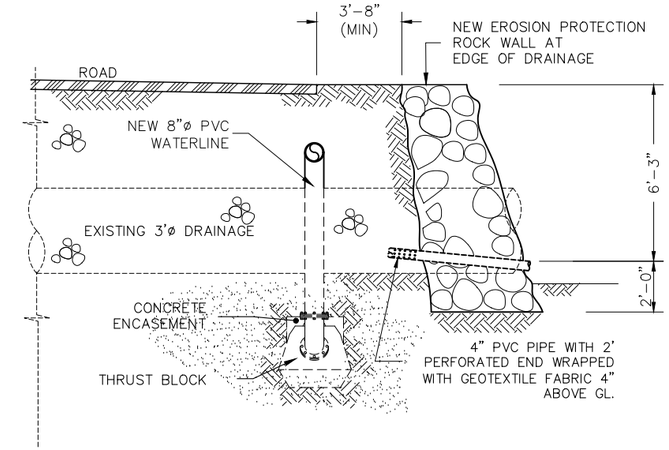

3 ROAD CROSSING (TYPICAL)
SCALE: 3/8"-0" = 1'-0"

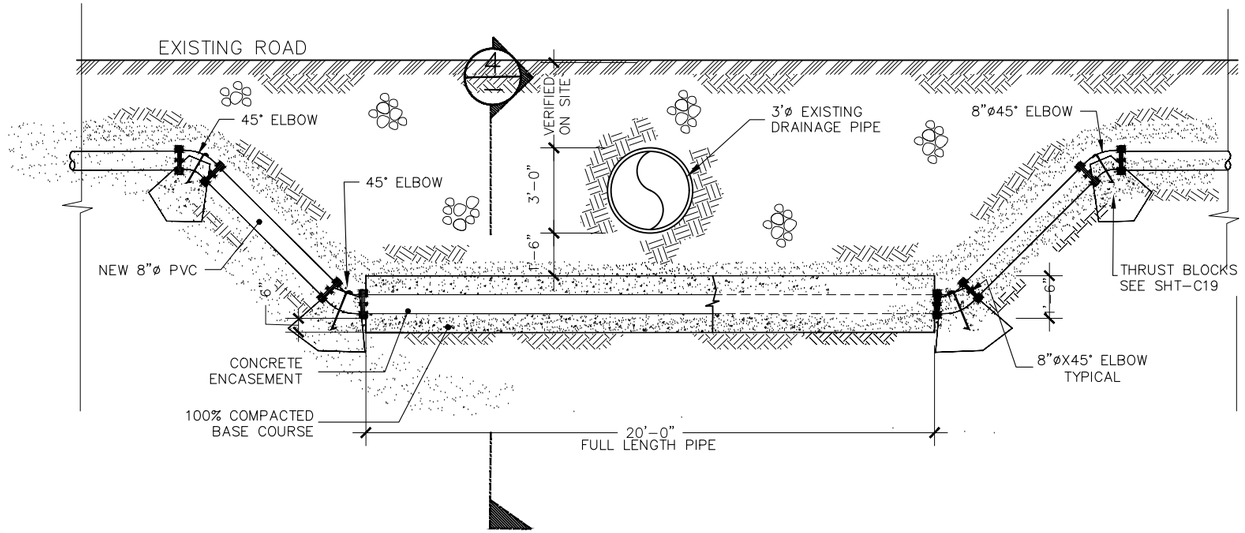

2 DRAINAGE CROSSING SECTION DETAILS
SCALE: 3/16"-0" = 1'-0"

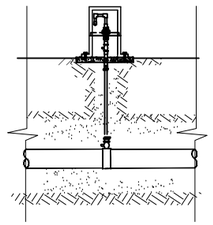

2 ARV VALVE
SCALE: 3/16"=1'-0"

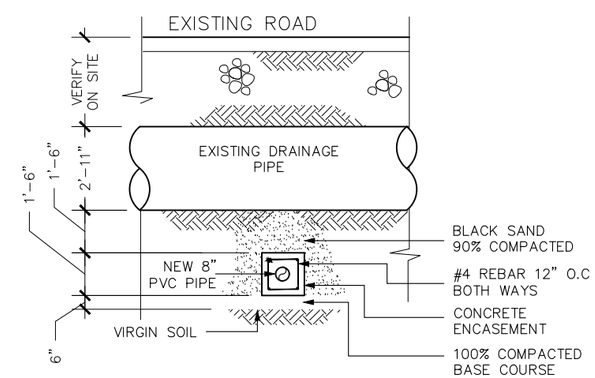

4 DRAINAGE LATITUDE SECTION DETAILS
SCALE: 3/16"-0" = 1'-0"

No.	Description	Date

REV. NO.:
REVISION:
CHECKED BY:
APPROVED BY:
DATE:

PREPARED BY: F.Toala.
CHECKED BY: L,Tyrell
APPROVED BY: F.Aquila
ISSUE FOR: Construction

AMERICAN SAMOA POWER AUTHORITY
ENVIRONMENTAL SERVICES DIVISION
P.O.BOX PPB, TAFUNA, PAGO PAGO, AS 96799

PROJECT NAME: VAITOGI WATERLINE REPLACEMENT PROJECT
DRAWING TITLE: TYPICAL MAIN ROAD DRAINAGE CROSSING SECTIONS & DETAILS
PROJECT LOCATION: VAITOGI VILLAGE, AMERICAN SAMOA

SCALE: AS SHOWN
PROJECT NO:
DATE: 7-2022
SHEET NO. D07
SIGNATURE:
DATE:

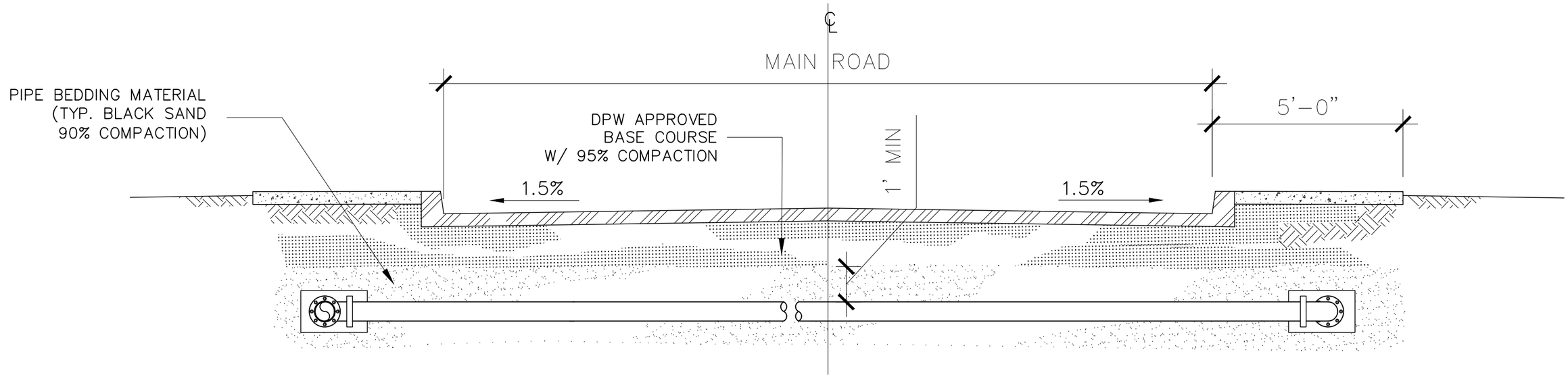

1 — MAIN ROAD CROSSING
SCALE: 3/8"-0" = 1'-0"

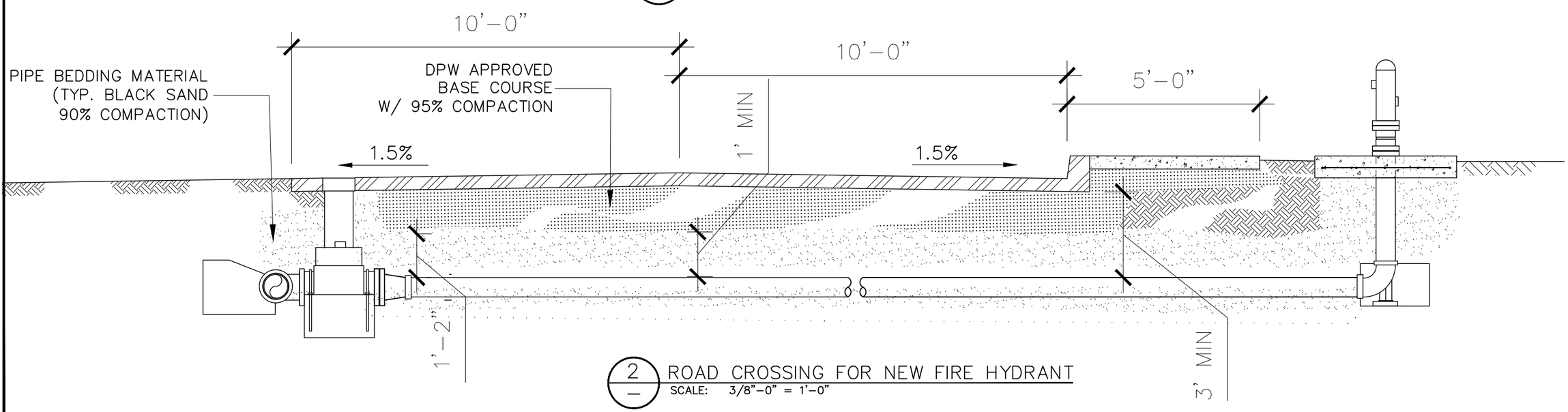

2 — ROAD CROSSING FOR NEW FIRE HYDRANT
SCALE: 3/8"-0" = 1'-0"

No.	Description	Date

REV. NO.:
REVISION:
CHECKED BY:
APPROVED BY:
DATE:

PREPARED BY: F.Toala.
CHECKED BY: L,Tyrell
APPROVED BY: F.Aquila
ISSUE FOR: Construction

AMERICAN SAMOA POWER AUTHORITY
ENVIRONMENTAL SERVICES DIVISION
P.O.BOX PPB, TAFUNA, PAGO PAGO, AS 96799

PROJECT NAME: VAITOGI WATERLINE REPLACEMENT PROJECT
DRAWING TITLE: TYPICAL MAIN ROAD CROSSING SECTION & DETAILS FOR NEW FIRE HYDRANT.
PROJECT LOCATION: VAITOGI VILLAGE AMERICAN SAMOA

SCALE: AS SHOWN
PROJECT NO:
DATE: 7-2022
SHEET NO. D08
SIGNATURE:
DATE:

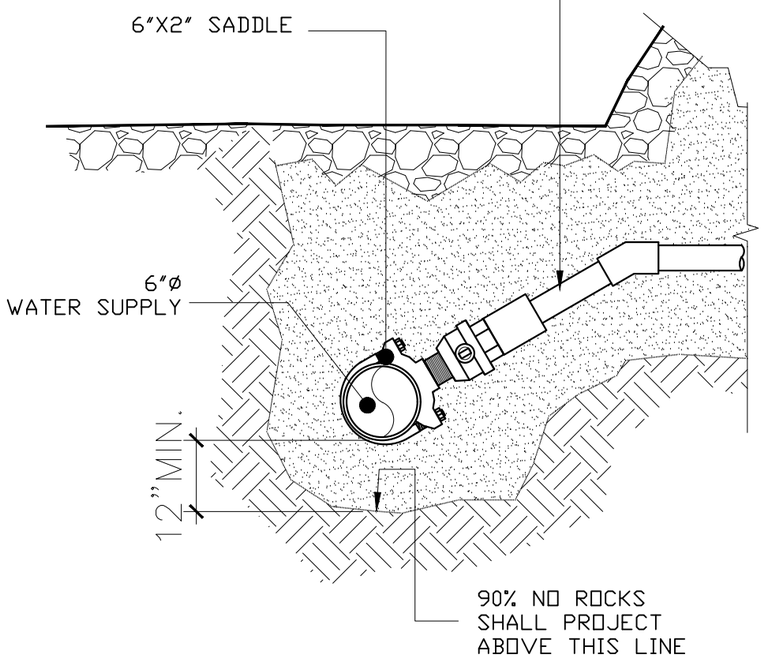

1 - 6"Ø TO 2"Ø CONNECTION (SECTION ELEVATION)
SCALE: 1/2" = 1'

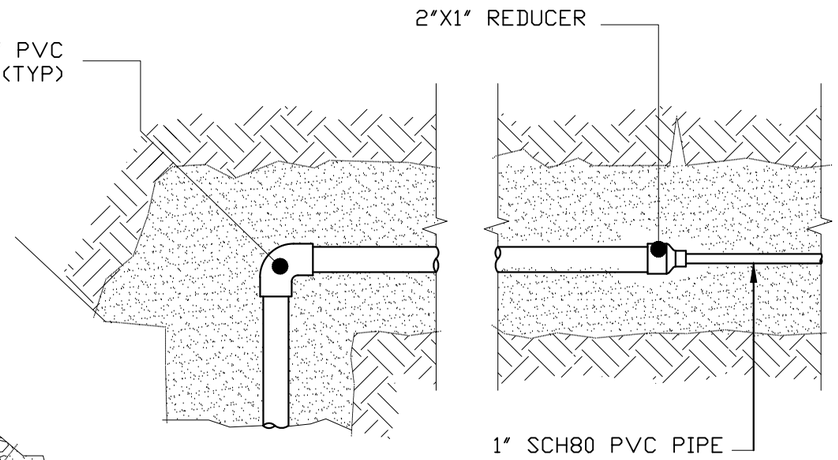

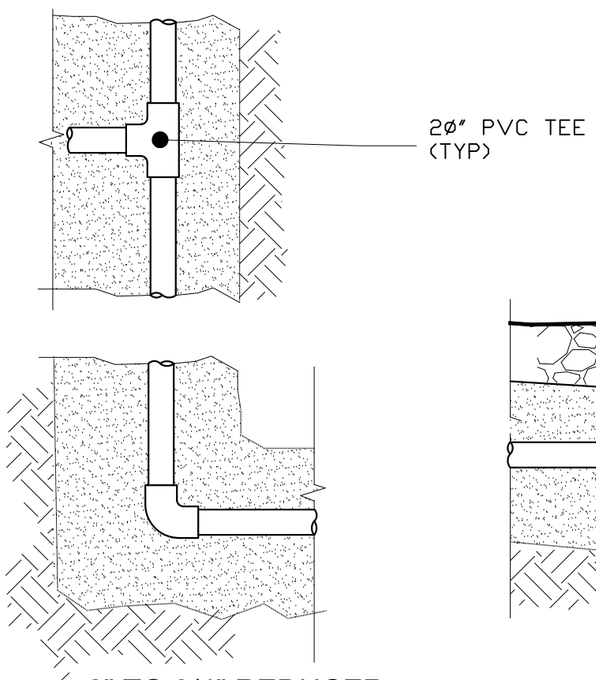

2 - 2" TO 3/4" REDUCER (PLAN ELEVATION)
SCALE: 1/2" = 1'

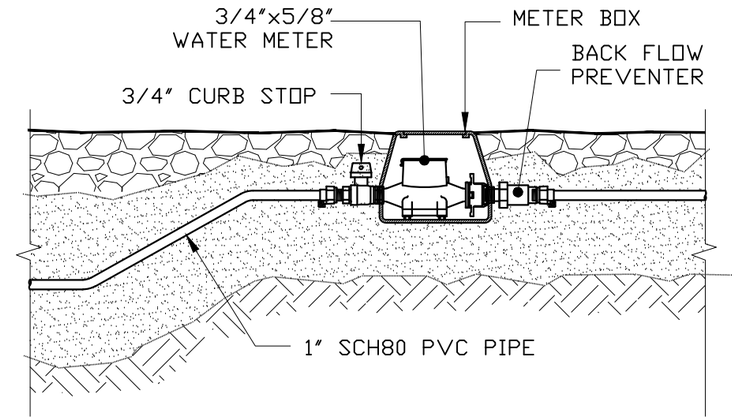

3 - 3/4" WATER METER (SECTION ELEVATION)
SCALE: 1/2" = 1'

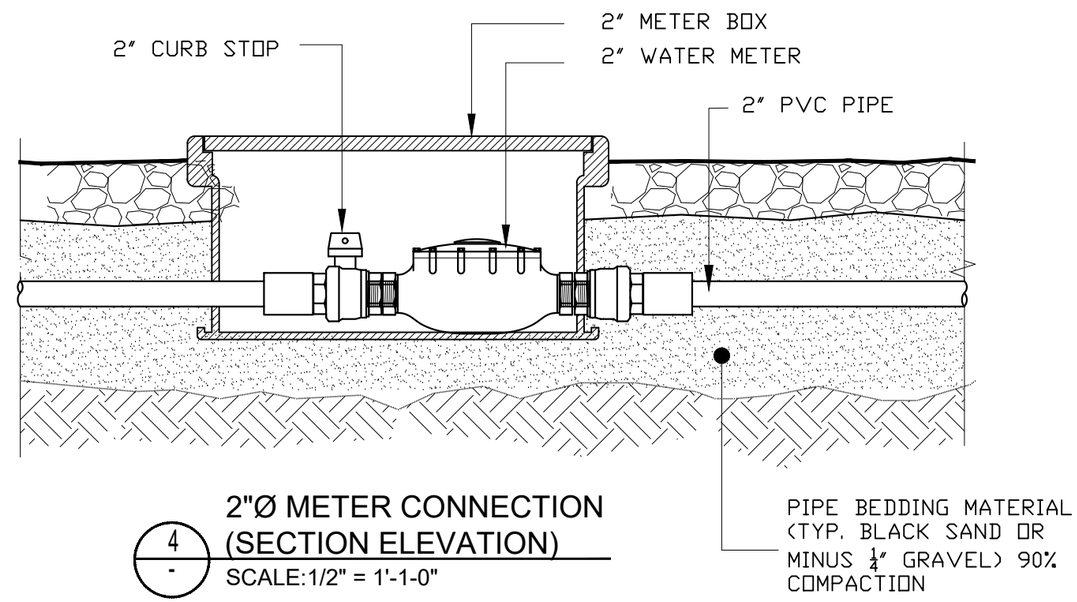

4 - 2"Ø METER CONNECTION (SECTION ELEVATION)
SCALE:1/2" = 1'-1-0"

No.	Description	Date

REV. NO.:
REVISION:
CHECKED BY:
APPROVED BY:
DATE:

PREPARED BY: F.Toala.
CHECKED BY: L,Tyrell
APPROVED BY: F.Aquila
ISSUE FOR: Construction

AMERICAN SAMOA POWER AUTHORITY
ENVIRONMENTAL SERVICES DIVISION
P.O.BOX PPB, TAFUNA, PAGO PAGO, AS 96799

PROJECT NAME: VAITOGI WATERLINE REPLACEMENT PROJECT
DRAWING TITLE: TYPICAL PVC PIPE SERVICE LINE LAYOUT & CONNECTION DETAILS
PROJECT LOCATION: VAITOGI VILLAGE, AMERICAN SAMOA

SCALE: AS SHOWN
PROJECT NO:
DATE: 7-2022
SHEET NO. D09
SIGNATURE:
DATE:

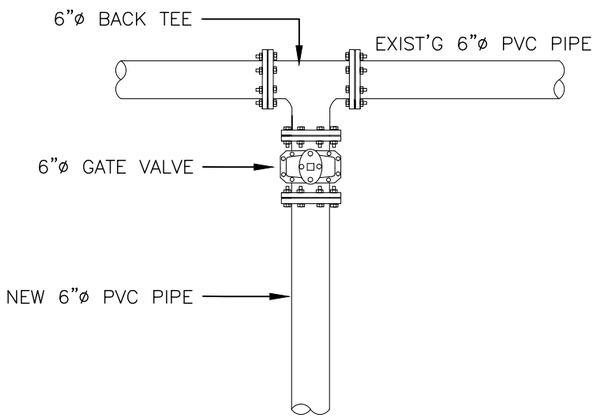

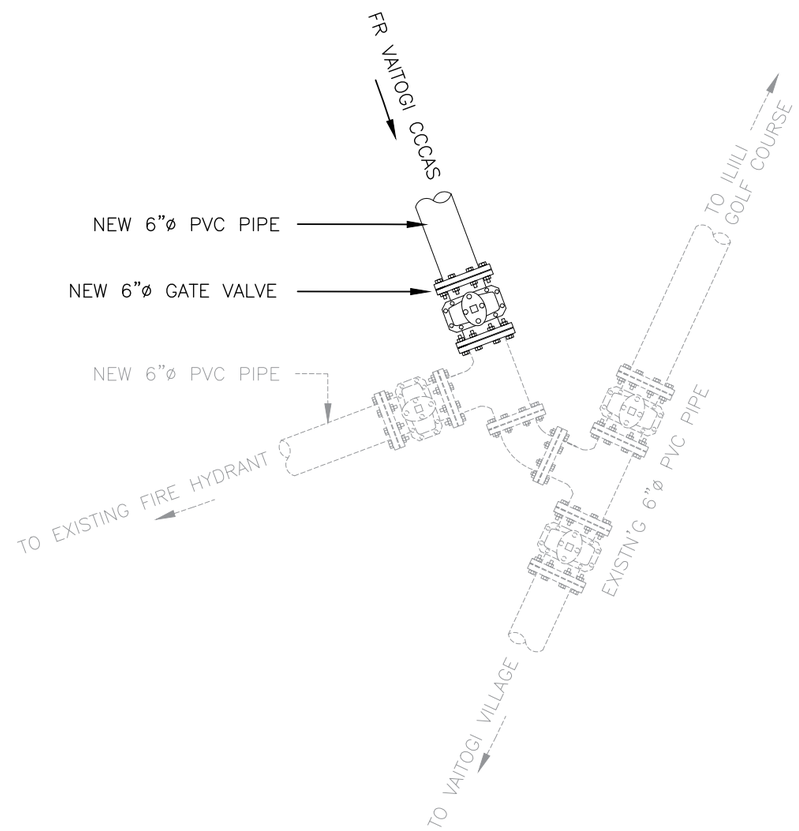

C01 TIE IN #1 PLAN
STA, 0+20 (SEGMENT 1 START)

C05 TIE IN #2 PLAN
STA, 0+50 (SEGMENT 2 START)

C07 TIE IN #3 PLAN
STA, 0+00 (SEGMENT 3 START)

C07 TIE IN #4 PLAN
STA, 18+80 (SEGMENT 3 END)

TYPICAL TIE-IN DETAILS & LOCATIONS

SCALE: 3/16"-0" = 1'-0"

No.	Description	Date

REV. NO.:
REVISION:
CHECKED BY:
APPROVED BY:
DATE:

PREPARED BY: F.Toala.
CHECKED BY: L,Tyrell
APPROVED BY: F.Aquila
ISSUE FOR: Construction

AMERICAN SAMOA POWER AUTHORITY
ENVIRONMENTAL SERVICES DIVISION
P.O.BOX PPB, TAFUNA, PAGO PAGO, AS 96799

PROJECT NAME: VAITOGI WATERLINE REPLACEMENT PROJECT
DRAWING TITLE: TIE-IN TO MAIN WATER SUPPLY WITH WITH ADDITIONAL STANDARD DETAILS.
PROJECT LOCATION: VAITOGI VILLAGE, AMERICAN SAMOA

SCALE: AS SHOWN
PROJECT NO:
DATE: 7-2022
SHEET NO. D10
SIGNATURE:
DATE:

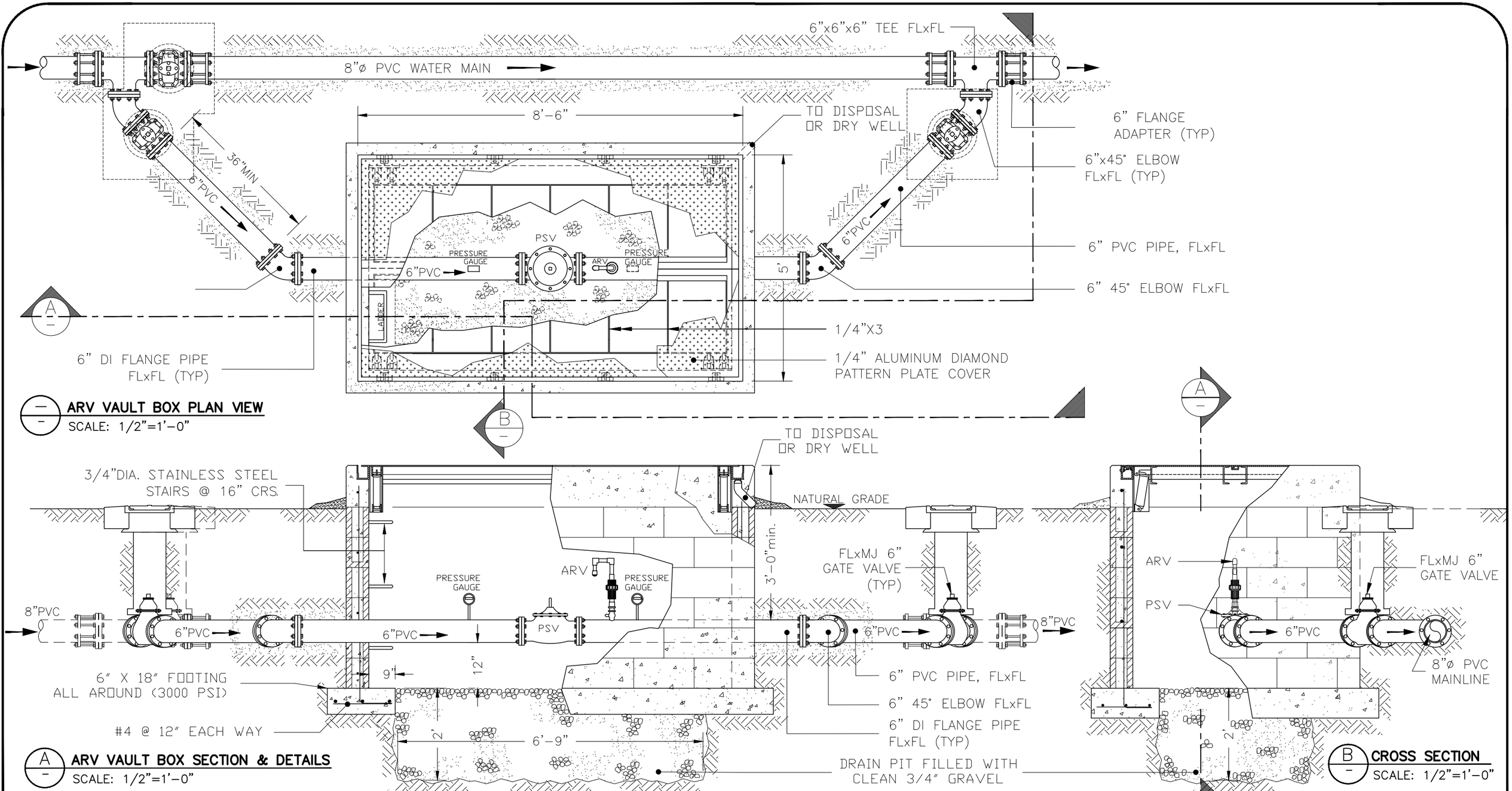

No.	Description	Date

REV. NO.:

REVISION:

CHECKED BY:

APPROVED BY:

DATE:

PREPARED BY: F.Toala.

CHECKED BY: L,Tyrell

APPROVED BY: F.Aquila

ISSUE FOR: Construction

AMERICAN SAMOA POWER AUTHORITY
ENVIRONMENTAL SERVICES DIVISION
P.O.BOX PPB, TAFUNA, PAGO PAGO, AS 96799

PROJECT NAME: VAITOGI WATERLINE REPLACEMENT PROJECT

DRAWING TITLE: AIR RELIEF VALVE VAULT SECTION DETAIL

PROJECT LOCATION: VAITOGI VILLAGE, AMERICAN SAMOA

SCALE: AS SHOWN

PROJECT NO:

DATE: 7-2022

SHEET NO. D11

SIGNATURE:

DATE:

EROSION AND TEMPORARY DUST CONTROL

1. DURING CONSTRUCTION, PREVENTIVE MAINTENANCE MEASURES SHALL BE USED TO CONTROL FORESEEABLE DUST, EROSION OR SEDIMENTATION PROBLEMS WHICH MAY ARISE AS THE JOB PROGRESSES.
2. FUGITIVE DUST AND SOLID WASTE DISPOSAL DURING GRUBBING ACTIVITIES SHALL MEET REQUIREMENTS OF ADMINISTRATIVE RULES, TITLE II, CHAPTER 60, AIR POLLUTION CONTROL AND CHAPTER 58, SOLID WASTE MANAGEMENT CONTROL.
3. THE CONTRACTOR AT HIS OWN EXPENSE, SHALL KEEP THE PROJECT AREA AND SURROUNDING AREA FREE FROM DUST NUISANCE. THE WORK SHALL BE IN CONFORMANCE WITH THE AIR POLLUTION CONTROL STANDARDS AND REGULATIONS OF THE STATE DEPARTMENT OF HEALTH.
4. WHERE CONSTRUCTION ACTIVITY ON A PORTION OF THE SITE IS TEMPORARILY CEASED, AND EARTH DISTURBING ACTIVITIES WILL BE RESUMED WITHIN 14 DAYS, TEMPORARILY STABILIZATION MEASURES DO NOT HAVE TO BE INITIATED ON THAT PORTION OF THE SITE. ALL EXPOSED AREAS TO BE LEFT EXPOSED FOR LONGER THAN FOURTEEN (14) DAYS SHALL BE HYDROMULCH SEEDED WITH RYE GRASS.
5. ALL SLOPES AND EXPOSED AREAS SHALL BE SODDED OR PLANTED AS SOON AS FINAL GRADES HAVE BEEN ESTABLISHED. PLANTING SHALL NOT BE DELAYED UNTIL ALL GRADING WORKS HAS BEEN COMPLETED. GRADING TO FINAL GRADE SHALL BE CONTINUOUS, AND ANY AREA WITHIN WHICH WORK HAS BEEN INTERRUPTED OR DELAYED SHALL BE PLANTED.

BEST MANAGEMENT PRACTICE NOTES

1. MEASURES TO CONTROL EROSION AND OTHER POLLUTANTS SHALL BE IN PLACE BEFORE ANY WORK IS INITIATED. THESE MEASURES SHALL BE PROPERLY CONSTRUCTED AND MAINTAINED THROUGHOUT THE CONSTRUCTION PERIOD.
2. ALL TEMPORARY EROSION CONTROL MEASURES SHALL BE CHECKED AND REPAIRED AS NECESSARY.
3. GRASSING OR MULCHING OF EXPOSED AREAS TO BE DONE AS FINISH GRADES ARE ESTABLISHED.
4. DIVERSION OF STORM RUNOFF AWAY FROM THE FILL SLOPES UNTIL GRASSING ON THE FILL SLOPES ARE ESTABLISHED.
5. PROVIDE STABILIZED CONSTRUCTION ENTRANCE.

NOTES:

1. STABILIZED CONSTRUCTION ENTRANCE SHALL BE MAINTAINED AT THE EGRESS AND INGRESS TO THE SITE. TIRE WASH MAY BE USED IN LIEU OF STABILIZED CONSTRUCTION ENTRANCE. CONTRACTOR IS RESPONSIBLE TO KEEP ROADWAYS CLEAN FROM SOIL AND CONSTRUCTION DEBRIS.
2. DUST CONTROL SHOULD BE APPLIED TO REDUCE DUST EMISSIONS. WATER THE AREA DURING CONSTRUCTION TO CONTROL DUST.
3. ALL STORM DRAIN INLETS ON SITE AND THOSE OFF SITE WHICH MAY RECEIVE RUN OFF FROM THE SITE SHALL USE AN INLET PROTECTION DEVICE.

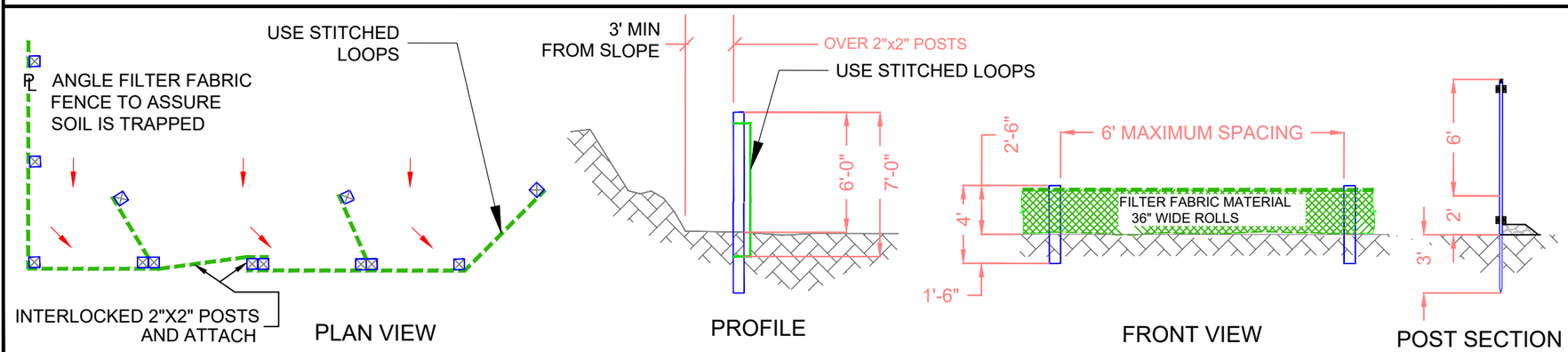

NOTES:

1. BURY BOTTOM OF FILTER FABRIC 6" VERTICALLY BELOW FINISHED GRADE.
2. 2"X2" FIR, PINE OR STEEL FENCE POSTS.
3. POSTS TO BE INSTALLED ON UPHILL SIDE OF SLOPE.
4. COMPACT BOTH SIDES OF FILTER FABRIC TRENCH.
5. PANELS MUST BE PLACED ACCORDING TO SPACING ON DETAIL NO.940

CONSTRUCTION ENTRANCE	CE
SILT FENCE	SF
DIVERSION DIKE	DD
RIGHT-OF-WAY DIVERSION	RWD
TEMPORARY LEVEL SPREADER	LS
TEMPORARY LEVEL DIVERTION	LD
TEMPORARY FILL DIVERSION	TFD
INLET PROTECTION	IP
EC-2 MATTING	B/M
EC-3 MATTING	B/M
EXISTING TREELINE	
EXISTING WATERS	
EXISTING 100' STREAM BUFFER	
PROPOSED TREELINE	
PROPOSED GRADING	
SEDIMENT BASIN DRAINAGE AREA	
PEA GRAVEL LEVEL SPREADER	
PEA GRAVEL LEVEL SPREADER	
LIMIT OF DISTURBANCE	
DC NOTE: DUST CONTROL MEASURES ARE TO BE USED ONSITE AS NECESSARY THROUGHOUT THE CONSTRUCTION ACTIVITY	

No.	Description	Date

REV. NO.:
REVISION:
CHECKED BY:
APPROVED BY:
DATE:

PREPARED BY: F.Toala.
CHECKED BY: L.Tyrell
APPROVED BY: F.Aquila
ISSUE FOR: Construction

AMERICAN SAMOA POWER AUTHORITY
ENVIRONMENTAL SERVICES DIVISION
P.O.BOX PPB, TAFUNA, PAGO PAGO, AS 96799

PROJECT NAME: VAITOGI WATERLINE REPLACEMENT PROJECT

DRAWING TITLE: EROSION AND SEDIMENTATION CONTROL GENERAL NOTES, CONSTRUCTION SITE SIGNS & SYMBOLS DEFINITIONS.

PROJECT LOCATION: VAITOGI VILLAGE, AMERICAN SAMOA

SCALE: SCALE TO FIT
PROJECT NO:
DATE: OCT-22
SHEET NO. ESC-1
SIGNATURE:
DATE:

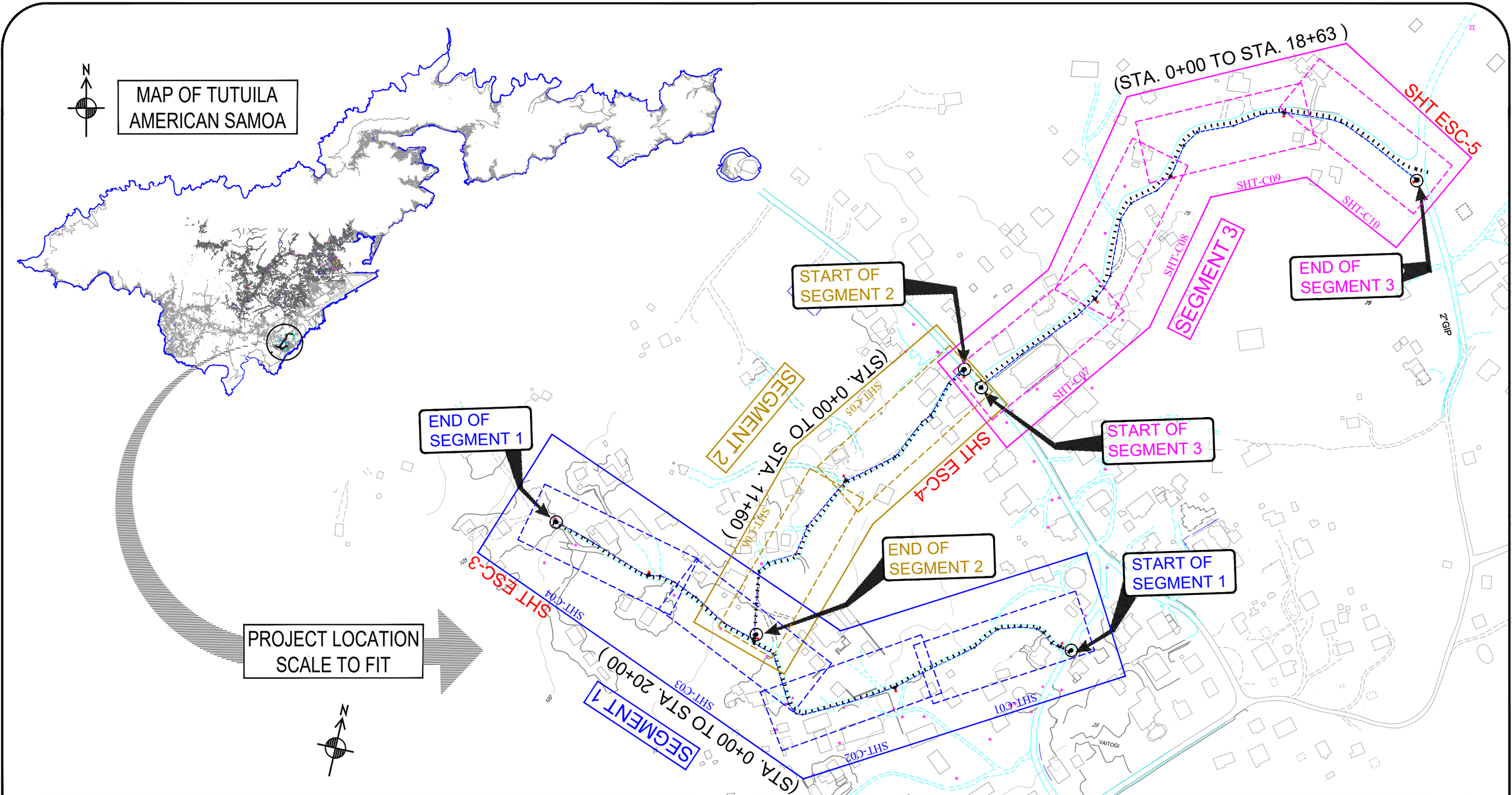

No.	Description	Date

REV. NO.:

REVISION:

CHECKED BY:

APPROVED BY:

DATE:

PREPARED BY: F.Toala.

CHECKED BY: L.Tyrell

APPROVED BY: F.Aquila

ISSUE FOR: Construction

AMERICAN SAMOA POWER AUTHORITY
ENVIRONMENTAL SERVICES DIVISION
P.O.BOX PPB, TAFUNA, PAGO PAGO, AS 96799

PROJECT NAME: VAITOGI WATERLINE REPLACEMENT PROJECT

DRAWING TITLE: EROSION AND SEDIMENTATION CONTROL (VICINITY MAP)

PROJECT LOCATION: VAITOGI VILLAGE, AMERICAN SAMOA

SCALE: SCALE TO FIT

PROJECT NO:

DATE: OCT-22

SHEET NO. ESC-2

SIGNATURE:

DATE:

NOTE:
REFER TO SHEET ESC-1
FOR NOTES, SIGNS &
SYMBOL DEFINITIONS

SHT-C01
SHT-C02
SHT-C03
SHT-C04

7th DAYS ADVENTIST CHURCH

(VAITOGI VILLAGE)

(SEGMENT 2)

DC

SEGMENT 1
PROJECT LOCATION
SCALE TO FIT

No.	Description	Date

REV. NO.:
REVISION:
CHECKED BY:
APPROVED BY:
DATE:

PREPARED BY: F.Toala.
CHECKED BY: L.Tyrell
APPROVED BY: F.Aquila
ISSUE FOR: Construction

AMERICAN SAMOA POWER AUTHORITY
ENVIRONMENTAL SERVICES DIVISION
P.O.BOX PPB, TAFUNA, PAGO PAGO, AS 96799

PROJECT NAME: VAITOGI WATERLINE REPLACEMENT PROJECT

DRAWING TITLE: SEGMENT 1, EROSION AND SEDIMENTATION CONTROL (STA. 0+00 TO STA. 20.00)

PROJECT LOCATION: VAITOGI VILLAGE, AMERICAN SAMOA

SCALE: SCALE TO FIT

PROJECT NO:

DATE: OCT 22

SHEET NO. ESC-3

SIGNATURE:

DATE:

NOTE:
REFER TO SHEET ESC-1
FOR NOTES, SIGNS &
SYMBOL DEFINITIONS

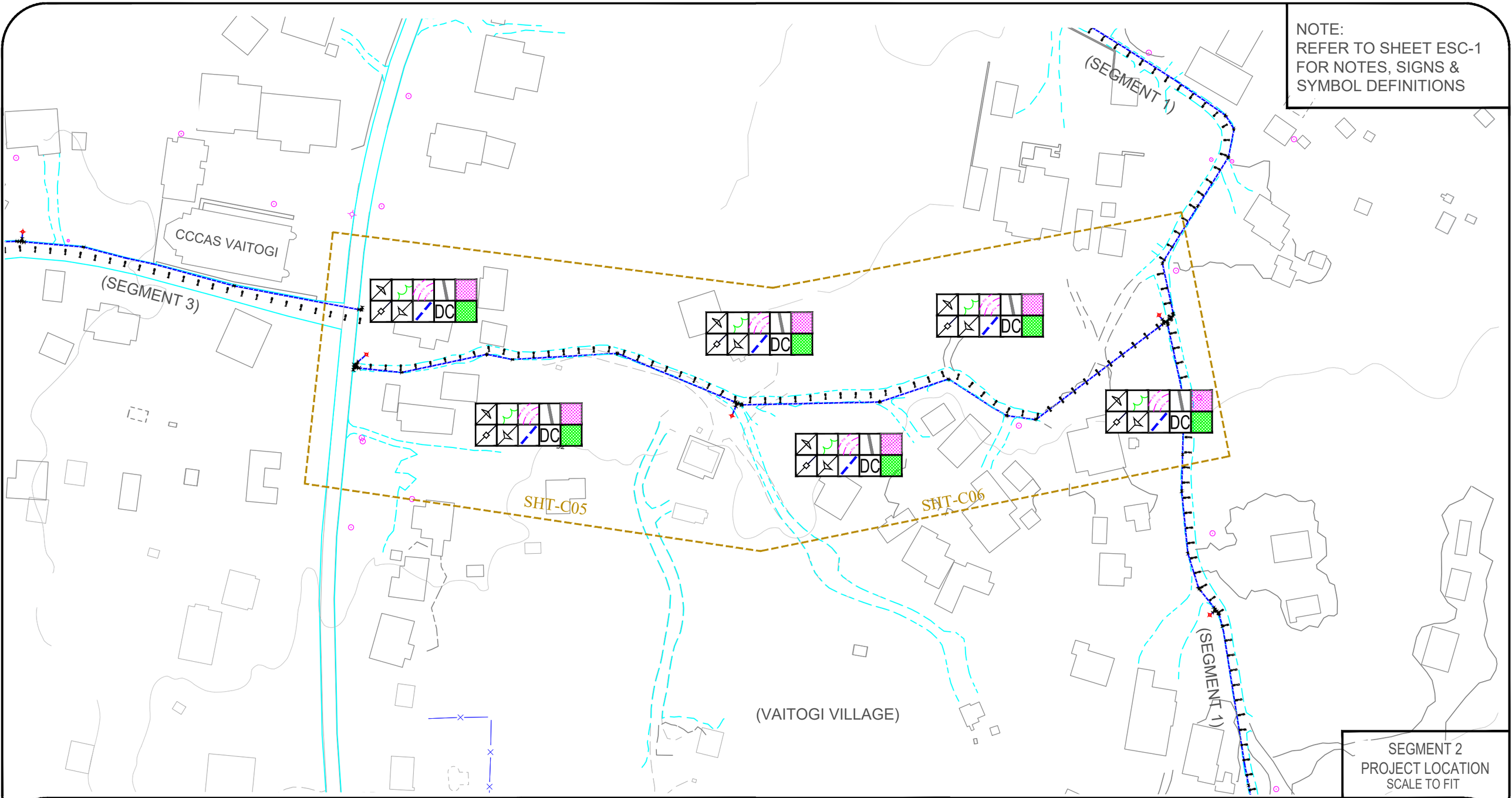

SEGMENT 2
PROJECT LOCATION
SCALE TO FIT

No.	Description	Date

REV. NO.:
REVISION:
CHECKED BY:
APPROVED BY:
DATE:

PREPARED BY: F.Toala.
CHECKED BY: L.Tyrell
APPROVED BY: F.Aquila
ISSUE FOR: Construction

AMERICAN SAMOA POWER AUTHORITY
ENVIRONMENTAL SERVICES DIVISION
P.O.BOX PPB, TAFUNA, PAGO PAGO, AS 96799

PROJECT NAME: VAITOGI WATERLINE REPLACEMENT PROJECT

DRAWING TITLE: SEGMENT 2, EROSION AND SEDIMENTATION CONTROL (STA. 0+00 TO STA. 11.80)

PROJECT LOCATION: VAITOGI VILLAGE, AMERICAN SAMOA

SCALE: SCALE TO FIT

PROJECT NO:

DATE: OCT 22

SHEET NO. ESC-4

SIGNATURE:

DATE:

NOTE:
REFER TO SHEET ESC-1
FOR NOTES, SIGNS &
SYMBOL DEFINITIONS

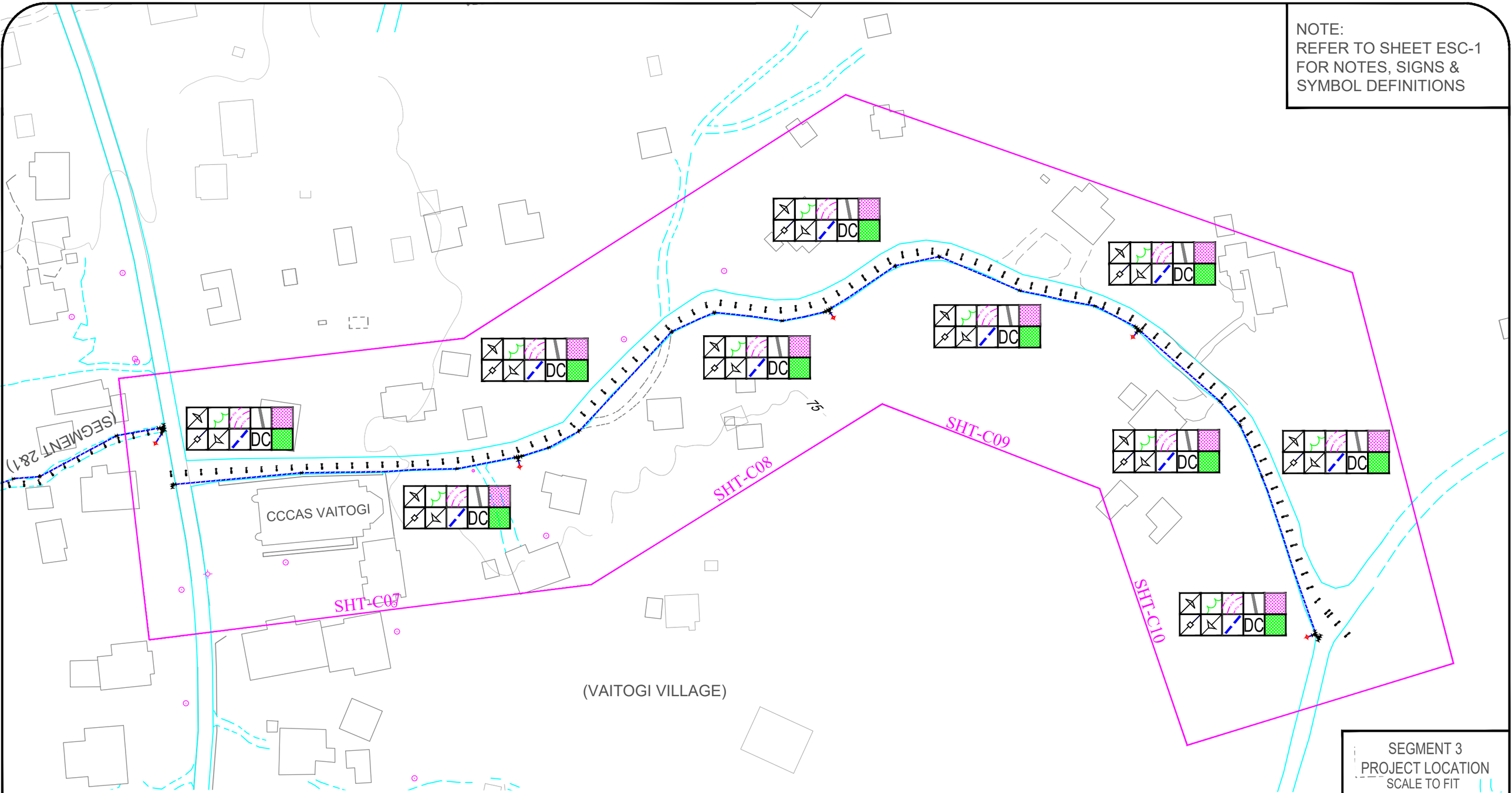

SEGMENT 3
PROJECT LOCATION
SCALE TO FIT

No.	Description	Date

REV. NO.:
REVISION:
CHECKED BY:
APPROVED BY:
DATE:

PREPARED BY: F.Toala.
CHECKED BY: L.Tyrell
APPROVED BY: F.Aquila
ISSUE FOR: Construction

AMERICAN SAMOA POWER AUTHORITY
ENVIRONMENTAL SERVICES DIVISION
P.O.BOX PPB, TAFUNA, PAGO PAGO, AS 96799

PROJECT NAME: VAITOGI WATERLINE REPLACEMENT PROJECT

DRAWING TITLE: SEGMENT 3, EROSION AND SEDIMENTATION CONTROL (STA. 0+00 TO STA. 18.63)

PROJECT LOCATION: VAITOGI VILLAGE, AMERICAN SAMOA

SCALE: SCALE TO FIT
PROJECT NO:
DATE: OCT 22
SHEET NO. ESC-5
SIGNATURE:
DATE:

VAITOGI WATERLINE REPLACEMENT PROJECT
TUTUILA ISLAND, AMERICAN SAMOA.

ABBREVIATIONS:

@	AT	PROP	PROPOSED
AFF	ABOVE FINISHED FLOOR	PVC	POLYVINYL CHLORIDE PIPE
AFG	ABOVE FINISHED GRADE	PE	POLYETHYLENE PIPE
AGG	AGGREGATE	ACP	ASBESTOS CEMENT PIPE
ARV	AIR/VAC RELEASE VALVE	GA	GAUGE
AS–EPA	AMERICAN SAMOA ENVIRONMENTAL PROTECTION AGENCY	GALV	GALVANIZED
BLDG	BUILDING	GR	GRADE
CB	CATCH BASIN	GV	GATEVALVE
CI	CAST IRON	HB	HOSE BIB
CL	CENTER LINE	HWY	HIGHWAY
CMP	CORRUGATED METAL PIPE	ID	INSIDE DIAMETER
CO	CLEAN OUT	INSUL	INSULATION
CONC	CONCRETE	INV	INVERT
CP	CONTROL POINT	IR	IRON ROD
DET	DETAIL	JT	JOINT
DIA	DIAMETER	LT	LEFT
DIM	DIMENSION	M	METER
DIP	DUCTILE IRON PIPE	MANUF	MANUFACTURED
DW	DRIVEWAY	MAX	MAXIMUM
E	EAST	MFR	MANUFACTURER
ELEV	ELEVATION	MH	MANHOLE
ELEC	ELECTRICAL	MIN	MINIMUM
EOL	END OF LINE	MISC	MISCELLANEOUS
EOP	EDGE OF PAYMENT	(N)	NEW
EQ	EQUAL	N	NORTH
EXT'G	EXISTING	NIC	NOT IN CONTRACT
EXT	EXTERIOR	NO	NOT OPEN
FD	FLOOR DRAIN	NC	NORMALLY CLOSED
FH	FIRE HYDRANT	NTS	NOT TO SCALE
FIN	FINISHED	OC	ON CENTER
FLR	FLOOR	OD	OUTSIDE DIAMETER
FND	FOUND	OH	OVERHEAD
FT	FEET	OSHA	OCCUPATIONAL SAFETY HEALTH ADMINISTRATION
FTG	FOOTING	SC	SERVICE CONNECTION
PL	PROPERTY LINE		

No.	Description	Date

REV. NO.:

REVISION:

CHECKED BY:

APPROVED BY:

DATE:

PREPARED BY: F.Toala.

CHECKED BY: L.Tyrell

APPROVED BY: F.Aquila

ISSUE FOR: Construction

AMERICAN SAMOA POWER AUTHORITY
ENVIRONMENTAL SERVICES DIVISION
P.O.BOX PPB, TAFUNA, PAGO PAGO, AS 96799

PROJECT NAME: VAITOGI WATERLINE REPLACEMENT PROJECT

DRAWING TITLE: TABLE OF CONTENTS & ABBREVIATIONS

PROJECT LOCATION: VAITOGI VILLAGE, AMERICAN SAMOA

SCALE: NTS

PROJECT NO:

DATE: 7-2022

SHEET NO. G1

SIGNATURE:

DATE:

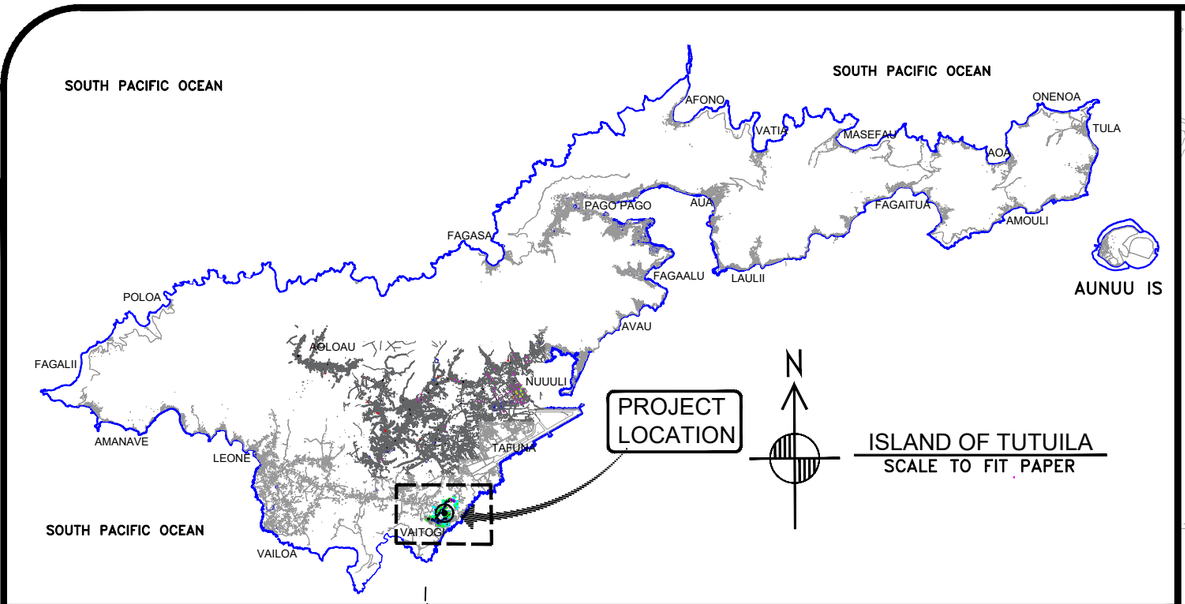

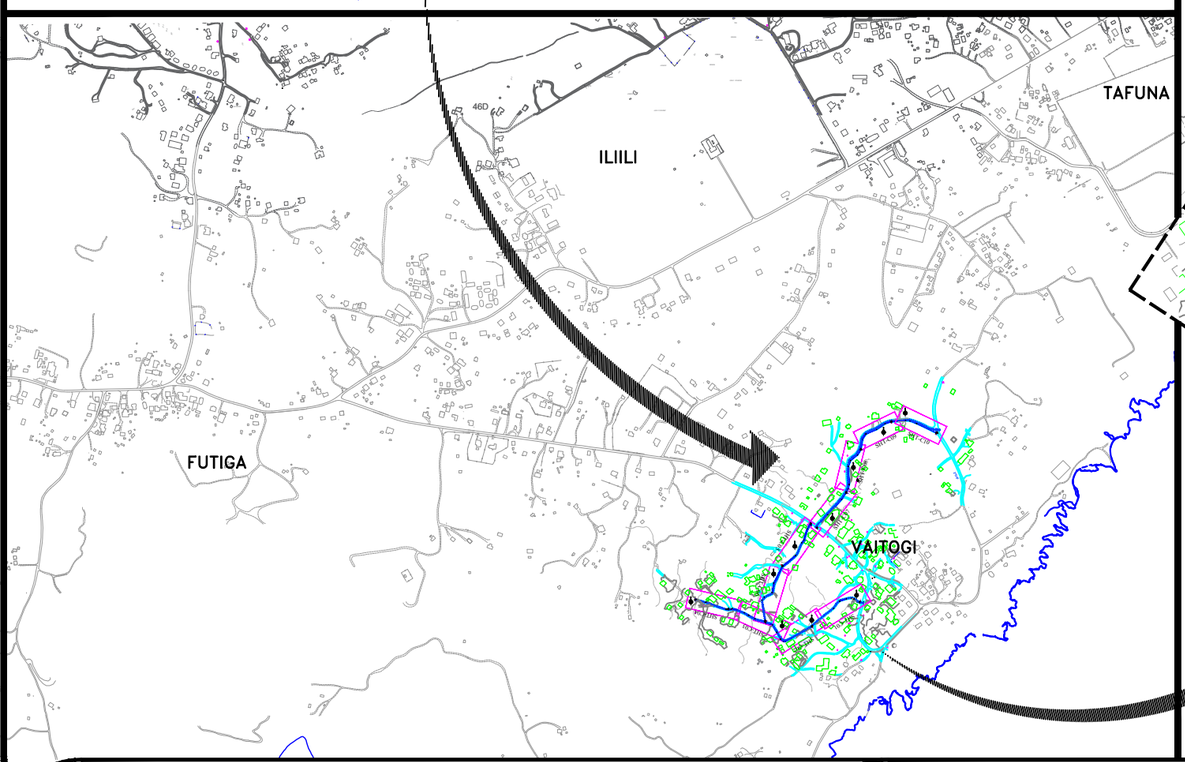

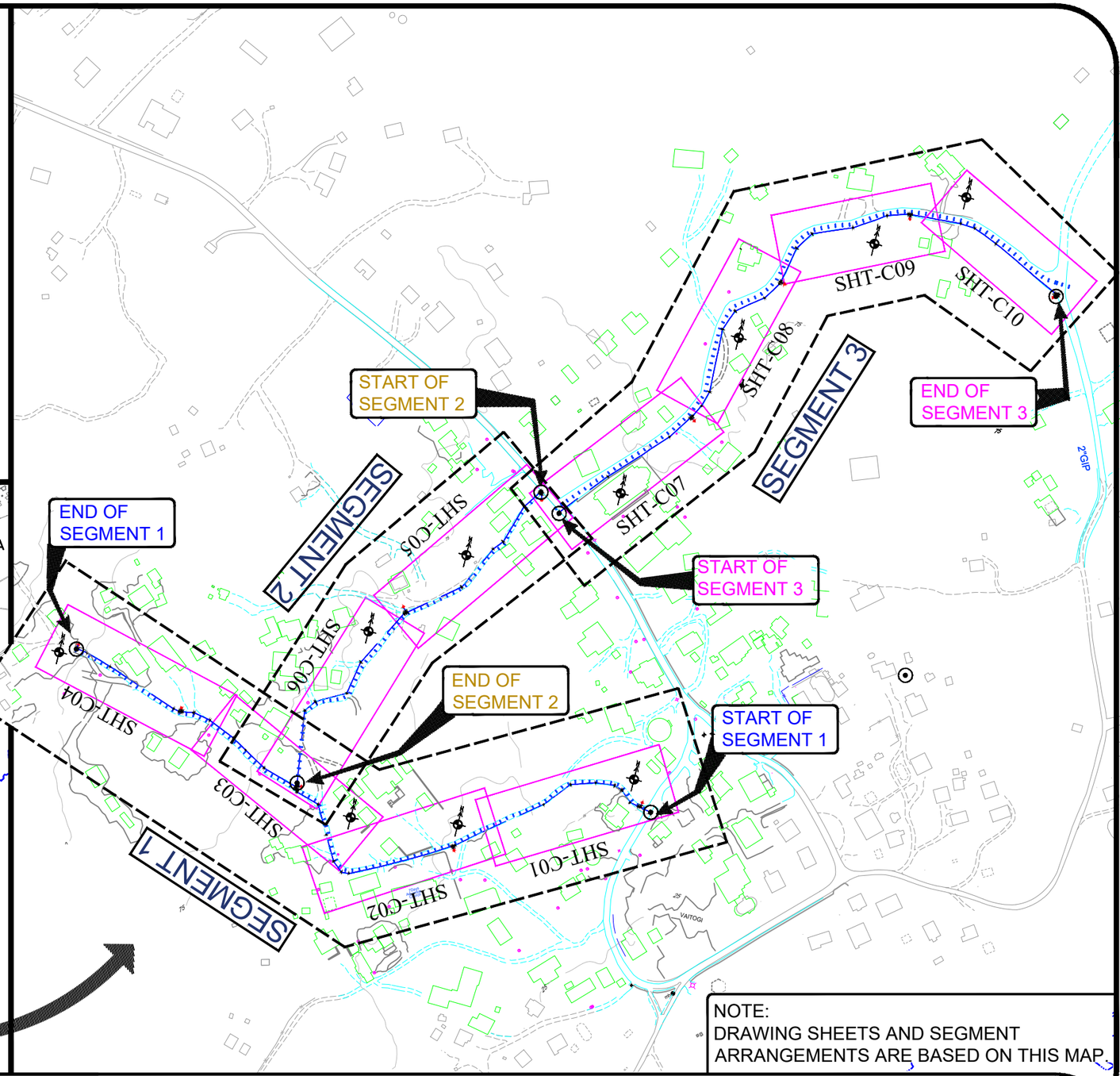

NOTE:
DRAWING SHEETS AND SEGMENT ARRANGEMENTS ARE BASED ON THIS MAP.

No.	Description	Date

REV. NO.:

REVISION:

CHECKED BY:

APPROVED BY:

DATE:

PREPARED BY: F.Toala.

CHECKED BY: L.Tyrell

APPROVED BY: F.Aquila

ISSUE FOR: Construction

AMERICAN SAMOA POWER AUTHORITY
ENVIRONMENTAL SERVICES DIVISION
P.O.BOX PPB, TAFUNA, PAGO PAGO, AS 96799

PROJECT NAME: VAITOGI WATERLINE REPLACEMENT PROJECT

DRAWING TITLE: VICINITY MAP

PROJECT LOCATION: VAITOGI VILLAGE, AMERICAN SAMOA

SCALE: NTS

PROJECT NO:

DATE: 7-2022

SHEET NO. G2

SIGNATURE:

DATE:

LEGEND:

- WATER MAIN
- EXISTING WATER MAIN
- GATE VALVE
- FIRE HYDRANT
- ELBOW
- TEE
- ARV
- EXISTING WELL
- BENCH MARK
- POWER POLE
- WATER METER W/ BOX
- WATER SERVICE LINE
- GATE VALVE W/ BOX
- PAVED ROAD
- UNPAVED ROAD
- SIGN POST
- DIAMETER
- PRESSURE GAUGE
- CONTOUR LINE
- PRV

UTILITY GENERAL NOTES:

1. EXISTING WATERLINE LOCATIONS ARE APPROXIMATE. CONTRACTOR SHALL COORDINATE LOCATING EXISTING UTILITY WITH ASPA OR OWNERS OF UTILITY LINES PRIOR TO EXCAVATION WITH APPROPRIATE ADVANCE NOTIFICATION.

2. ABANDON EXISTING WATER MAIN AND SERVICES IN PLACE ONLY AFTER THE NEW WATER MAIN HAS BEEN DISINFECTED AND APPROVED BY THE AMERICAN SAMOA POWER AUTHORITY (ASPA) AND THE AMERICAN SAMOA ENVIRONMENTAL PROTECTION AGENCY.

3. ALL GATE VALVES ARE TO BE INSTALLED WITH VALVE BOXES PER DRAWINGS AND SPECIFICATIONS.

4. ALL FLUSH VALVES ARE TO BE INSTALLED IN VALVE BOXES PER DRAWINGS AND SPECIFICATIONS.

5. ALL STATION LOCATIONS ARE APPROXIMATE.

6. CONTRACTOR IS RESPONSIBLE FOR MEETING CONDITIONS OF THE PNRS LAND-USE PERMIT.

7. FOR CONFLICT BETWEEN DRAWINGS AND SPECIFICATIONS, PNRS PERMIT REQUIREMENTS AND CONDITIONS SHALL APPLY, THEN SPECIFICATIONS, THEN DRAWINGS.

8. CONTRACTOR MUST CONFORM WITH ALL REQUIREMENTS OF THE OSHA STANDARD FOR EXCAVATION SAFETY (29 CFR 1926 SUBPART P). INCLUDED AMONG THE OSHA STANDARDS IS THE REQUIREMENT FOR PROTECTION OF WORKERS IN EXCAVATIONS 4 FEET OR GREATER IN DEPTH. PROTECTIVE SYSTEMS CAN BE SLOPING/BENCHING OF EXCAVATION WALLS, OR INSTALLATION OF SUPPORT/SHIELDING DEVICES. DESIGN OF PROTECTIVE SYSTEMS MUST BE BASED ON FIELD CLASSIFICATION OF THE SOIL BY A COMPETENT PERSON. PROTECTIVE SYSTEMS MUST BE IN ACCORDANCE WITH THE TABLES AND FIGURES SHOWN IN THE OSHA STANDARDS, OR MUST BE A MANUFACTURED PROTECTION SYSTEM USED IN STRICT CONFORMANCE WITH MANUFACTURER'S INSTRUCTIONS, OR MUST BE A PROTECTION SYSTEM DESIGNED BY A REGISTERED PROFESSIONAL ENGINEER. THE

9. CONTRACTOR SHALL PROVIDE BOTH CONC. ANCHORS & CLAY DIKES AS REQUIRED BY THE ENGINEER AS FOLLOWS:

10%<SLOPE<15%: ONE EVERY 200 LINEAR FEET CLAY DIKES ONLY
15% OR GREATER SLOPES:
EVERY 100 LINEAR FEET-CONC. ANCHORS & CLAY DIKES.

A.) CLAY DIKES SHALL EXTEND FOR THE FULL TRENCH WIDTH (USED FOR PIPE BEDDING AND COVER) AND HAVE A LENGTH OF 5 FEET. LOCATED IN THE MIDDLE OF PIPE LENGTH, AT LEAST 2 FEET FROM A PIPE JOINT. MATERIALS SHALL BE CLAY AS DESIGNATED "CL" AND DEFINED UNDER THE UNIFIED SOIL CLASSIFICATION SYSTEM.

B.) CONC. ANCHORS SHALL BE LOCATED AT THE DOWNSTREAM SIDE OF JOINTS, SHALL BE UN-REINFORCED AND SHALL BE MINIMUM OF TRENCH WIDTH, 3 FEET HIGH (REPLACING PIPE BEDDING AND COVER) AND 2 FEET THICK.

10. LEVEL SURVEY & TOPOGRAPHIC MAPS USED FOR PLAN SHEETS ARE DATED FEB. 2006, CONDUCTED BY ASG/SURVEY DEPT. BUILDINGS AND ROADWAYS WERE UPDATED BY AERIAL PHOTOGRAPHY DURING AUGUST/SEPTEMBER 1990. LOCATIONS, BUILDING LOCATIONS, AND OTHER FEATURES MAY HAVE CHANGED SINCE THE LAST MAP UPDATE.

11. UTILITIES KNOWN TO EXIST BY THE ENGINEER FROM RESEARCH OF THE AVAILABLE RECORDS ARE SHOWN ON THE DRAWINGS. NO RESPONSIBILITY IS CLAIMED FOR COMPLETENESS OR ACCURACY. PRIOR TO STARTING CONSTRUCTION, VERIFY LOCATION AND ELEVATION OF ALL EXISTING UTILITIES WHICH MAY INTERFERE WITH THE FACILITIES INSTALLED UNDER THIS CONTRACT.

12. ELEVATIONS USED IN THE DRAWINGS ARE BASED ON 0.00 AT THE MEAN SEA LEVEL, HORIZONTAL COORDINATES ARE BASED ON THE AMERICAN SAMOA COORDINATE SYSTEM GRID.

13. PROVIDE, INSTALL, AND MAINTAIN SIGNS BARRICADES, MARKERS, CONES AND PROTECTIVE FACILITIES AND TAKE ALL NECESSARY PRECAUTIONS FOR THE PROTECTION, CONVENIENCE AND SAFETY OF THE PUBLIC DURING THE CONSTRUCTION OPERATIONS, CONFORM TO THE REQUIREMENTS OF THE DEPARTMENT OF PUBLIC SAFETY AND THE DEPARTMENT OF PUBLIC WORKS IN REGARD TO TRAFFIC SAFETY WHILE WORKING IN THE PUBLIC RIGHT-OF-WAY. ALL TRAFFIC CONTROL PLANS MUST BE APPROVED BY DPS AND PUBLIC WORKS PRIOR TO START OF CONSTRUCTION.

14. MAINTAIN TWO-WAY TRAFFIC ON HIGHWAY AT ALL TIMES UNLESS PRIOR PERMISSION TO CLOSE ONE LANE IS OBTAINED FROM THE DEPARTMENT OF PUBLIC SAFETY. IF THE LANE CLOSURE IS REQUIRED, PROPER ADVANCE NOTICE TO PUBLIC VIA NORMAL PUBLICATION OR RADIO ANNOUNCEMENTS IS REQUIRED.

15. KEEP THE WORK SITE AND SURROUNDING AREAS FREE FROM DUST NUISANCE. DUST CONTROL, SEDIMENTATION CONTROL, AND ALL SUCH PLANS MUST BE APPROVED BY THE AMERICAN SAMOA ENVIRONMENTAL PROTECTION AGENCY PRIOR TO START OF CONSTRUCTION.

16. REMOVE ALL SILT AND DEBRIS RESULTING FROM THE WORK AND DEPOSITED IN DRAINAGE FACILITIES, ROADWAYS, AND OTHER AREAS WHEN NECESSARY. CONSTRUCT SILT FENCES AND OTHER EROSION CONTROL DEVICES AROUND THE WORK TO PREVENT DAMAGE TO STREAMS OR OTHER WATERWAYS.

17. BARRICADE OPEN EXCAVATIONS AND POST WITH WARNING LIGHTS. KEEP UNATTENDED EXCAVATIONS FREE OF WATER AND MAINTAIN SLOPING AND STABLE WALLS WHEN OVER 4 FEET DEEP. LEAVE A LADDER OR OTHER DEVICE TO ALLOW ESCAPE FROM EXCAVATION. WHEN PERSONNEL ARE IN THE EXCAVATION, AT LEAST 2 MEANS OF EGRESS ARE REQUIRED. LADDERS ARE REQUIRED TO ALLOW NOT MORE THAN 25 FEET OF LATERAL TRAVEL FOR TRENCH EGRESS.

18. THE CONTRACTOR IS RESPONSIBLE FOR PROVIDING ALL NECESSARY EQUIPMENT AND MATERIALS FOR TESTING WATERLINES.

19. ROADS AND PROPERTIES AFFECTED BY EXCAVATION MUST BE REFURBISHED TO ORIGINAL STATUS OR BETTER AT COMPLETION OF PROJECT.

20. CONTRACTOR TO PROVIDE ELECTRONIC AS-BUILT DRAWINGS IN AUTODESK LAND DEVELOPMENT 2006 OR A RECENT VERSION THEREOF, OF ALL APPURTENANCES AND SURVEY REFERENCE POINTS TO ACCEPTABLE LOCATIONS. MINIMAL REQUIREMENT OF 2 POINTS FOR MINOR AND 3 POINTS FOR MAJOR APPURTANCES.

21. MAINTAIN WATER AND SEWER LINE SEPARATION IN ACCORDANCE WITH REGULATIONS.

22. INSTALL DETECTABLE WARNING TAPE AND CONDUCTOR TAPE ON TOP OF ALL PIPE.

23. ALL REBARS SHOULD BE EPOXY COATED. UNLESS DIRECTED BY ENGINEER

24. CONSTRUCT SWALES AS SHOWN IN DETAILS WHENEVER SLOPE EXCEEDS 8%.

No.	Description	Date

REV. NO.:
REVISION:
CHECKED BY:
APPROVED BY:
DATE:

PREPARED BY: F.Toala.
CHECKED BY: L.Tyrell
APPROVED BY: F.Aquila
ISSUE FOR: Construction

AMERICAN SAMOA POWER AUTHORITY
ENVIRONMENTAL SERVICES DIVISION
P.O.BOX PPB, TAFUNA, PAGO PAGO, AS 96799

PROJECT NAME: VAITOGI WATERLINE REPLACEMENT PROJECT
DRAWING TITLE: LEGEND UTILITY GENERAL NOTES
PROJECT LOCATION: VAITOGI VILLAGE, AMERICAN SAMOA

SCALE: NTS
PROJECT NO:
DATE: 7-2022
SHEET NO. G3
SIGNATURE:
DATE:

CONSTRUCTION NOTES:

1. THE CONTRACTOR SHALL COORDINATE HIS HAUL ROUTE STAGING AREA AND ALL ASSOCIATED REQUIREMENTS, SUCH AS, LAND USE PERMIT, WITH THE PNRS, CONTRACTING OFFICER, AND AFFECTED LANDOWNER.
2. A SEPARATE LAND USE PERMIT MUST BE OBTAINED BY THE CONTRACTOR IF THE CONTRACTOR'S STAGING AREA OR ANY WORK IS OUTSIDE THE LIMITS OF THE CONTRACT. THE EXISTING LAND USE PERMIT IS CONDITIONED ON A DIVISION OF MARINE AND WILDLIFE RESOURCES REVIEW PRIOR TO CONSTRUCTION.
3. THE CONTRACTOR SHALL BE RESPONSIBLE FOR THE CLEARING AND REMOVAL OF ALL SILT AND DEBRIS GENERATED BY HIS GRADING AND CONSTRUCTION WORK AND DEPOSITED AND ACCUMULATED ON ROADWAYS AND OTHER AREAS.
4. ALL EXISTING UTILITIES, CONCRETE WALKWAYS, STEPS AND WALLS, WHETHER OR NOT SHOWN ON THE DRAWINGS, EXCEPT THOSE DESIGNATED TO BE REMOVED, SHALL BE PROTECTED FROM DAMAGED AT ALL TIMES DURING CONSTRUCTION AND GRADING WORK. ANY DAMAGES TO THEM SHALL BE REPAIRED BY THE CONTRACTOR AT HIS EXPENSE.
5. THE CONTRACTOR SHALL VERIFY DIMENSIONS, LOCATIONS, ELEVATIONS, ETC. THAT ARE INDICATED FOR VERIFICATION AND INFORM THE CONTRACTING OFFICER IN WRITING OF ANY DIFFERENCES PRIOR TO INSTALLATION OF NEW FACILITIES.
6. THE CONTRACTOR SHALL TONE AND PROBE THE AREA PRIOR TO ALL EXCAVATION AND TRENCHING TO VERIFY THE LOCATION OF ALL EXISTING UTILITIES AND SHALL BE RESPONSIBLE FOR REPAIR OR REPLACEMENT OF SAME IN THE EVENT OF DAMAGES DUE TO CONTRACTORS CONSTRUCTION PRACTICES. WHENEVER CONNECTIONS OF NEW UTILITIES TO EXISTING UTILITIES ARE SHOWN ON THE PLANS, THE CONTRACTOR SHALL EXPOSE THE EXISTING LINES AT THE PROPOSED CONNECTIONS TO VERIFY THEIR LOCATIONS, DEPTHS AND ASSURE THAT CONNECTIONS CAN BE MADE PRIOR TO EXCAVATION FOR THE NEW LINES AT NO COST TO THE OWNER. ANY NECESSARY ADJUSTMENTS FOR THE NEW LINES TO ENSURE PROPER CONNECTIONS TO THE EXISTING SHALL BE THE CONTRACTOR'S RESPONSIBILITY. THE CONTRACTOR SHALL ALSO CONTACT ASPA, BLUESKY AND ASTCA TO PROPERLY LOCATE THE UNDERGROUND UTILITIES AND CABLES THAT LIE IN AND ADJACENT TO THE WORK AREA.
7. WORK SHALL BE DONE BETWEEN 7:30AM AND 4:00PM SAMOA STANDARD TIME. NO WORK SHALL BE DONE ON SATURDAYS, SUNDAYS, FEDERAL HOLIDAYS OR AFTER NORMAL WORK HOURS AT ANY TIME, WITHOUT SPECIAL ARRANGEMENT AND PRIOR APPROVAL BY THE CONTRACTING OFFICER. PROJECT WORK SHALL BE IN CONFORMANCE WITH APPLICABLE FEDERAL AND LOCAL LAWS AND REGULATIONS REGARDING COMMUNITY NOISE CONTROL.
8. THE CONTRACTOR SHALL BE RESPONSIBLE FOR THE PROTECTION OF ALL WATERLINES DURING CONSTRUCTION. THE CONTRACTOR SHALL BE ESPECIALLY CAREFUL WHEN EXCAVATING BEHIND WATERLINE TEES AND BENDS WHEREVER THERE IS POSSIBILITY OF WATERLINE MOVEMENT DUE TO REMOVAL OF THE SUPPORTING EARTH BEYOND THE EXISTING REACTION BLOCKS. THE CONTRACTOR SHALL TAKE WHATEVER MEASURE TO PROTECT THE WATERLINE SUCH AS CONSTRUCTING SPECIAL REACTION BLOCKS AND/OR MODIFYING HIS CONSTRUCTION METHODS.
9. NO BLASTING WILL BE ALLOWED ON THIS PROJECT.
10. THE CONTRACTOR SHALL PROTECT EXISTING PUBLIC AND PRIVATE FACILITIES AND UTILITIES, AND PROVIDE SHORING DURING EXCAVATION. THE CONTRACTOR SHALL REPAIR, AT HIS COST, ALL DAMAGES DUE TO EXCAVATION.
11. THE CONTRACTOR SHALL COORDINATE WITH ASPA, ASC, BLUESKY COMMUNICATIONS AND ASTCA FOR ALL NEW POLE INSTALLATION, POWER, TELEVISION AND COMMUNICATIONS RELOCATIONS, AND REMOVAL OF EXISTING POLES. IF THE CONTRACTOR SHALL PROVIDE RELOCATIONS, REMOVAL OF EXISTING POLES. THE CONTRACTOR SHALL PROVIDE SUPPORTS FOR THE EXISTING POLES AFFECTED BY EXCAVATION. THE CONTRACTOR SHALL NOTIFY AFFECTED VILLAGES AND THE UTILITY COMPANIES SEVEN (7) DAYS PRIOR TO SERVICE INTERRUPTIONS. THESE NOTIFICATIONS SHALL BE AT THE CONVENIENCE OF ASPA, ASC, BLUESKY COMMUNICATION AND ASTCA.
12. THE CONTRACTOR SHALL PROVIDE ALL LAND SURVEY CONSTRUCTION STAKEOUT SERVICES, SOIL AGGREGATE, CONCRETE AND PAVEMENT MONITORING, AND SAMPLING AND TESTING SERVICES.
13. WASTE MATERIAL WILL BE DISPOSED OF AT AN APPROVED, PNRS-COMPLIANT, OFF-SITE DISPOSAL AREA. THE CONTRACTOR SHALL BE RESPONSIBLE FOR OBTAINING DISPOSAL AREA.
14. THE CONTRACTOR SHALL TAKE EXTREME CARE IN PERFORMING WORK NEAR EXISTING CONCRETE ELECTRICAL/COMMUNICATION DUCTS. APPROPRIATE PROTECTION SHALL BE IMPLEMENTED AS REQUIRED TO PREVENT DAMAGE TO THIS LINE.
15. THE CONTRACTOR SHALL VERIFY, BASED ON THE SITE CONDITIONS AND CONTRACT BASELINE DATA, WITH OVERVIEW AND APPROVAL BY AN AUTHORIZED REPRESENTATIVE OF AMERICAN SAMOA POWER AUTHORITY, THE LOCATION OF ALL EXISTING POLES WHICH IMPACT THE CONSTRUCTION AND ULTIMATE USE OF THE PROPOSED ROAD.
16. THE CONTRACTOR SHALL VERIFY, BASED ON OVERVIEW AND APPROVAL BY AUTHORIZED REPRESENTATIVE OF AMERICAN SAMOA GOVERNMENT OFFICE OF COMMUNICATIONS, THE LOCATIONS AND DEPTH OF EXISTING UNDERGROUND TELEPHONE CABLES. RELOCATE EXISTING DIRECT BURIED CABLES WHICH IMPACT THE CONSTRUCTION AND FINAL USE OF THE PROPOSED ROAD. EITHER INTO A NEW TRENCH AWAY FROM THE ROAD OR IN PVC SCHEDULE80 SLEEVES THROUGH THE ROAD AT A MINIMUM DEPTH OF 3' BELOW FINISHED GRADE IF THE CABLES CANNOT BE RELOCATED. TO EXPOSE THE CABLE, THE CONTRACTOR SHALL TONE FOR THE CABLE AND HAND EXCAVATE THE CABLE TAKING CARE NOT TO DAMAGE THE JACKET AND INSULATION. BASIS OF BID SHALL BE 100 LINEAR FEET OF DIRECT BURIED CABLE.
17. THE CONTRACTOR SHALL REMOVE ALL EXISTING PAVEMENT AND CROSSING ALONG THE NEW ROADWAY. ALL DEMOLITION AND REMOVAL OF EXISTING PAVEMENT SHALL BE CONSIDERED INCIDENTAL TO ROADWAY CONSTRUCTION.
18. ALL TRAFFIC SIGN AND PAVEMENT MARKERS SHALL BE IN ACCORDANCE WITH THE MANUAL ON UNIFORM TRAFFIC CONTROL DEVICES (MUTCD) 2003 EDITION, AND ALL SUBSEQUENT AMENDMENTS AND ADDITIONS.
19. AT THE END OF THE WORKDAY OR AS SOON AS WORK IS COMPLETED, THE CONTRACTOR SHALL TAKE NECESSARY MEASURES TO ENSURE THAT PUBLIC TRAFFIC HAS SAFE PASSAGE AND THAT ALL OPEN HOLES ARE PROPERLY COVERED AND MAINTAINED DURING THE DURATION OF THE PROJECT.
20. IF THE CONTRACTOR UNCOVERS ANY CULTURAL REMAINS, DURING EXCAVATION WORK, THE CONTRACTOR SHALL STOP WORK IN THE AREA OF THE FINDINGS AND NOTIFY THE CONTRACTING OFFICER AND THE AMERICAN SAMOA GOVERNMENT (ASHPO AND ASPA)

No.	Description	Date

REV. NO.:
REVISION:
CHECKED BY:
APPROVED BY:
DATE:

PREPARED BY: F.Toala.
CHECKED BY: L.Tyrell
APPROVED BY: F.Aquila
ISSUE FOR: Construction

AMERICAN SAMOA POWER AUTHORITY
ENVIRONMENTAL SERVICES DIVISION
P.O.BOX PPB, TAFUNA, PAGO PAGO, AS 96799

PROJECT NAME: VAITOGI WATERLINE REPLACEMENT PROJECT
DRAWING TITLE: CONSTRUCTION NOTES
PROJECT LOCATION: VAITOGI VILLAGE, AMERICAN SAMOA

SCALE: NTS
PROJECT NO:
DATE: 7-2022
SHEET NO. G4
SIGNATURE:
DATE: