DESIGN & CONSTRUCTION PLANS FOR

ASBESTOS CEMENT PIPE REPLACEMENT AND WATER SYSTEM UPGRADE PAGO SITE

PAGO PAGO, TUTUILA ISLAND
AMERICAN SAMOA

Prepared by:

PRYZM CONSULTING

PREFINAL DESIGN - NOT FOR CONSTRUCTION

LOCATION PLAN

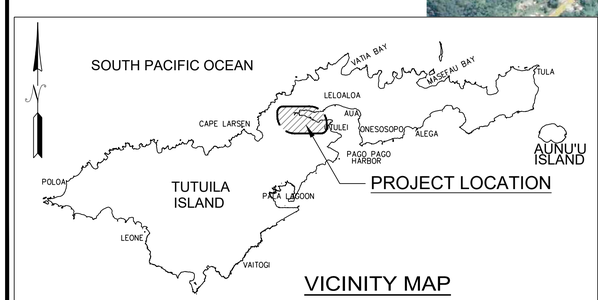

VICINITY MAP

INDEX TO DRAWINGS

SHEET NO.	DESCRIPTION
C001	TITLE SHEET
C002	GENERAL NOTES – 1
C003	GENERAL NOTES – 2
C004	GENERAL NOTES, ABBREVIATIONS & LEGEND
C005	GENERAL LAYOUT PLAN
C006	WATER SYSTEM LAYOUT PLAN – 1 & 2
C007	WATER SYSTEM LAYOUT PLAN – 3
C008	WL–A STA. 0+00 TO STA. 5+50
C009	WL–B STA. 0+00 TO STA. 5+00
C010	WL–B STA. 5+00 TO STA. 10+00
C011	WL–B STA. 10+00 TO STA. 15+00
C012	WL–B STA. 15+00 TO STA. 20+00
C013	WL–B STA. 20+00 TO STA. 25+00
C014	WL–B STA. 25+00 TO STA. 30+00
C015	WL–B STA. 30+00 TO STA. 32+05, WL–C 0+00 TO 0+35
C016	WL–D STA. 0+00 TO STA. 0+21
C017	FH PROFILE AND CONNECTION SCHEMATIC LAYOUT
C018	EROSION CONTROL NOTES
C019	EROSION CONTROL PLAN AND DETAILS
C020	MISCELLANEOUS DETAILS – 1
C021	MISCELLANEOUS DETAILS – 2
C022	MISCELLANEOUS DETAILS – 3
C023	MISCELLANEOUS DETAILS – 4
C024	STRIPING LAYOUT PLAN – 1
C025	STRIPING LAYOUT PLAN – 2
C026	PAVING LAYOUT PLAN
C027	TRAFFIC CONTROL PLAN – 1
C028	TRAFFIC CONTROL PLAN – 2
S–0	GENERAL NOTES
S–1	GENERAL PLAN & ELEVATION
S–2	TYPICAL SECTION AND DETAILS
S–3	CONNECTION DETAILS

THIS DOCUMENT IS RELEASED FOR THE PURPOSE OF REVIEW UNDER THE AUTHORITY OF GARY COOVER STATE OF HAWAII No. 5689-C IT IS NOT TO BE USED FOR CONSTRUCTION.

EXP DATE: 04/30/24

REVISION	BY	CHECKED BY	APR.	DATE

PREPARED BY:
CHECKED BY:
APPROVED BY:
ISSUE FOR:

ASPA
AMERICAN SAMOA POWER AUTHORITY

ASPA WATER ENGINEERING DIVISION
TAFUNA, AMERICAN SAMOA
P.O.BOX PPB, PAGO PAGO AM SAMOA 96799.
TEL(684) 699-1333, FAX (684) 699-4035

PROJECT: ASBESTOS CEMENT PIPE REPLACEMENT AND WATER SYSTEM UPGRADE PROJECT - PAGO SITE

DRAWING TITLE: TITLE SHEET

PROJECT LOCATION: PAGO PAGO, TUTUILA ISLAND AMERICAN SAMOA

SCALE: AS SHOWN

PROJECT NO: --

DATE: MAY 2023

SHEET NO. C001

GENERAL NOTES:

1. ALL COORDINATES ARE REFERRED TO USGS AMERICAN SAMOA DATUM OF 1962
2. HORIZONTAL CONTROL DATA WERE PROVIDED BY POB PROFESSIONAL SERVICES:

   HORIZONTAL CONTROLS ARE BASED ON THE FOLLOWING:

BP MAMALOA GAS	N 307388.24	E 253956.06	ELEVATION	4.82'
BP FOSTER GAS	N 308454.06	E 253797.10	ELEVATION	4.89'
BM NO 1	N 306550.29	E 259443.30	ELEVATION	9.68'
PIOA MTN OBST LIGHT	N 308481.16	E 268881.64	ELEVATION	1729.74'

3. LOCATIONS OF UNDERGROUND UTILITIES ARE BASED ON REFERENCED DRAWINGS OR VISIBLE FITTINGS, MANHOLES, PATCHED TRENCHES AND OTHER GROUND MARKINGS AND THEREFORE ARE APPROXIMATE. LOCATIONS AND INVERTS OF ALL EXISTING UTILITIES ARE APPROXIMATE. CONTRACTOR SHALL VERIFY ACTUAL LOCATION AND DEPTHS OF THE FACILITIES AND UTILITIES AND EXERCISE PROPER CARE IN EXCAVATING IN AND AROUND THE AREA. UNKNOWN OR UNVERIFIABLE UNDERGROUND UTILITIES AND OR STRUCTURES ARE NOT SHOWN ON THE DRAWINGS, BUT MAY BE ENCOUNTERED DURING EXCAVATION. THE CONTRACTOR SHALL NOT ASSUME THAT WHERE NO EXISTING UTILITIES ARE SHOWN, THAT NONE EXIST. THE CONTRACTOR SHALL BE RESPONSIBLE AND SHALL PAY FOR ALL DAMAGED UTILITIES.
4. ALL WORKS INVOLVING UTILITIES SHALL BE COORDINATED AND CLEARED WITH THE RESPECTIVE UTILITY AGENCIES PRIOR TO ANY EXCAVATION. IT IS THE CONTRACTOR'S RESPONSIBILITY TO OBTAIN ALL PERMITS AND CLEARANCES PRIOR TO CONSTRUCTION.
5. CONTRACTOR SHALL LOCATE ALL WATER AND SEWER LATERALS AND ENSURE THEY REMAIN IN SERVICE DURING CONSTRUCTION. CONTRACTOR SHALL REPLACE ANY DAMAGED SURFACES AND RELOCATE ANY LATERALS DUE TO CONFLICTS WITH THE WORK. MATERIALS FOR THE INSTALLATION OF WATER LATERALS SHALL BE IN ACCORDANCE WITH LOCAL SPECIFICATION STANDARDS AND REQUIREMENTS.
6. ALL BARRICADES, TEMPORARY CONSTRUCTION SIGNS, WARNING SIGNS, ETC. SHALL BE INSTALLED AND MANUFACTURED IN ACCORDANCE WITH THE "MANUAL ON UNIFORM TRAFFIC CONTROL DEVICES FOR STREETS & HIGHWAYS", LATEST EDITION.
7. CONTRACTOR AGREES THAT HE SHALL ASSUME SOLE AND COMPLETE RESPONSIBILITY FOR THE JOB SITE CONDITIONS DURING THE COURSE OF CONSTRUCTION OF THIS PROJECT INCLUDING SAFETY OF ALL PERSONS AND PROPERTY.THIS REQUIREMENT SHALL APPLY CONTINUOUSLY AND NOT BE LIMITED TO NORMAL WORKING HOURS. THE CONTRACTOR SHALL DEFEND, INDEMNIFY AND HOLD THE OWNER, GOVERNMENT, AND ENGINEER HARMLESS FROM ALL LIABILITY, REAL OR ALLEGED ARISING FROM THE SOLE NEGLIGENCE OF THE OWNER OR THE ENGINEER.
8. NO CONTRACTOR SHALL PERFORM ANY WORK OPERATIONS SO AS TO CAUSE FALLING ROCKS, SOIL OR DEBRIS IN ANY FORM TO FALL, SLIDE OR FLOW INTO EXISTING STATE DRAINAGE SYSTEMS, OR ADJOINING PROPERTIES, STREETS OR NATURAL WATERCOURSES. SHOULD SUCH VIOLATIONS OCCUR, THE CONTRACTOR MAY BE CITED AND THE CONTRACTOR SHALL IMMEDIATELY MAKE ALL REMEDIAL ACTIONS NECESSARY.
9. THE CONTRACTOR SHOULD VERIFY THE EXACT LOCATIONS OF EXISTING UNDERGROUND UTILITIES PRIOR TO CONSTRUCTION. THE CONTRACTOR SHALL BE RESPONSIBLE FOR THE REPAIR AND/OR REPLACEMENT OF ANY AND ALL DAMAGED UTILITIES OR ANY OTHER ADDITIONAL WORK REQUIRED TO INSTALL THE WATERLINE AT NO ADDITIONAL COST TO ASPA.
10. THE CONTRACTOR SHALL BE RESPONSIBLE AND BEAR THE COST OF ALL CONSTRUCTION SURVEYS INCLUDING BUT NOT LIMITED TO SURVEY CONTROLS AND TIE-DOWNS, WATERLINE CENTERLINE, AND SHALL HIRE LICENSED LAND SURVEYOR TO ASSIST HIM IN RELOCATING TEMPORARY BENCH MARKS SHOWN ON THE PLANS AND DISTURBED DURING CONSTRUCTION.
11. THE EXISTING WATERLINE AND SEWERLINE LOCATION IS BASED ON ASPA-PROVIDED SHAPE FILES. CONTRACTOR TO CONFIRM EXISTING CONDITIONS IN THE FIELD AND NOTIFY ENGINEER IF THEY VARY THAN WHAT IS SHOWN ON THE PLANS. THE CONTRACTOR SHOULD VERIFY THE EXACT LOCATIONS OF UNDERGROUND EXISTING UTILITIES PRIOR TO CONSTRUCTION.

WATER NOTES:

1. UNLESS OTHERWISE SPECIFIED, ALL MATERIALS AND CONSTRUCTION OF WATER SYSTEM FACILITIES AND APPURTENANCES SHALL BE IN ACCORDANCE WITH THE TEN STATE STANDARDS, AMERICAN SAMOA PRIMARY SAFE DRINKING WATER STANDARD SPECIFICATIONS, WASTEWATER POLLUTION CONTROL FEDERATION, AMERICAN SAMOA ENVIRONMENTAL PROTECTION AGENCY (ASEPA), AND/OR OTHER COMPARABLE STANDARDS.
2. THE CONTRACTOR SHALL NOTIFY THE AMERICAN SAMOA POWER AUTHORITY (ASPA) IN WRITING ONE WEEK PRIOR TO COMMENCING WORK ON THE WATER SYSTEM.
3. REQUEST FOR WATER OUTAGES SHALL BE SUBMITTED TO THE ASPA CONSTRUCTION INSPECTOR NOT LESS THAN FOURTEEN (14) CALENDAR DAYS IN ADVANCE. THE REQUEST SHALL INDICATE THE SPECIFIC AREA, DATE, TIME, AND THE ANTICIPATED DURATION OF THE OUTRAGE. OUTRAGES SHALL BE APPROVED AT THE CONVENIENCE OF ASPA. THE CONTRACTOR SHALL PLAN ALL WORK TO MINIMIZE THE NUMBER AND DURATION OF OUTAGES. ASPA SHALL PERFORM THE INITIAL NOTIFICATION OF AFFECTED CONSUMERS. HOWEVER, IF A SCHEDULE OUTAGE IS CANCELED FOR THE CONVENIENCE OF THE CONTRACTOR, THE CONTRACTOR SHALL IMMEDIATELY NOTIFY THE AFFECTED CONSUMERS OF THE CANCELLATION AND RE-NOTIFY THEM NOT LESS THAN ONE (1) AND NOT MORE THAN TWO (2) CALENDAR DAYS PRIOR TO THE RESCHEDULED OUTAGE. CONTRACTOR NOTIFICATIONS SHALL BE AT NO ADDITIONAL COST TO ASPA.
4. THE CONTRACTOR SHALL BE RESPONSIBLE FOR THE PROTECTION OF ALL WATER LINES DURING CONSTRUCTION. THE CONTRACTOR SHALL BE ESPECIALLY CAREFUL WHEN EXCAVATING BEHIND WATER LINES, TEES AND BENDS WHEREVER THERE IS A POSSIBILITY OF WATER LINE MOVEMENT DUE TO THE REMOVAL OF THE SUPPORTING EARTH BEYOND THE EXISTING REACTION BLOCKS. THE CONTRACTOR SHALL TAKE WHATEVER MEASURES NECESSARY TO PROTECT THE WATER LINES, SUCH AS CONSTRUCTING SPECIAL REACTION BLOCKS (WITH CONSTRUCTION MANAGER'S APPROVAL) AND/OR MODIFYING HIS CONSTRUCTION METHOD.
5. THE EXISTENCE AND LOCATION OF UNDERGROUND UTILITIES AND STRUCTURES AS SHOWN ON THE PLANS ARE FROM THE LATEST AVAILABLE DATA BUT IS NOT GUARANTEED AS TO THE ACCURACY OR THE ENCOUNTERING OF OTHER OBSTACLES DURING THE COURSE OF THE WORK. THE CONTRACTOR SHALL BE RESPONSIBLE AND SHALL PAY FOR ALL DAMAGES TO EXISTING UTILITIES. THE CONTRACTOR SHALL NOT ASSUME THAT WHERE NO UTILITIES ARE SHOWN, THAT NONE EXISTS.
6. THE CONTRACTOR SHALL BE SOLELY RESPONSIBLE FOR ALL ASSUMPTIONS, DEDUCTIONS, OR CONCLUSIONS HE/SHE MAY MAKE OR DERIVE FROM THE SUBSURFACE INFORMATION OR DATA FURNISHED ON THE PLANS. THE CONTRACTOR MUST SATISFY HIMSELF /HERSELF THROUGH HIS/HER OWN INVESTIGATIONS AS TO WHAT SUBSURFACE CONDITIONS ARE TO BE ENCOUNTERED.
7. ALL WATER MAIN TRENCHES SHALL BE BACKFILLED AS CALLED FOR IN THE PLANS AND SPECIFICATIONS. COMPACTION OF THE TRENCH BACKFILL SHALL MEET APPLICATION REQUIREMENTS OF "THE STANDARD SPECIFICATIONS FOR DEPARTMENT OF PUBLIC WORKS CONSTRUCTION", PROJECTS WITHIN STATE HIGHWAYS, AND ALL SUBSEQUENT AMENDMENTS, AND AS INDICATED IN THE CONTRACT DOCUMENTS.
8. THE CONTRACTOR SHALL BE RESPONSIBLE FOR THE PROPER DISPOSAL OF ALL EFFLUENT ASSOCIATED WITH THE CONSTRUCTION ACTIVITY, INCLUDING DEWATERING, DISINFECTION AND HYDROTESTING OPERATIONS, TO SAFEGUARD PUBLIC HEALTH AND SAFETY IN ACCORDANCE WITH APPLICABLE DEPARTMENT OF HEALTH REQUIREMENTS. ALL PERMITS AND LICENSES FOR CONSTRUCTION WATER DISPOSAL, INCLUDING ALL APPLICATIONS, CHARGES, FEES AND TAXES, ARE THE RESPONSIBILITY OF THE CONTRACTOR.
9. ALL WATER MAINS AND APPURTENANCES SHALL BE SUBJECTED TO HYDROSTATIC TEST PRESSURE OF 150PSI BY THE CONTRACTOR IN ACCORDANCE WITH TEN STATE STANDARDS, PIPE PRESSURE TEST OF THE WATER SYSTEM. DURING THE 30 MINUTE PRESSURE TEST, AND AFTER THE PRESSURE HAS STABILIZED, THE PRESSURE SHALL NOT DROP MORE THAN 10PSI.
10. THE NEW WATER MAIN SHALL BE COMPLETED IN PHASES IN THE NUMERICAL SEQUENCE SHOWN ON THE PLANS. THE CONTRACTOR SHALL COMPLETE EACH PHASE, INCLUDING INSTALLATION AND TESTING OF THE WATER MAIN, TRANSFER OF SERVICES AND FINAL PAVING OF THE STREET AND SIDEWALKS PRIOR TO BEGINNING THE NEXT PHASE
11. ALL AIR RELIEF VALVES SHALL HAVE A MINIMUM WORKING PRESSURE RANGE OF 0 TO 150PSI.
12. THE USE OF CORROSION RESISTANT COATED COR-TEN® T-BOLTS AND NUTS FOR UNDERGROUND MECHANICAL JOINT INSTALLATIONS SHALL BE ALLOWED IN LIEU OF TYPE 316 STAINLESS STEEL BOLTS AND NUTS.
13. FOR NEW OR EXISTING STREETS IN ROAD RIGHT-OF-WAY, ALL SERVICE LATERALS INSTALLED UNDER PAVEMENT AREAS SHALL HAVE A 36-INCH MINIMUM COVER AND ALL SERVICE LATERALS INSTALLED UNDER EXISTING SIDEWALK, CURB AND GUTTER AREAS SHALL HAVE 18-INCH MINIMUM COVER.
14. ALL SERVICE LATERAL RECONNECTIONS TO EXISTING SERVICES SHALL BE MADE AT THE CUSTOMER'S PROPERTY VALVE.

WATER NOTES: CON'T

15. ALL SECTIONS OF THE WATER MAIN REQUIRING REINFORCED CONCRETE JACKETING SHALL BE DUCTILE IRON PIPE CLASS 53 WITH DUCTILE IRON FITTINGS.
16. CLEANING SHALL BE BY THE USE OF "PIGS" INTRODUCED INTO THE PIPELINE AND RUN COMPLETELY THROUGH ALL INSTALLED PIPELINES AND ALL BRANCH LINES FOR FIRE HYDRANTS. "PIGGING" OF SERVICE LATERALS IS NOT REQUIRED. BARE FOAM "PIGS" SHALL BE USED TO SWAB PIPING CLEAN AS EACH LENGTH OF PIPELINE IS INSTALLED. EACH "PIG" SHALL CONSIST OF A CYLINDRICAL PIECE OF POLYURETHANE FOAM WITH DENSITY OF 3-7 POUNDS PER CUBIC FOOT AND A VINYL-COATED NOSE. OUTSIDE DIAMETER OF THE "PIG" SHALL BE EQUAL TO 1-1/4 TO 1-1/2 TIMES THE INSIDE DIAMETER OF THE PIPE BEING INSTALLED. THE LENGTH OF THE "PIG" SHALL BE 1-1/2 TO 2 TIMES ITS DIAMETER. PRIOR TO USE, THE "PIG" SHALL BE SUBMERGED IN A CHLORINE SOLUTION OF 1 OZ. OF 5% CHLORINE BLEACH IN 5 GALLONS OF WATER. "PIGGING" OF THE PIPELINE SHALL BE CONSIDERED INCIDENTAL TO THE INSTALLATION OF THE NEW PIPELINE.
17. THE CONTRACTOR SHALL COORDINATE THE SECURING OF THE EXISTING WATER SYSTEM WITH THE CONSTRUCTION MANAGER PRIOR TO EXCAVATING BEHIND OR REMOVING ANY EXISTING THRUST BLOCKS, STRUCTURAL STRUTS OR REACTION BEAMS, OR ANY FITTINGS SUCH AS TEES, PLUGS, CAPS, BENDS, OFFSETS, AND VALVES, OR ANY OTHER PIPELINE APPURTENANCE. THE CONTRACTOR SHALL BE RESPONSIBLE FOR ALL ASSOCIATED DAMAGES RESULTING FROM FAILURE TO ADEQUATELY SECURE THE EXISTING SYSTEM.
18. ALL DUCTILE IRON VALVES AND METALLIC FITTINGS SHALL BE WRAPPED WITH TWO LAYERS OF 8 MIL POLYETHYLENE WRAP. NO BENDING OF PVC PIPES SHALL BE PERMITTED. THE INSTALLATION OF PVC PIPE, ACCORDING TO THE PLANS AND SPECIFICATIONS AS BID ON BY THE CONTRACTOR, MAY REQUIRE ADDITIONAL DESIGN WORK, ADDITIONAL FITTINGS AND SPECIAL COUPLINGS, AND SHALL BE CONSIDERED INCIDENTAL TO THE UNIT PRICE BID IN THE PROPOSAL FOR PVC PIPE, ANY ADDITIONAL DESIGN WORK SHALL BE THE RESPONSIBILITY OF THE CONTRACTOR. COPPER TONING WIRE (No. 8 GA) SHALL BE INSTALLED ALONG THE CENTERLINE OF THE ENTIRE LENGTH OF THE PIPELINE AT 2'-6" MAXIMUM FROM THE FINISH GRADE.
19. BOSSED TEES REQUIRED FOR ALL LATERALS AND ARV CONNECTIONS TO PVC MAINS.
20. TWO-WAY BLUE REFLECTIVE HYDRANT MARKERS TYPE DB SHALL BE INSTALLED AT ALL NEW FIRE HYDRANT INSTALLATIONS.
21. INSTALL 4 MIL THICK, NON-METALLIC, BLUE COLORED, 6 INCHES WIDE WARNING TAPE OVER CENTERLINE OF THE PIPE AND BELOW THE BASE COURSE ALONG THE ENTIRE LENGTH OF TRENCH. TAPE SHOULD BE MARKED WITH "CAUTION WATER LINE BURIED BELOW"
22. THE CONTRACTOR SHALL CUT AND PLUG ALL EXISTING UNUSED LATERALS AT THE MAIN WHETHER OR NOT SHOWN ON THE PLANS. METER AND VALVE BOXES TO BE OR ALREADY ABANDONED SHALL BE DEMOLISHED OR REMOVED AND PROPERLY DISPOSED OF. THE DAMAGED AREA SHALL BE REPAIRED TO AN EQUAL OR BETTER CONDITION THAN THE SURROUNDING AREA. ALL WORK SHALL BE DONE AT THE EXPENSE OF THE CONTRACTOR.
23. AT THE ELECTRICAL/SIGNAL DUCTLINE WATER CROSSINGS, ADJUST ALL ELECTRICAL/SIGNAL DUCTLINE ELEVATIONS TO MAINTAIN 6" VERTICAL CLEAR SEPARATION FROM ALL WATERLINES (12" CLEAR FOR ALL ELECTRICAL/SIGNAL DUCTLINE STRUCTURES LARGER THAN 16") AT NO COST TO THE CONSTRUCTION MANAGER.
24. MAINTAIN 3'-0" MIN. HORIZONTAL CLEAR SEPARATION BETWEEN ALL WATERLINE SYSTEMS AND NEAREST ELECTRICAL/SIGNAL DUCTLINES PARALLELING THE WATER SYSTEM AT NO COST TO THE CONSTRUCTION MANAGER.
25. MAINTAIN 3'-0" MIN. HORIZONTAL CLEAR SEPARATION BETWEEN STREET LIGHT/TRAFFIC SIGNAL, STANDARDS (INCLUDING ANY MODULAR UNITS) AND THE NEAREST WATER SYSTEM. CONTRACTOR SHALL FIELD VERIFY FOR ANY CONFLICTS AT EACH STREET LIGHT / TRAFFIC SIGNAL STANDARD LOCATION. WHERE CONFLICTS OCCUR, THE CONTRACTOR SHALL COORDINATE WITH THE CONSTRUCTION MANAGER TO REVISE THE STREET LIGHT/ TRAFFIC SIGNAL STANDARD TO PROVIDE THE REQUIRED CLEARANCES AT NO COST TO THE CONSTRUCTION MANAGER.
26. THE CONTRACTOR SHALL VERIFY ALL EXISTING AND NON-EXISTING WATER SERVICE CONNECTIONS NOT SHOWN ON THE PLANS TO THE VARIOUS ESTABLISHMENTS AND HOUSING FACILITIES AND SHALL BE PROVIDED WITH NEW CONNECTIONS TO THE NEW WATER MAIN.
27. CONTRACTOR SHALL FOLLOW ALL APPLICABLE OSHA, FEDERAL AND AMERICAN SAMOA GOVERNMENT REGULATIONS IN HANDLING AND DISPOSAL OF THE REMOVED ASBESTOS CEMENT MATERIALS. DISPOSAL OF THE PIPE SHALL BE AT AN APPROVED ASBESTOS MATERIAL DISPOSAL SITE.
28. ALL POLYVINYL CHLORIDE (PVC) PIPES SHALL CONFORM TO AWWA C909 DR14 AND SHALL BE USED WITH DUCTILE IRON (DI) FITTINGS CLASS 53. PVC FITTINGS INCLUDING DEFLECTION COUPLINGS ARE NOT ALLOWED.THE EXTERIOR OF ALL DUCTILE IRON PIPES SHALL BE COATED WITH 100% SOLIDS EPOXY OR 100% SOLIDS POLYURETHANE.
29. ALL POLYVINYL CHLORIDE (PVC) PIPE FOR TEMPORARY BYPASS AND ISOLATION SPOOL OF CORROSION PROTECTION SHALL CONFORM TO AWWA C909 DR14 AND SHALL BE USED WITH DUCTILE IRON (DI) FITTINGS. PVC FITTINGS INCLUDING DEFLECTION COUPLING ARE NOT ALLOWED.

CONSTRUCTION NOTES

1. ALL APPLICABLE CONSTRUCTION WORK SHALL BE DONE IN ACCORDANCE WITH THE STANDARD SPECIFICATIONS FOR ROADS AND DRAINAGE FOR THE DEPARTMENT OF PUBLIC WORKS, AS-DPW. THE AMERICAN SAMOA POWER AUTHORITY SHALL BE CONTACTED FOR ALL WATER, SEWER AND ELECTRICAL WORK.
2. THE UNDERGROUND PIPES, CABLES OR DUCTLINES KNOWN TO EXIST BY THE ENGINEER FROM HIS SEARCH OF RECORDS ARE INDICATED ON THE PLANS. THE CONTRACTOR SHALL VERIFY THE LOCATIONS AND DEPTHS OF THE FACILITIES AND EXERCISE PROPER CARE IN EXCAVATING IN THE AREA. WHEREVER CONNECTIONS OF NEW UTILITIES TO EXISTING UTILITIES ARE SHOWN ON THE PLANS, THE CONTRACTOR SHALL EXPOSE THE EXISTING LINES AT THE PROPOSED CONNECTIONS TO VERIFY THEIR LOCATIONS AND DEPTHS PRIOR TO EXCAVATION FOR THE NEW LINES.
3. IF CONTRACTOR ENCOUNTERS DRAINS TRAVERSING UNDER THE SIDEWALK FROM THE PROPERTY TO CURB FACE, THE CONTRACTOR SHALL NOTIFY THE PROPERTY OWNER AND MUST EITHER HAVE ONE OR MUST OBTAIN A DRAIN CONNECTION LICENSE BEFORE DRAIN CONNECTION CAN BE RESTORED.
4. NO CONTRACTOR SHALL PERFORM ANY CONSTRUCTION OPERATION SO AS TO CAUSE FALLING ROCKS, SOIL OR DEBRIS IN ANY FORM TO FALL, SLIDE OR FLOW INTO EXISTING DRAINAGE SYSTEMS, OR ADJOINING PROPERTIES, STREETS OR NATURAL WATERCOURSES. SHOULD SUCH VIOLATIONS OCCUR, THE CONTRACTOR MAY BE CITED AND THE CONTRACTOR SHALL IMMEDIATELY MAKE ALL REMEDIAL ACTIONS NECESSARY.
5. THE CONTRACTOR SHALL SUBMIT AN EROSION AND SEDIMENTATION CONTROL PLAN TO AMERICAN SAMOA GOVERNMENT (ASG) ENVIRONMENTAL PROTECTION AGENCY (EPA) AND IS RESPONSIBLE FOR CONFORMANCE WITH THE APPLICABLE PROVISIONS OF THE WATER QUALITY AND WATER POLLUTION CONTROL STANDARDS CONTAINED IN AMERICAN SAMOA GOVERNMENT (ASG) ENVIRONMENTAL PROTECTION AGENCY EARTHMOVING REGULATIONS 1996 AND THE INITIAL ENVIRONMENTAL ASSESSMENT SUBMITTED IN ACCORDANCE WITH THE ENVIRONMENTAL IMPACT ASSESSMENT REGULATIONS 1995. BEST MANAGEMENT PRACTICES SHALL BE EMPLOYED AT ALL TIMES DURING CONSTRUCTION. CONTRACTOR IS RESPONSIBLE FOR OBTAINING GOVERNMENT OR LOCAL AUTHORIZATIONS AS REQUIRED BY LAW.
6. THE CONTRACTOR SHALL NOTIFY ASPA TO ARRANGE FOR INSPECTIONAL SERVICES AND SUBMIT (2) SETS OF APPROVED CONSTRUCTION PLANS SEVEN (7) DAYS PRIOR TO COMMENCEMENT OF CONSTRUCTION WORK.
7. THE CONTRACTOR SHALL SUBMIT SHOP DRAWINGS TO ASPA FOR REVIEW AND APPROVAL.
8. THE CONTRACTOR SHALL VERIFY AND CHECK ALL DIMENSIONS AND DETAILS SHOWN ON THE DRAWINGS PRIOR TO THE START OF CONSTRUCTION.ANY DISCREPANCY SHALL BE BROUGHT IMMEDIATELY TO THE ATTENTION OF THE ASPA PROJECT ENGINEER FOR CLARIFICATION.
9. THE CONTRACTOR SHALL VERIFY THE LOCATIONS AND DEPTHS OF THE FACILITIES AND EXERCISE PROPER CARE IN EXCAVATING THE AREA. WHEREVER CONNECTIONS OF NEW UTILITIES TO EXISTING UTILITIES ARE SHOWN ON THE PLANS, THE CONTRACTOR SHALL EXPOSE THE EXISTING LINES AT THE PROPOSED CONNECTIONS TO VERIFY THEIR LOCATIONS AND DEPTHS PRIOR TO EXCAVATION FOR THE NEW LINES. THE CONTRACTOR SHALL BE RESPONSIBLE AND SHALL PAY FOR ALL DAMAGED UTILITIES.
10. WHENEVER CROSSINGS OF NEW UTILITIES AND EXISTING UTILITIES AND CONNECTIONS OF NEW UTILITIES ARE SHOWN, THE CONTRACTOR SHALL EXPOSE THE EXISTING LINES AT THE PROPOSED CROSSINGS AND CONNECTIONS TO VERIFY THEIR LOCATIONS AND DEPTHS PRIOR TO EXCAVATION FOR THE NEW LINES. IF UTILITIES NOT SHOWN ARE ENCOUNTERED, OR IF POTENTIAL UTILITY CONFLICTS ARISE WHICH MAY PREVENT THE INSTALLATION OF THE WATER LINES IN ACCORDANCE WITH THE GRADES AND CLEARANCES SHOWN ON THE PLANS, NOTIFY ASPA PROJECT ENGINEER IMMEDIATELY. THE CONTRACTOR SHALL PROVIDE STRUCTURAL SUPPORT FOR ALL EXISTING UTILITY LINES UNCOVERED IN THE TRENCHES.

CONSTRUCTION NOTES: CON'T

11. THE CONTRACTOR SHALL OBSERVE AND COMPLY WITH ALL APPLICABLE FEDERAL AMERICAN SAMOA GOVERNMENT, AND LOCAL LAWS REQUIRED FOR THE PROTECTION OF PUBLIC HEALTH, SAFETY AND ENVIRONMENTAL QUALITY.
12. THE CONTRACTOR SHALL REMOVE ALL SILT AND DEBRIS RESULTING FROM HIS WORK DEPOSITED IN DRAINAGE FACILITIES, ROADWAYS AND OTHER AREAS. THE COSTS INCURRED FOR ANY NECESSARY REMEDIAL ACTION BY THE ASPA PROJECT ENGINEER OR GOVERNMENT SHALL BE PAYABLE BY THE CONTRACTOR.
13. THE CONTRACTOR SHALL BE RESPONSIBLE FOR DAMAGE TO ANY GOVERNMENT UTILITY SYSTEM RESULTING FROM HIS OPERATIONS; ANY DAMAGE SHALL BE REPORTED IMMEDIATELY TO THE ASPA PROJECT ENGINEER, AND SHALL BE PAYABLE BY THE CONTRACTOR.
14. EXISTING UTILITIES SHALL REMAIN IN SERVICE AND IN-PLACE, IF RELOCATION OF EXISTING UTILITIES IS REQUIRED FOR THE CONTRACTOR'S CONVENIENCE, INTERRUPTION OF SERVICE SHALL BE KEPT TO A MINIMUM AND SHALL BE DONE AT THE CONTRACTOR'S EXPENSE AND ONLY WITH THE APPROVAL OF THE ASPA PROJECT ENGINEER.
15. THE CONTRACTOR SHALL BE RESPONSIBLE FOR PROPERLY SHORING, SHEETING, AND BRACING THE EXCAVATION AND STABILIZING THE EXISTING GROUND TO RENDER IT SAFE AND SECURE FROM POSSIBLE SLIDES, CAVE-INS AND SETTLEMENT AND FOR PROPERLY SUPPORTING EXISTING STRUCTURES AND FACILITIES WITH BEAMS, STRUTS OR UNDERPINNING TO FULLY PROTECT THEM FROM DAMAGE. THE CONTRACTOR SHALL PROVIDE AN EXCAVATION SHORING PLAN PREPARED AND STAMPED BY LICENSED PROFESSIONAL ENGINEER COMPETENT IN SOILS AND A LICENSED STRUCTURAL ENGINEER WHEN REQUIRED PER OCCUPATIONAL SAFETY AND HEALTH ADMINISTRATION (OSHA) STANDARDS.
16. THE CONTRACTOR SHALL PROVIDE SAFE ACCESS TO AND FROM ALL DRIVEWAYS AND STREETS.
17. THE CONTRACTOR SHALL RESTORE TO THEIR ORIGINAL CONDITION ALL IMPROVEMENTS DAMAGED AS A RESULT OF THE CONSTRUCTION. INCLUDING BUT NOT LIMITED TO PAVEMENTS, EMBANKMENTS, CONCRETE SIDEWALKS, CURBS AND GUTTERS, SIGNS, LANDSCAPING, STRUCTURES, UTILITIES, WALLS, FENCES, ETC. NEW FENCES, WALLS, ETC. TO BE MATCHED TO THE EXISTING INCLUDING FINISHING
18. THE CONTRACTOR SHALL PLAN OPERATION TO MINIMIZE THE AMOUNT OF EXCAVATED TRENCHES LEFT OPEN AT THE END OF EACH WORK DAY. OPEN TRENCHES SHALL BE COVERED WITH NON-SKID STEEL PLATES CAPABLE OF CARRYING H-20 VEHICLES IN TRAFFIC AREAS, AND 300 POUNDS PER SQUARE FOOT IN NON-TRAFFIC AREAS. PROVIDE ANCHORING OF THE PLATES IN NON-TRAFFIC AREAS. PROVIDE BARRICADES TO DELINEATE COVERED TRENCHES IN NON-TRAFFIC AREAS AND ALL STOCK/SPOIL PILES.
19. ALL WORKS SHALL BE RESTRICTED TO THE HOURS BETWEEN 7:30 AM TO 4:00 PM UNLESS APPROVED BY THE ASPA PROJECT ENGINEER. A MINIMUM OF 7-DAY WRITTEN NOTICE SHALL BE GIVEN BY THE CONTRACTOR TO ASPA REQUESTING APPROVAL FOR ANY AND ALL WORK OUTSIDE OF THE 7:30 AM TO 4:00 PM WORK HOURS – APPROVAL MUST BE GRANTED BEFORE WORK CAN PROCEED OUTSIDE OF THE NORMAL 7:30 AM TO 4:00 PM WORK HOURS.
20. UTILITY CUT-OVERS AND INTERRUPTIONS SHALL TAKE PLACE ONLY AFTER NORMAL WORKING HOURS OR ON SATURDAYS, SUNDAYS, AND GOVERNMENT HOLIDAYS. WITH PRIOR APPROVAL FROM ASPA PROJECT ENGINEER.
21. WHEREVER EXISTING FENCE IS REMOVED, PROVIDE CHAIN LINK FENCE AS NECESSARY TO SECURE PROTECTED AREAS PRIOR TO THE END OF EACH WORK DAY. TRENCHES CROSSING ANY FENCE, EXISTING OR NEW, SHALL NOT BE LEFT OPEN DURING NON-WORKING HOURS. BACKFILL A MINIMUM OF 10 FEET ON EACH SIDE OF FENCE AT THE END OF WORK DAY. OTHER MEASURES MAY BE UTILIZED AS APPROVED BY THE ASPA PROJECT ENGINEER.
22. CONTRACTOR SHALL TAKE ALL NECESSARY MEASURES TO PREVENT DAMAGE TO EXISTING UTILITY LINES. CONTRACTORS SHALL BE EQUIPPED TO HANDLE ANY EMERGENCY INCLUDING BUT NOT LIMITED TO HAVING THE AVAILABLE REPAIR CLAMPS, PIPE FITTING, AND PIPING. CONTRACTOR SHALL NOT RELY ON THE AVAILABILITY OF THE GOVERNMENT FORCES TO HANDLE THE EMERGENCY.
23. EXISTING WATERLINE LOCATIONS ARE APPROXIMATE. CONTRACTOR SHALL COORDINATE LOCATING EXISTING UTILITIES WITH OWNERS OF UTILITY LINES PRIOR TO EXCAVATION WITH APPROPRIATE ADVANCE NOTIFICATION.
24. CONTRACTOR IS RESPONSIBLE FOR MEETING CONDITIONS OF PNRS PERMIT OBTAINED FOR PROJECTS.
25. FOR CONFLICT BETWEEN DRAWINGS AND SPECIFICATIONS, PNRS PERMIT REQUIREMENTS AND CONDITIONS SHALL APPLY.
26. CONTRACTOR MUST CONFORM WITH ALL REQUIREMENTS OF THE OSHA STANDARD FOR EXCAVATION SAFETY (29 CFR 1926 SUBPART P). INCLUDED AMONG THE OSHA STANDARDS IS A REQUIREMENT FOR PROTECTION OF WORKERS IN EXCAVATION 5 FEET OR GREATER IN DEPTH. PROTECTIVE SYSTEMS CAN BE SLOPING/BENCHING OF EXCAVATION WALLS, OR INSTALLATION OF SUPPORT/SHIELDING DEVICES. DESIGN OF PROTECTIVE SYSTEMS MUST BE BASED ON FIELD CLASSIFICATION OF THE SOIL BY A COMPETENT PERSON. PROTECTIVE SYSTEMS MUST BE IN ACCORDANCE WITH THE TABLES AND FIGURES SHOWN IN THE OSHA STANDARDS, OR MUST BE A MANUFACTURED PROTECTION SYSTEM USED IN STRICT CONFORMANCE WITH THE MANUFACTURER'S INSTRUCTIONS, OR MUST BE A PROTECTION SYSTEM DESIGNED BY A REGISTERED PROFESSIONAL ENGINEER. THE CONTRACTOR SHOULD STUDY THE OSHA STANDARD FOR FURTHER DETAIL.
27. PROVIDE, INSTALL AND MAINTAIN SIGNS BARRICADES, MARKERS, CONES AND PROTECTIVE FACILITIES AND TAKE ALL NECESSARY PRECAUTIONS FOR THE PROTECTION, CONVENIENCE AND SAFETY OF THE PUBLIC DURING THE CONSTRUCTION OPERATIONS, CONFORM TO THE REQUIREMENTS OF THE DEPARTMENTS OF PUBLIC SAFETY AND PUBLIC WORKS IN REGARD TO TRAFFIC SAFETY WHILE WORKING IN THE PUBLIC RIGHT-OF-WAY.
28. MAINTAIN TWO-WAY TRAFFIC ON HIGHWAY AT ALL TIMES UNLESS PRIOR PERMISSION TO CLOSE ONE LANE IS OBTAINED FROM THE DEPARTMENT OF PUBLIC SAFETY. IF LANE CLOSURE IS REQUIRED, PROPER ADVANCE NOTICE TO THE PUBLIC VIA NORMAL PUBLICATIONS OR RADIO ANNOUNCEMENT IS REQUIRED.
29. KEEP THE WORK SITE AND SURROUNDING AREAS FREE FROM DUST NUISANCE.
30. REMOVE ALL SILT AND DEBRIS RESULTING FROM THE WORK AND DEPOSITED IN DRAINAGE FACILITIES, ROADWAYS AND OTHER AREAS WHEN NECESSARY. CONSTRUCT SILT FENCES AND OTHER EROSION CONTROL DEVICES AROUND THE WORK TO PREVENT DAMAGE TO STREAMS OR OTHER WATERWAYS.
31. BARRICADE OPEN EXCAVATIONS AND POST WITH WARNING LIGHTS. KEEP UNATTENDED EXCAVATIONS FREE OF WATER AND MAINTAIN SLOPING AND STABLE WALLS WHEN OVER 4 FEET DEEP. LEAVE A LADDER OR OTHER DEVICE TO ALLOW ESCAPE FROM EXCAVATION. WHEN PERSONNEL ARE IN THE EXCAVATION, AT LEAST 2 MEANS OF EGRESS ARE REQUIRED, WITH LADDERS PROVIDED TO REQUIRE NOT MORE THAN 25 FEET OF LATERAL TRAVEL.
32. THE CONTRACTOR SHALL BE RESPONSIBLE FOR THE REMOVAL AND DISPOSAL OF ABANDONED UTILITIES AND SHALL COORDINATE THIS WORK WITH THE OWNER OF THE UTILITY WITH APPROPRIATE ADVANCE NOTIFICATION.
33. IN THE CASE OF HARD ROCK, OTHER ABNORMAL SURFACE CONDITIONS, AND ANY OTHER UNFORESEEN CONDITIONS NOT MENTIONED IN THE CONTRACT AND SPECIFICATION DOCUMENTS, THE CONTRACTOR SHALL IMMEDIATELY NOTIFY ASPA PROJECT ENGINEER TO DISCUSS THE CONTRACTOR'S MEANS AND METHODS OF APPROACH SET BY ASPA ENGINEERING SERVICES DIVISION. NO SEPARATE PAYMENT FOR THIS WORK WILL BE MADE; COMPENSATION FOR SUCH WORK SHALL BE DEEMED INCIDENTAL TO THE PROJECT WORKS
34. FILL MATERIALS MUST NOT HAVE ANY ROCK OVER 3" IN SIZE AND MUST BE FREE OF ANY TRASH OR DEBRIS AND ROOTS THAT MIGHT DAMAGE PIPES

BEST MANAGEMENT PRACTICES NOTES:

1. MEASURES TO CONTROL EROSION AND OTHER POLLUTANTS SUCH AS TEMPORARY STORMDRAIN PROTECTION SHALL BE IN PLACE BEFORE ANY TRENCHING WORK IS INITIATED. THESE MEASURES SHALL BE PROPERLY CONSTRUCTED AND MAINTAINED THROUGHOUT THE CONSTRUCTION PERIOD.
2. ALL CONTROL MEASURES SHALL BE CHECKED AND REPAIRED AS NECESSARY.
3. ALL TEMPORARY EROSION CONTROL MEASURES SHALL BE REMOVED BY THE CONTRACTOR AFTER COMPLETION OF THE PROJECT PRIOR TO FINAL ACCEPTANCE OR AS DIRECTED BY THE ENGINEER IN THE FIELD.
4. GOOD HOUSEKEEPING SHALL BE UTILIZED TO ENSURE PROTECTION OF ROADWAYS FROM MUD, DIRT AND DEBRIS.
5. PREVENT OR REDUCE THE DISCHARGE OF POLLUTANTS FROM PAVING OPERATIONS, USING MEASURES TO PREVENT RUN-ON OR RUNOFF POLLUTION, PROPERLY DISPOSING OF WATER, & TRAINING EMPLOYEES & SUBCONTRACTORS.
6. PREVENT OR REDUCE THE DISCHARGE OF POLLUTANTS TO STORM WATER FROM LEAKS & SPILLS BY REDUCING THE CHANCE FOR SPILLS, STOPPING THE SOURCE OF SPILLS, CONTAINING AND CLEANING UP SPILLS, PROPERLY DISPOSING OF SPILL MATERIALS, AND TRAINING EMPLOYEES.
7. PREVENT OR REDUCE THE DISCHARGE OF POLLUTANTS TO STORM WATER FROM SANITARY SEPTIC WASTE BY PROVIDING CONVENIENT WELL MAINTAINED FACILITIES & ARRANGING FOR REGULAR SERVICES & DISPOSAL.
8. PREVENT OR REDUCE THE DISCHARGE OF POLLUTANTS TO STORM WATER FROM DEWATERING OPERATIONS BY USING SEDIMENT CONTROLS & BY TESTING THE GROUNDWATER FOR POLLUTION.

WATERWAY STANDARD BMP NOTES:

THE FOLLOWING MEASURES (AS APPLICABLE) SHALL BE INCORPORATED INTO PROJECTS TO MINIMIZE THE DEGRADATION OF WATER QUALITY AND IMPACTS TO FISH AND WILDLIFE RESOURCES:

1. TURBIDITY AND SILTATION FROM PROJECT-RELATED WORK SHALL BE MINIMIZED AND CONTAINED TO THE IMMEDIATE VICINITY OF THE PROJECT THROUGH THE APPROPRIATE USE OF EFFECTIVE SILT CONTAINMENT DEVICES AND THE CURTAILMENT OF WORK DURING ADVERSE TIDAL AND WEATHER CONDITIONS.
2. THE WORK SHALL BE CONDUCTED IN THE DRY SEASON OR WHEN ANY AFFECTED STREAM HAS MINIMAL OR NO FLOW, TO THE EXTENT PRACTICABLE. THE WORK SHALL BE DISCONTINUED DURING FLOODING, INTENSE RAINFALL, STORM SURGE, OR HIGH SURF CONDITIONS WHERE RUNOFF AND TURBIDITY CANNOT BE CONTROLLED. SHORELINE WORK WILL BE DONE DURING LOW TIDES AS MUCH AS POSSIBLE.
3. DREDGING/FILLING IN THE MARINE/AQUATIC ENVIRONMENT SHALL BE SCHEDULED TO AVOID CORAL SPAWNING AND RECRUITMENT PERIODS.
4. DREDGING AND FILLING IN THE MARINE/AQUATIC ENVIRONMENT SHALL BE DESIGNED TO AVOID OR MINIMIZE THE LOSS OF SPECIAL AQUATIC SITES (CORAL REEFS, WETLANDS, RIFFLE-POOL COMPLEXES, ETC.) AND COMPENSATORY MITIGATION SHALL BE IMPLEMENTED FOR THE UNAVOIDABLE LOSS OF SPECIAL AQUATIC SITES.
5. ALL PROJECT-RELATED MATERIALS AND EQUIPMENT (DREDGES, BARGES, BACKHOLES ETC.) TO BE PLACED IN THE WATER SHALL BE CLEANED OF POLLUTANT PRIOR TO USE.
6. NO PROJECT-RELATED MATERIALS (FILL, REVETMENT ROCK, PIPE ETC.) SHALL BE STOCKPILE IN THE WATER (INTERTIDAL ZONES, REEF FLATS, STREAM CHANNELS, WETLANDS ETC.)
7. ALL DEBRIS REMOVED FROM THE MARINE/AQUATIC ENVIRONMENT SHALL BE DISPOSED OF AT AN APPROVED UPLAND OR OCEAN DUMPING SITES.
8. NO CONTAMINATION (TRASH OR DEBRIS DISPOSAL, ALIEN SPECIES INTRODUCTIONS, ETC.) OF ADJACENT MARINE/AQUATIC ENVIRONMENTS (REEF FLATS, CHANNELS, OPEN OCEAN, STREAM CHANNELS, WETLANDS, ETC.) SHALL RESULT FROM PROJECT-RELATED ACTIVITIES.
9. FUELING OF PROJECT RELATED VEHICLES AND EQUIPMENT SHALL TAKE PLACE AWAY FROM THE WATER AND A CONTINGENCY PLAN TO CONTROL PETROLEUM PRODUCTS ACCIDENTALLY SPILLED DURING THE PROJECT SHALL BE DEVELOPED. ABSORBENT PADS AND CONTAINMENT BOOMS SHALL BE STORED ON-SITE, IF APPROPRIATE, FACILITATE THE CLEAN-UP OF ACCIDENTAL PETROLEUM RELEASES.
10. ANY UNDER-LAYER FILLS USED IN THE PROJECT SHALL BE PROTECTED FROM EROSION WITH THE SUITABLE MATERIAL (SUCH AS PRECAST CONCRETE ARMOR OR MAT UNITS) AS SOON AFTER PLACEMENT AS PRACTICABLE.
11. ANY SOIL EXPOSED NEAR WATER AS PART OF THE PROJECT SHALL BE PROTECTED FROM EROSION (WITH SUITABLE MATERIAL SUCH AS PLASTIC SHEETING, FILTER FABRIC ETC.) AFTER EXPOSURE AND STABILIZED AS SOON AS PRACTICABLE (WITH VEGETATION MATTING, HYDROSEEDING ETC.)
12. SILT FENCES, SILT CURTAINS, OR OTHER DIVERSION OR CONTAINMENT STRUCTURES SHALL BE INSTALLED TO CONTAIN SEDIMENT AND TURBIDITY AT THE WORK SITE (A) PARALLEL TO AND WITHIN 10 FEET OF THE TOE OF ANY FILL, OR SOIL EXPOSED WITHIN 25 FEET OF A STANDING OR FLOWING WATERBODY. IF THE FILL SITE HAS A DOWNSLOPE OR SURFACE CONNECTION TO THE WATERBODY; AND (B) ADJACENT TO ANY FILL PLACED OR SOIL EXPOSED WITHIN A STANDING OR FLOWING WATERBODY. ALL SILT FENCES, CURTAINS, AND OTHER STRUCTURES SHALL BE INSTALLED PROPERLY AND MAINTAINED IN A FUNCTIONING MANNER FOR THE LIFE OF THE CONSTRUCTION PERIOD WHERE FILL MATERIAL AND EXPOSED SOILS MIGHT CAUSE TRANSPORT OF SEDIMENT OR TURBIDITY BEYOND THE IMMEDIATE CONSTRUCTION SITE.

DEPARTMENT OF PUBLIC WORKS (DPW) PUBLIC TRANSIT DIVISION (PTD) NOTE:

THIS PROJECT WILL AFFECT BUS OPERATIONS, BUS ROUTES, BUS STOPS, AND PARA-TRANSIT OPERATIONS. AT LEAST TWO (2) WEEKS PRIOR TO CONSTRUCTION, THE CONTRACTOR SHALL PROVIDE NOTIFICATION OF THE SCOPE OF WORK, LOCATION, DETOUR, PROPOSED CLOSURE OF ANY STREET, TRAFFIC LANE, SIDEWALK, OR BUS STOP AND DURATION OF PROJECT TO:

TRANSIT DIVISION
DEPARTMENT OF PUBLIC WORKS
AMERICAN SAMOA GOVERNMENT
+1 (684) 699-5357/5367
info@dolaride.as

EROSION & TEMPORARY DUST CONTROL:

1. DURING CONSTRUCTION, PREVENTATIVE MEASURES SHALL BE USED TO CONTROL FORESEEABLE DUST, EROSION OR SEDIMENTATION PROBLEMS WHICH MAY ARISE AS THE JOB PROGRESSES.
2. FUGITIVE DUST AND SOLID WASTE DISPOSAL DURING CONSTRUCTION ACTIVITIES SHALL MEET REQUIREMENTS OF ASPA SOLID WASTE MANAGEMENT CONTROL.
3. THE CONTRACTOR, AT HIS OWN EXPENSE, SHALL KEEP THE PROJECT AREA AND SURROUNDING AREA FREE FROM DUST NUISANCE. THE WORK SHALL BE IN CONFORMANCE WITH THE AIR POLLUTION CONTROL STANDARDS AND REGULATIONS OF THE AMERICAN SAMOA DEPARTMENT OF HEALTH.
4. THE FINAL LIFT OF EACH DAY'S WORK SHALL BE COMPACTED TO PREVENT EROSION OF FILL MATERIAL.
5. ANY DIRT OR GRASSED AREA DISTURBED SHALL BE RESTORED BY SEEDED HYDROMULCH. THE GRASS MUST BE FULLY ESTABLISHED AT COMPLETION OF PROJECT.

SEWER NOTES

1. THE UNDERGROUND PIPES, CABLES OR DUCT LINES KNOWN TO EXIST BY THE ENGINEER FROM HIS RESEARCH OF RECORDS ARE INDICATED ON THE PLANS. THE CONTRACTOR SHALL VERIFY THE LOCATION AND DEPTH OF THE FACILITIES, INCLUDING AND AFFECTING SEWER LINES IN THE PRESENCE OF THE ASPA WASTEWATER INSPECTOR AND EXERCISE PROPER CARE IN EXCAVATING THE AREA. THE CONTRACTOR SHALL BE RESPONSIBLE AND SHALL PAY FOR ALL DAMAGED UTILITIES.
2. THE CONTRACTOR SHALL BE RESPONSIBLE FOR MAINTAINING CONTINUOUS SEWER SERVICE TO ALL AFFECTED AREAS DURING CONSTRUCTION.
3. THE CONTRACTOR SHALL BE RESPONSIBLE FOR ANY SEWAGE SPILLS CAUSED DURING CONSTRUCTION. THE CONTRACTOR SHALL NOTIFY THE AMERICAN SAMOA DEPARTMENT OF HEALTH AND AS-EPA AND UTILIZE APPROPRIATE SAMPLING AND ANALYZING PROCEDURES. THE CONTRACTOR SHALL BE RESPONSIBLE FOR ALL PUBLIC NOTIFICATIONS AND PRESS RELEASES.

SEWER NOTES

4. THE CONTRACTOR SHALL BE RESPONSIBLE FOR DAMAGE TO ANY GOVERNMENT UTILITY SYSTEM RESULTING FROM CONSTRUCTION OPERATIONS; ANY DAMAGE SHALL BE REPORTED IMMEDIATELY TO ASPA PROJECT ENGINEER AND/OR APPROPRIATE GOVERNMENT REPRESENTATIVE. ANY SEWER REPAIR PERFORMED BY THE CONTRACTOR SHALL BE INSPECTED BY ASPA WASTEWATER MANAGER PRIOR TO BACKFILLING.
5. THE CONTRACTOR SHALL BE RESPONSIBLE FOR REGULATORY FINES OR PENALTIES THAT MAY BE IMPOSED BY ENVIRONMENTAL REGULATORY AGENCIES (AS-EPA AND/OR AS-DOH) IN THE EVENT OF SEWAGE OVERFLOW OR SPILL RESULTING FROM CONSTRUCTION OPERATIONS.
6. THE CONTRACTOR SHALL REIMBURSE ASPA PROJECT ENGINEER FOR ANY EMERGENCY RESPONSE EFFORT THAT MAY BE REQUIRED BY OUTSIDE OR GOVERNMENT FORCES TO MITIGATE THE ADVERSE EFFECTS OF ANY SEWAGE OVERFLOW OR SPILL RESULTING FROM THE CONTRACTOR'S OPERATIONS.
7. POTENTIALLY LETHAL LEVELS OF HYDROGEN SULFIDE (H_2S) GAS MAY DEVELOP IN THE GRAVITY SEWER COLLECTION SYSTEM.
8. CONSTRUCTION DEWATERING INTO THE SEWER COLLECTION SYSTEM IS PROHIBITED.
9. THE CONTRACTOR SHALL BE RESPONSIBLE FOR MAINTAINING CONTINUOUS SEWER SERVICE TO ALL AFFECTED AREAS DURING CONSTRUCTION.
10. ADJUST ALL UTILITY VALVE BOX FRAMES & COVERS, WATER METER BOXES, MANHOLE FRAMES & COVERS, STREET MONUMENT COVERS, ETC., TO NEW FINISH GRADE. COORDINATE WITH PRIVATE COMPANIES AND ASG AGENCIES FOR WORK ON EACH RESPECTIVE UTILITY.
11. CONFINED SPACE FOR ENTRY BY PERSONNEL, INCLUDING INSPECTORS, INTO A PERMIT-REQUIRED CONFINED SPACE AS DEFINED IN 29 CFR PART 1910.146(b), THE CONTRACTOR SHALL BE RESPONSIBLE FOR PROVIDING:

    A. ALL SAFETY EQUIPMENT REQUIRED BY THE CONFINED SPACE REGULATIONS APPLICABLE TO ALL PARTIES OTHER THAN THE CONSTRUCTION INDUSTRY, TO INCLUDE, BUT NOT LIMITED TO, THE FOLLOWING:

    A. FULL BODY HARNESSES FOR UP TO TWO PERSONNEL.
    B. LIFELINE AND ASSOCIATED CLIPS.
    C. INGRESS/EGRESS AND FALL PROTECTION EQUIPMENT.
    D. TWO-WAY RADIOS (WALKIE-TALKIES) IF OUT OF LINE-OF-SIGHT.
    E. EMERGENCY (ESCAPE) RESPIRATOR (10 MINUTE DURATION).
    F. CELLULAR TELEPHONE TO CALL FOR EMERGENCY ASSISTANCE.
    G. CONTINUOUS GAS DETECTOR (CALIBRATED) TO MEASURE OXYGEN, HYDROGEN SULFIDE, CARBON MONOXIDE AND FLAMMABLES (CAPABLE OF MONITORING AT A DISTANCE AT LEAST 20-FEET AWAY).
    H. PERSONAL MULTI-GAS DETECTOR TO BE CARRIED BY INSPECTOR.

    II. CONTINUOUS FORCED AIR VENTILATION ADEQUATE TO PROVIDE SAFE ENTRY CONDITIONS.

    III. ONE ATTENDANT/RESCUE PERSONNEL TOPSIDE (TWO, IF CONDITIONS WARRANT IT).

12. LOCATIONS AND DIMENSIONS OF EXISTING RIGHT-OF-WAY AND EASEMENTS ARE BASED ON THE BEST AVAILABLE INFORMATION. THE CONTRACTOR SHALL VERIFY ALL THE LIMITS OF RIGHT-OF-WAY AND EASEMENT IN ORDER TO AVOID ENCROACHMENTS.
13. THE CONTRACTOR SHALL REPLACE, BUT NOT LIMITED TO, PAVING, STABILIZED EARTH, DRIVEWAYS OR ANY ITEMS DISTURBED OR DAMAGED BY THE CONSTRUCTION OR IT'S RELATED ACTIVITIES. THE CONTRACTOR SHALL REPLACE WITH EQUAL MATERIAL OR AS DIRECTED BY ASPA.
14. THE DISPOSAL OF ANY EXCESS EARTHWORK MATERIAL SHALL BE THE RESPONSIBILITY OF THE CONTRACTOR.
15. IT IS THE CONTRACTORS RESPONSIBILITY TO COORDINATE HIS WORK WITH THE WORK SCHEDULE OF ADJACENT CONTRACTORS AS WELL AS THE STAFF OF ASPA.
16. WHERE MINIMUM SEPARATION BETWEEN UTILITIES IS REQUIRED, THE DISTANCE SHALL BE MEASURED FROM OUTSIDE OF PIPE TO OUTSIDE OF PIPE.
17. IN AREAS WHERE CONSTRUCTION ACTIVITIES RESTRICT NORMAL ACCESS TO PROPERTIES, THE CONTRACTOR SHALL PROVIDE AND MAINTAIN ALTERNATE ROUTES, WHICH ARE SUBJECT TO APPROVAL BY THE ASPA ENGINEERING SERVICES DIVISION.
18. ALL PRACTICAL AND NECESSARY EFFORT SHALL BE TAKEN DURING CONSTRUCTION TO PREVENT TREE REMOVAL.
19. THE CONTRACTOR SHALL SUBMIT TO ASPA WASTEWATER ENGINEERING DIVISION 3 EACH MYLAR "AS-BUILT" TRACINGS AND 3-EACH DUPLICATE CDS WITH ELECTRONIC AUTO-CAD FILES OF THE CONSTRUCTION PLANS AS ACTUALLY CONSTRUCTED, SHOWING FROM THE ORIGINAL PLANS.
20. PIPE MEASUREMENT SHALL BE FROM CENTER OF FITTINGS OR VALVES, UNLESS OTHERWISE NOTED.
21. ALL EXCAVATIONS SHALL BE BACKFILLED AT THE END OF EACH WORK DAY.
22. ALL BURIED UTILITY PIPE TO BE ABANDONED IN PLACE SHALL BE CUT, PLUGGED AND FILLED WITH FLOWABLE FILL.
23. IF UNANTICIPATED CONDITIONS ARE ENCOUNTERED DURING THE COURSE OF THE CONSTRUCTION AND ARE BEYOND THE SCOPE OF THE DESIGN, THE ENGINEER WILL SUBMIT THE NECESSARY REVISED OR SUPPLEMENTAL IMPROVEMENT PLANS FOR REVIEW AND APPROVAL BY ASPA WASTEWATER DEPARTMENT.
24. THE CONTRACTOR SHALL NOT REMOVE AND/OR RELOCATE ANY FENCE POST OR PIPE WITHIN THE LIMITS OF THE CONSTRUCTION UNLESS SPECIFICALLY DIRECTED TO DO SO BY THE ASPA ENGINEER.
25. SEWERS SHALL BE LAID AT LEAST 3 FEET, HORIZONTALLY, FROM ANY EXISTING OR PROPOSED WATER MAIN. WHEN CONDITIONS PREVENT A LATERAL SEPARATION OF 3 FEET, A SEWER MAY BE LAID CLOSER THAN 3 FEET TO THE WATER MAIN UNDER THE FOLLOWING CONDITION:

    A. IT IS LAID IN A SEPARATE TRENCH OR IT IS LAID IN THE SAME TRENCH WITH THE WATER MAIN LOCATED TO ONE SIDE ON A BENCH OF UNDISTURBED EARTH.
    B. THE ELEVATION OF THE TOP (CROWN) OF THE SEWER IS AT LEAST 6 INCHES BELOW THE BOTTOM (INVERT) OF THE WATER MAIN.
    C. OTHER ALTERNATIVES SUCH AS A CONCRETE JACKET SHALL BE CONSIDERED.

26. WATER LATERALS AND WATER METER BOXES SHOULD NOT BE PLACED OVER OR NEAR SEWER LATERALS. WATER VALVES, AIR RELEASE VALVES, BENDS AND CONCRETE BLOCKS, FIRE HYDRANTS, ETC. SHOULD NOT BE PLACED OVER OR NEAR SEWER LINES AND LATERALS.
27. WHENEVER A SEWER LINE VERTICALLY CROSSES WATER MAINS, THE SEWER LINE MUST BE JACKETED WITH REINFORCED CONCRETE FOR A MINIMUM OF 5 FEET ON BOTH SIDES OF THE POINT OF CROSSING IF THE SEWER IS ABOVE THE WATER MAIN AND FOR 3 FEET ON BOTH SIDES IF THE SEWER IS BELOW THE WATER MAIN. HOWEVER, JACKETING MAY BE ELIMINATED IF THE SEWER LINE IS BELOW THE WATER MAIN AND THE SEPARATION IS GREATER THAN 18 INCHES AND STRUCTURAL REQUIREMENTS ARE MET.

AMERICAN SAMOA POWER AUTHORITY (ASPA) NOTES:

1. LOCATION OF ASPA FACILITIES

   THE LOCATION OF ASPA'S OVERHEAD AND UNDERGROUND FACILITIES SHOWN ON THE PLANS ARE FROM EXISTING RECORDS WITH VARYING DEGREES OF ACCURACY AND ARE NOT GUARANTEED AS SHOWN. THE CONTRACTOR SHALL VERIFY IN THE FIELD THE LOCATIONS OF THE FACILITIES AND SHALL EXERCISE PROPER CARE IN EXCAVATING AND WORKING IN THE AREA. WHEREVER CONNECTIONS OF NEW UTILITIES TO EXISTING UTILITIES AND UTILITY CROSSINGS ARE SHOWN, THE CONTRACTOR SHALL EXPOSE THE EXISTING LINES AT THE PROPOSED CONNECTIONS AND CROSSINGS TO VERIFY THE DEPTHS PRIOR TO EXCAVATION FOR THE NEW LINES. THE CONTRACTOR SHALL BE RESPONSIBLE FOR ANY DAMAGES TO ASPA'S FACILITIES WHETHER SHOWN OR NOT SHOWN ON THE PLANS.

2. COMPLIANCE WITH AMERICAN SAMOA OCCUPATIONAL SAFETY AND HEALTH LAWS

   THE CONTRACTOR SHALL COMPLY WITH THE AMERICAN SAMOA'S OCCUPATIONAL SAFETY AND HEALTH LAWS AND REGULATIONS, INCLUDING WITHOUT LIMITATION, THOSE RELATED TO WORKING ON OR NEAR EXPOSED OR ENERGIZED ELECTRICAL LINES AND EQUIPMENT.

AMERICAN SAMOA POWER AUTHORITY (ASPA) NOTES: CON'T.

3. EXCAVATION CLEARANCE

   THE CONTRACTOR SHALL OBTAIN AN EXCAVATION CLEARANCE FROM ASPA PLANNING AND DESIGN SECTION OF THE COSTUMER INSTALLATIONS DEPARTMENT AT TEL. 699-1234 A MINIMUM OF TEN (10) WORKING DAYS PRIOR TO STARTING CONSTRUCTION.

4. CAUTION!!! ELECTRICAL HAZARD!!!

   EXISTING ASPA OVERHEAD AND UNDERGROUND LINES ARE ENERGIZED AND WILL REMAIN ENERGIZED DURING CONSTRUCTION UNLESS PRIOR SPECIAL ARRANGEMENTS HAVE BEEN MADE WITH ASPA. ONLY ASPA PERSONNEL ARE TO HANDLE THESE ENERGIZED LINES AND ERECT TEMPORARY GUARDS TO PROTECT THESE LINES FROM DAMAGE. THE CONTRACTOR SHALL WORK CAUTIOUSLY AT ALL TIMES TO AVOID ACCIDENTS AND DAMAGE TO EXISTING ASPA FACILITIES, WHICH CAN RESULT IN ELECTROCUTION.

5. OVERHEAD LINES

   AMERICAN SAMOA LAW REQUIRES THAT A WORKER AND THE LONGEST OBJECT HE OR SHE MAY CONTACT CANNOT COME CLOSER THAN A SPECIFIED MINIMUM RADIAL CLEARANCE WHEN WORKING CLOSE TO OR UNDER ANY OVERHEAD LINES. IT IS THE CONTRACTOR'S RESPONSIBILITY TO BE INFORMED OF AND COMPLY WITH THE LAW.

   AT ANY TIME SHOULD THE CONTRACTOR ANTICIPATE THAT HIS WORK WILL RESULT IN THE NEED TO ENCROACH WITHIN THE MINIMUM REQUIRED CLEARANCE AS STATED IN THE LAW, THE CONTRACTOR SHALL NOTIFY ASPA AT LEAST FOUR (4) WEEKS PRIOR TO THE PLANNED ENCROACHMENT SO THAT, IF FEASIBLE, THE NECESSARY PROTECTIONS (E.G. RELOCATE OR DE-ENERGIZE ASPA LINES) CAN BE INVESTIGATED. ASPA MAY ALSO BE ABLE TO BLANKET ITS DISTRIBUTION (12KV AND BELOW) LINES TO PROVIDE A VISUAL AID IN PREVENTING ACCIDENTAL CONTACT. ASPA'S COST OF SAFEGUARDING OR IDENTIFYING ITS LINES WILL BE CHARGED TO THE CONTRACTOR.

   CONTACT ASPA CUSTOMER SERVICE PH. 699-1234 FOR ASSISTANCE IN IDENTIFYING AND SAFEGUARDING OVERHEAD POWER LINES.

6. POLE BRACING

   A MINIMUM CLEARANCE OF 10 FEET MUST BE MAINTAINED WHEN EXCAVATING AROUND UTILITY POLES AND/OR THEIR ANCHOR SYSTEM TO PREVENT WEAKENING OR POLE SUPPORT FAILURE. SHOULD WORK REQUIRE EXCAVATING WITHIN 10 FEET OF A POLE AND/OR ITS ANCHOR SYSTEM, THE CONTRACTOR SHALL PROTECT, SUPPORT, SECURE, AND TAKE ALL OTHER PRECAUTIONS TO PREVENT DAMAGE TO OR LEANING OF THESE POLES. THE CONTRACTOR IS RESPONSIBLE FOR ALL POLE BRACING DESIGNS AND STRUCTURAL CALCULATIONS, AS WELL AS THE ASSOCIATED COSTS TO BRACE, REPAIR, OR STRAIGHTEN POLES. ALL MEANS OF STRUCTURAL SUPPORT FOR THE POLE AND/OR ANCHOR SYSTEM PROPOSED BY THE THE CONTRACTOR SHALL BE SUBMITTED TO ASPA'S CUSTOMER SERVICE PH. 699-1234 FOR REVIEW A MINIMUM OF TEN (10) WORKING DAYS PRIOR TO IMPLEMENTATION.THE COST OF ASPA'S REVIEW/ASSISTANCE IN PROVIDING PROPER SUPPORT AND PROTECTION OF ITS POLES WILL BE CHARGED TO THE CONTRACTOR.

7. UNDERGROUND LINES

   THE CONTRACTOR SHALL EXERCISE EXTREME CAUTION WHENEVER CONSTRUCTION CROSSES OR IS IN CLOSE PROXIMITY OF UNDERGROUND LINES.ASPA'S EXISTING ELECTRICAL CABLES ARE ENERGIZED AND WILL REMAIN ENERGIZED DURING CONSTRUCTION. ONLY ASPA PERSONNEL ARE TO BREAK INTO EXISTING ASPA FACILITIES, HANDLE THESE CABLES, AND ERECT TEMPORARY GUARDS TO PROTECT THESE CABLES FROM DAMAGE. THE COST OF ASPA'S ASSISTANCE IN PROVIDING PROPER SUPPORT AND PROTECTION OF ITS UNDERGROUND LINES WILL BE CHARGED TO THE CONTRACTOR.FOR ASSISTANCE/COORDINATION IN PROVIDING PROPER SUPPORT AND PROTECTION OF THESE LINES, THE CONTRACTOR SHALL CALL A MINIMUM OF TEN (10) WORKING DAYS IN ADVANCE.

   SPECIAL PRECAUTIONS ARE REQUIRED WHEN EXCAVATING NEAR ASPA'S 138KV UNDERGROUND LINES (SEE ASPA INSTRUCTIONS TO CONSULTANTS/CONTRACTORS ON "EXCAVATION NEAR ASPA'S UNDERGROUND 138KV LINES" FOR DETAILED REQUIREMENTS).

   FOR VERIFICATION OF UNDERGROUND LINES, THE CONTRACTOR SHALL CALL THE ASPA CUSTOMER SERVICE (PHONE 699-1234) MINIMUM OF FIVE (5) WORKING DAYS IN ADVANCE.

8. UNDERGROUND FUEL PIPELINES

   THE CONTRACTOR SHALL EXERCISE EXTREME CAUTION WHENEVER CONSTRUCTION CROSSES OR IS IN CLOSE PROXIMITY OF ASPA'S UNDERGROUND FUEL OIL PIPELINES. SPECIAL PRECAUTIONS ARE REQUIRED WHEN EXCAVATING NEAR ASPA'S UNDERGROUND FUEL OIL PIPELINES (SEE ASPA'S SPECIFIC FUEL PIPELINE "GUIDELINES" TO CONSULTANTS/CONTRACTORS ON EXCAVATION NEAR ASPA'S UNDERGROUND FUEL PIPELINES FOR DETAILED REQUIREMENTS).

9. EXCAVATIONS

   WHEN TRENCH EXCAVATION IS ADJACENT TO OR BENEATH ASPA'S EXISTING STRUCTURES OR FACILITIES, THE CONTRACTOR IS RESPONSIBLE FOR:

   A. ARRANGING FOR ASPA STANDBY PERSONNEL TO OBSERVE WORK AT CONTRACTOR'S COST
   B. SHEETING, BRACING, OR OTHERWISE SUPPORTING THE EXCAVATION AND STABILIZING THE EXISTING GROUND TO RENDER ITS SAFE AND SECURE AND TO PREVENT POSSIBLE SLIDES, CAVE-INS, AND SETTLEMENTS.
   C. PROPERLY SUPPORTING EXISTING STRUCTURES OR FACILITIES WITH BEAMS, STRUTS, UNDER-PINNINGS, OR OTHER NECESSARY METHODS TO FULLY PROTECT IT FROM DAMAGE.
   D. BACKFILLING WITH PROPER BACKFILL MATERIAL INCLUDING SPECIAL THERMAL BACKFILL WHERE EXISTING (REFER TO ENGINEERING DEPARTMENT FOR THERMAL BACKFILL SPECIFICATIONS).

10. RELOCATION OF ASPA FACILITIES

    ANY WORK REQUIRED TO RELOCATE OR MODIFY ASPA FACILITIES SHALL BE DONE BY ASPA, OR BY THE CONTRACTOR UNDER ASPA'S SUPERVISION. THE CONTRACTOR SHALL BE RESPONSIBLE FOR ALL COORDINATION, AND SHALL PROVIDE NECESSARY SUPPORT FOR ASPA'S WORK, WHICH MAY INCLUDE, BUT NOT BE LIMITED TO, STALKING OF POLE/ANCHOR LOCATIONS, IDENTIFYING RIGHT OF WAY AND PROPERTY LINES, EXCAVATION AND BACKFILL, PERMITS AND TRAFFIC CONTROL, BARRICADING, AND RESTORATION OF PAVEMENT, SIDEWALKS, AND OTHER FACILITIES.

    ALL COSTS ASSOCIATED WITH ANY RELOCATION OR MODIFICATION (EITHER TEMPORARY OR PERMANENT) FOR THE CONVENIENCE OF THE CONTRACTOR, OR TO ENABLE THE CONTRACTOR TO PERFORM HIS WORK IN A SAFE AND EXPEDITIOUS MANNER IN FULFILLING HIS CONTRACT OBLIGATIONS SHALL BE BORNE BY THE CONTRACTOR.

11. CONFLICTS

    ANY REDESIGN OR RELOCATION OF ASPA'S FACILITIES NOT SHOWN ON THE PLANS MAY BE CAUSE FOR LENGTH DELAYS. THE CONTRACTOR ACKNOWLEDGES THAT ASPA IS NOT RESPONSIBLE FOR ANY DELAY OR DAMAGE THAT MAY ARISE AS A RESULT OF ANY CONFLICTS DISCOVERED OR IDENTIFIED WITH RESPECT TO THE LOCATION OR CONSTRUCTION OF ASPA'S ELECTRICAL FACILITIES IN THE FIELD, REGARDLESS OF WHETHER THE CONTRACTOR HAS MET THE REQUESTED MINIMUM ADVANCE NOTICES. IN ORDER TO MINIMIZE ANY DELAY OR IMPACT ARISING FROM SUCH CONFLICTS, ASPA SHOULD BE NOTIFIED IMMEDIATELY UPON DISCOVERY OR IDENTIFICATION OF SUCH CONFLICT.

12. DAMAGE TO ASPA FACILITIES

    THE CONTRACTOR SHALL BE RESPONSIBLE FOR THE PROTECTION OF ALLASPA SURFACE AND SUBSURFACE UTILITIES AND SHALL BE RESPONSIBLE FOR ANY DAMAGES TO ASPA'S FACILITIES AS A RESULT OF HIS OPERATIONS. THE CONTRACTOR SHALL IMMEDIATELY REPORT SUCH DAMAGES OR ANY HAZARDOUS CONDITIONS RELATED TO ASPA'S LINES TO ASPA'S TROUBLE DISPATCHER AT CUSTOMER SERVICE (PHONE 699-1234). REPAIR WORK SHALL BE DONE BY ASPA OR BY THE CONTRACTOR UNDER ASPA'S SUPERVISION. COSTS FOR DAMAGES TO ASPA'S FACILITIES SHALL BE BORNE BY THE CONTRACTOR.

    IN CASE OF DAMAGE OR SUSPECTED DAMAGE TO ASPA'S FUEL PIPELINE, THE CONTRACTOR SHALL IMMEDIATELY NOTIFY ASPA CUSTOMER SERVICE PH. 699-1234 (A 24-HOUR NUMBER) SO ASPA PERSONNEL CAN SECURE THE DAMAGED SECTION AND REPORT ANY OIL SPILLS THE THE PROPER AUTHORITIES.

13. ASPA STAND-BY PERSONNEL

    THE CONTRACTOR MAY REQUESTASPA TO PROVIDE AN INSPECTOR TO STAND-BY DURING CONSTRUCTION NEAR ASPA'S FACILITIES. THE COST OF SUCH INSPECTION WILL BE CHARGED TO THE CONTRACTOR.

AMERICAN SAMOA POWER AUTHORITY (ASPA) NOTES: CON'T.

THE CONTRACTOR SHALL CALL ASPA CUSTOMER SERVICE PH. 699-1234, A MINIMUM OF FIVE (5) WORKING DAYS IN ADVANCE TO ARRANGE FOR ASPA STAND-BY PERSONNEL.

14. CLEARANCES

    THE FOLLOWING CLEARANCES SHALL BE MAINTAINED BETWEEN ASPA'S DUCTLINE AND ALL ADJACENT STRUCTURES (CHARTED AND UNCHARTED) IN THE TRENCH:

MINIMUM SEPARATION CLEARANCES TO EXISTING UNDERGROUND DUCTLINES HORIZONTAL (PARALLEL)				
UTILITY BEING INSTALLED	EXISTING DIRECT BURIED CABLE	EXISTING DIRECT BURIED IN CONDUIT (NO CONCRETE ENCASEMENT)	EXISTING 3" CONCRETE ENCASEMENT	APPLICABLE NOTES:
WATER DB	36"	36"	36"	1, 4
WATER SERVICE LATERALS	12"	12"	12"	
WATER (CONCRETE JACKETED)	36"	36"	36"	1, 4

1. WHERE SPACES AVAILABLE, PARALLEL CLEARANCES TO OTHER UTILITIES, OR FOREIGN STRUCTURES OTHER THAN COMMUNICATION OR TRAFFIC SIGNAL SHALL BE 36".
2. IF 36" CLEARANCE CANNOT BE MET:
   - IF CLEARANCE IS LESS THAN 12", JACKET SEWER LINE WITH REINFORCED CONCRETE FOR A DISTANCE OF 5' PLUS PIPE DIAMETER.
   - IF CLEARANCE IS BETWEEN 12" AND 36", JACKET SEWER LINE WITH PLAIN CONCRETE.
3. ALL FUEL PIPELINE CROSSINGS SHALL BE REVIEWED AND APPROVED BY THE COMPANY THAT OWNS AND MAINTAINS IT.
4. 5 FEET CLEAR TO WATER MAINS 16" AND LARGER.
5. FOR SITUATIONS WITH 0" MINIMUM SEPARATION, A 6" SEPARATION IS RECOMMENDED.
6. CLEARANCES MEASURED FROM OUTER EDGES OR DIAMETERS OF UTILITIES.

MINIMUM SEPARATION CLEARANCES TO EXISTING UNDERGROUND DUCTLINES VERTICAL (CROSSING)				
UTILITY BEING INSTALLED	EXISTING DIRECT BURIED CABLE	EXISTING DIRECT BURIED IN CONDUIT (NO CONCRETE ENCASEMENT)	EXISTING 3" CONCRETE ENCASEMENT	APPLICABLE NOTES:
WATER DB	6"	6"	6"	
WATER SERVICE LATERALS	6"	6"	6"	2
WATER (CONCRETE JACKETED)	6"	6"	6"	2

1. IF CLEARANCE CANNOT BE MET:
   - IF CLEARANCE IS LESS THAN 12", JACKET SEWER LINE WITH REINFORCED CONCRETE FOR A DISTANCE OF 5' PLUS PIPE DIAMETER.
   - IF CLEARANCE IS BETWEEN 12" AND 24", JACKET SEWER LINE WITH PLAIN CONCRETE.
2. 12" VERTICAL CLEARANCES FOR PIPE DIAMETERS GREATER THAN 16".
3. ALL FUEL PIPELINE CROSSINGS SHALL BE REVIEWED AND APPROVED BY THE COMPANY THE OWNS AND MAINTAINS IT..
4. 5 FEET CLEAR TO WATER MAINS 16" AND LARGER.
5. FOR SITUATIONS WITH 0" MINIMUM SEPARATION, A 6" SEPARATION IS RECOMMENDED.
6. CLEARANCES MEASURED FROM OUTER EDGES OR DIAMETERS OF UTILITIES.

15. INDEMNITY

    THE CONTRACTOR SHALL INDEMNIFY, DEFEND AND HOLD HARMLESS ASPA FROM AND AGAINST ALL LOSSES, DAMAGES, CLAIMS, AND ACTIONS, INCLUDING BUT NOT LIMITED TO REASONABLE ATTORNEY'S FEES A

ASTCA GENERAL CONSTRUCTION/DESIGN NOTES:

1. THE CONTRACTOR SHALL PROCURE AND PAY FOR ALL LICENSES AND PERMITS AND SHALL GIVE ALL NOTICES NECESSARY AND INCIDENT TO THE DUE AND LAWFUL PROSECUTION OF THE WORK.

2. THE CONTRACTOR SHALL OBTAIN AN EXCAVATION PERMIT AND TONING REQUEST FROM ASTCA'S EXCAVATION PERMIT SECTION, LOCATED AT _____, TWO WEEKS PRIOR TO THE START OF CONSTRUCTION. _____.

3. PRIOR TO THE EXCAVATION OF THE DUCTLINE, THE CONTRACTOR SHALL REQUEST ASTCA TO LOCATE THE EXISTING DUCTLINE WHEREVER REQUIRED. FOR UNDERGROUND CABLE LOCATING AND MARKING, FIVE (5) WORKING DAYS ADVANCE NOTICE IS REQUIRED. THREE (3) WORKING DAYS ADVANCE NOTICE IS REQUIRED FOR ANY INSPECTION BY A DESIGNATED REPRESENTATIVE.

4. THE LOCATIONS OF EXISTING UTILITIES ARE APPROXIMATE ONLY. THE CONTRACTOR SHALL EXERCISE EXTREME CAUTION AND SHALL MAINTAIN PROPER CLEARANCES WHENEVER CONSTRUCTION CROSSES OR IS IN CLOSE PROXIMITY OF ASTCA FACILITIES. THE CONTRACTOR SHALL VERIFY THEIR LOCATIONS AND SHALL BE LIABLE FOR ANY DAMAGES TO ASTCA FACILITIES. ANY DAMAGES SHALL BE REPORTED IMMEDIATELY TO ASTCA'S REPAIR SECTION AT ___ (24 HOURS) OR TO THE EXCAVATION PERMIT SECTION AT XXX-XXXX (NORMAL WORKING HOURS, MONDAY THROUGH FRIDAY, EXCEPT HOLIDAYS). AS A RESULT OF HIS OPERATIONS, ADJUSTMENTS TO THE NEW DUCTLINE ALIGNMENT, IF REQUIRED, SHALL BE MADE TO PROVIDE THE REQUIRED CLEARANCES.

5. THE CONTRACTOR SHALL TAKE NECESSARY PRECAUTION NOT TO DAMAGE EXISTING CABLES OR DUCTS. AN ASTCA INSPECTOR OR DESIGNATED REPRESENTATIVE IS REQUIRED TO BE AT ANY JOB SITE WHENEVER THERE WILL BE A BREAKAGE INTO OR ENTRY INTO ANY STRUCTURE THAT CONTAINS ASTCA FACILITIES. TEMPORARY CABLE AND DUCT SUPPORTS SHALL BE PROVIDED WHEREVER NECESSARY.

6. THE CONTRACTOR SHALL NOTIFY ASTCA'S INSPECTOR OR DESIGNATED REPRESENTATIVE A MINIMUM OF 72 HOURS PRIOR TO EXCAVATION, BRACING, OR BACKFILLING OF ASTCA'S STRUCTURES OR FACILITIES.

7. ALL APPLICABLE CONSTRUCTION WORK SHALL BE DONE IN ACCORDANCE WITH THE ASTCA STANDARD SPECIFICATIONS FOR PLACING TELEPHONE SYSTEMS, ALL SUBSEQUENT AMENDMENTS AND ADDITIONS, AND ALL OTHER PERTINENT STANDARDS FOR TELEPHONE CONSTRUCTION. CONTRACTOR SHALL FAMILIARIZE HIS PERSONNEL BY OBTAINING APPLICABLE SPECIFICATIONS.

8. WHEN EXCAVATION IS ADJACENT TO OR BENEATH ASTCA'S EXISTING STRUCTURES OR FACILITIES, THE CONTRACTOR SHALL:

   A) SHEET AND/OR BRACE THE EXCAVATION TO PREVENT SLIDES, CAVE-INS, OR SETTLEMENTS TO ENSURE NO MOVEMENT TO ASTCA'S STRUCTURES OR FACILITIES.
   B) PROTECT EXISTING STRUCTURES AND/OR FACILITIES WITH BEAMS, STRUTS, OR UNDERPINNING WHILE EXCAVATING BENEATH THEM TO ENSURE NO MOVEMENT TO ASTCA'S STRUCTURES OR FACILITIES.

9. THE CONTRACTOR SHALL BRACE ALL POLES OR LIGHT STANDARDS NEAR THE NEW DUCTLINE, MANHOLE, OR HANDHOLE DURING HIS OPERATIONS.

10. THE CONTRACTOR SHALL SAW-CUT A.C. PAVEMENT AND CONCRETE GUTTER WHEREVER NEW MANHOLES, HANDHOLES, OR DUCTLINES ARE TO BE PLACED AND SHALL RESTORE TO EXISTING CONDITION OR BETTER.

11. THE CONTRACTOR SHALL COMPLY WITH THE POLICY ADOPTED BY THE DEPARTMENT OF PUBLIC WORKS, CONCERNING THE REPLACEMENT OF CONCRETE SIDEWALKS AFTER EXCAVATION WORK.

12. THE UNDERGROUND PIPES, CABLES, OR DUCTLINES KNOWN TO EXIST BY THE ENGINEER FROM HIS SEARCH OF RECORDS ARE INDICATED ON THE PLANS. THE CONTRACTOR SHALL VERIFY THE LOCATIONS AND DEPTHS OF THE FACILITIES AND EXERCISE PROPER CARE IN EXCAVATING IN THE AREA. WHEREVER CONNECTIONS OF NEW UTILITIES TO EXISTING UTILITIES ARE SHOWN ON THE PLANS, THE CONTRACTOR SHALL EXPOSE THE EXISTING LINES AT THE PROPOSED CONNECTIONS TO VERIFY THEIR LOCATIONS AND DEPTHS PRIOR TO EXCAVATION FOR THE NEW LINES.

13. WHEREVER CONNECTIONS TO EXISTING UTILITIES ARE SHOWN ON THE PLANS, THE CONTRACTOR SHALL EXPOSE THE EXISTING LINES PRIOR TO EXCAVATION OF THE MAIN TRENCHES TO VERIFY THEIR LOCATIONS AND DEPTHS.

14. THE CONTRACTOR, AT HIS OWN EXPENSE, SHALL KEEP THE PROJECT AND SURROUNDING AREA FREE FROM DUST NUISANCE. THE COST FOR SUPPLEMENTARY MEASURES, WHICH WILL BE REQUIRED BY ASPA, SHALL BE BORNE BY THE CONTRACTOR.

15. THE CONTRACTOR SHALL PUMP ALL MANHOLES DRY DURING FINAL INSPECTION.

16. THE CONTRACTOR SHALL NOTIFY ASTCA INSPECTOR 24 HOURS PRIOR TO THE POURING OF CONCRETE OR BACKFILLING.

17. WHEN CONNECTING TO MANHOLE WALLS, ALL EXISTING REINFORCING BARS SHALL BE LEFT INTACT. DUCTS SHALL BE ADJUSTED IN THE FIELD IN ORDER TO CLEAR REINFORCING.

18. THE CONTRACTOR SHALL BE RESPONSIBLE FOR LAYING OUT ALL REQUIRED LINES AND GRADES AND SHALL PRESERVE ALL BENCH MARKS AND WORKING POINTS NECESSARY TO LAY OUT THE WORK CORRECTLY. THE NEW DUCTLINE SHALL BE ADJUSTED BY THE CONTRACTOR TO SUIT THE EXISTING CONDITIONS AND THE DETAILS AS DESCRIBED IN THE PLANS.

19. MINIMUM CONCRETE STRENGTH SHALL BE:
    FOR DUCTLINE 2500 PSI AT 28 DAYS
    FOR MANHOLE 3000 PSI AT 28 DAYS OR AS SPECIFIED IN DESIGN NOTES

20. BENDS IN THE DUCT ALIGNMENT, DUE TO CHANGES IN GRADE SHALL HAVE A MINIMUM RADIUS OF 25 FEET. ALL 90 DEGREE C-BENDS AT A POLE OR AT THE BUILDING FLOOR SLAB PENETRATION, SHALL HAVE A BEND RADIUS OF TEN TIMES THE DIAMETER OF THE DUCT OR GREATER.

21. AFTER DUCTLINE HAS BEEN COMPLETED, A MANDREL WITH A SQUARE FRONT NOT LESS THAN 12" LONG AND HAVING A DIAMETER OF 1/4" LESS THAN THE INSIDE DIAMETER OF THE DUCT, SHALL BE PULLED THROUGH EACH DUCT AFTER WHICH A BRUSH WITH STIFF BRISTLES SHALL BE PULLED THROUGH TO MAKE CERTAIN THAT NO PARTICLES OF EARTH, SAND, OR GRAVEL HAVE BEEN LEFT INSIDE. DUCTS SHALL BE COMPLETELY DRY AND CLEAN.

22. ALL DUCTS AND CONDUITS SHALL HAVE AN 1800# POLYESTER MULE-TAPE (NEPTCO, WP1800P,ASTCA MATERIAL CODE NO. 571154) INSTALLED THROUGHOUT ITS ENTIRE LENGTH. ALL DUCTS SHALL BE CAPPED TO PREVENT ENTRY OF FOREIGN MATERIAL DURING CONSTRUCTION AND AT THE COMPLETION OF INSTALLATION.

TRAFFIC NOTES FOR WORK ON STREETS:

1. A PERMIT SHALL BE OBTAINED FROM THE DEPARTMENT OF PUBLIC WORKS BEFORE WORK ON ANY PORTION OF A PUBLIC STREET OR HIGHWAY MAY BEGIN. CONSTRUCTION TRAFFIC CONTROL PLANS APPROVED BY THE DEPARTMENT OF PUBLIC WORKS MUST BE PROVIDED WHEN APPLYING FOR THE PERMIT.

2. THE CONTRACTOR SHALL PROVIDE, INSTALL, AND MAINTAIN ALL NECESSARY SIGNS AND OTHER PROTECTIVE FACILITIES, AT WORK SITES ON OR ADJACENT TO PUBLIC STREETS AND HIGHWAYS. ALL SIGNS AND OTHER PROTECTIVE FACILITIES SHALL CONFORM TO THE CURRENT U.S. FEDERAL HIGHWAYS ADMINISTRATION'S "MANUAL ON UNIFORM TRAFFIC CONTROL DEVICES FOR STREETS AND HIGHWAYS, PART VI – TRAFFIC CONTROLS FOR STREET AND HIGHWAY CONSTRUCTION AND MAINTENANCE OPERATIONS."

3. WORK ON ANY ASG STREET AREA MAY BE PERFORMED ONLY BETWEEN THE HOURS OF 6:30 A.M. TO 5:00 P.M., MONDAY THROUGH FRIDAY EXCEPT HOLIDAYS AND FURLOUGH DAYS, UNLESS OTHERWISE PERMITTED BY DPW.

   AT CERTAIN LOCATIONS, "NO LANE CLOSURE" WILL BE ALLOWED DURING THE "BACK TO SCHOOL JAM", THANKSGIVING WEEKEND. CHRISTMAS/NEW YEAR PERIOD AND AT OTHER TIMES AS DIRECTED BY THE HIGHWAY DIVISION

4. DURING WORKING HOURS, THE CONTRACTOR SHALL PROVIDE FOR THROUGH TRAFFIC. DURING NON-WORKING HOURS, ALL TRENCHES SHALL BE COVERED WITH A SAFE NON-SKID BRIDGING MATERIAL AND ALL LANES SHALL BE OPEN TO TRAFFIC.

5. THE CONTRACTOR SHALL HIRE SPECIAL OFF-DUTY POLICE OFFICERS TO CONTROL THE FLOW OF TRAFFIC.

6. WHERE PEDESTRIAN WALKWAYS EXIST, THEY SHALL BE MAINTAINED IN PASSABLE CONDITION OR OTHER FACILITIES FOR PEDESTRIANS SHALL BE PROVIDED. PASSAGE BETWEEN WALKWAYS AT INTERSECTIONS SHALL LIKEWISE BE PROVIDED.

7. DRIVEWAYS SHALL BE KEPT OPEN UNLESS THE OWNERS OF THE PROPERTY USING THESE RIGHTS-OF-WAY ARE OTHERWISE PROVIDED FOR SATISFACTORILY.

8. THE CONTRACTOR SHALL REPLACE OR REPAIR ALL TRAFFIC SIGNS, POSTS AND PAVEMENT MARKINGS DISTURBED BY HIS ACTIVITIES.

9. THE CONTRACTOR SHALL NOTIFY THE DEPARTMENT OF PUBLIC WORKS AT ONE (1) WEEK PRIOR TO ANY WORK TO BE DONE ON SIGNS, POSTS, AND PAVEMENT MARKINGS.

10. NO EQUIPMENT SHALL BE STORED WITHIN STREET RIGHTS-OF-WAY EXCEPT AT LOCATIONS DESIGNATED IN WRITING AND APPROVED BY ASPA.

11. ASPA SHALL ENSURE THAT THE CONTRACTOR INSTALLS THE CONSTRUCTION TRAFFIC CONTROL DEVICES IN ACCORDANCE WITH THE MUTCD AND THE APPROVED TRAFFIC CONTROL PLANS AS SPECIFIED IN TRAFFIC NOTE #2.

ABBREVIATIONS:

AASHTO	AMERICAN ASSOCIATION OF STATE HIGHWAY AND TRANSPORTATION OFFICIALS
AC, A/C	ASPHALTIC CONCRETE,
ACP	ASBESTOS CEMENT PIPE
APP, APPROX	APPROXIMATE
ARV	AIR RELIEF VALVE
AS-DOH	AMERICAN SAMOA DEPARTMENT OF HEALTH
ASG	AMERICAN SAMOA GOVERNMENT
ASHPO	AMERICAN SAMOA HISTORIC PRESERVATION OFFICE
ASPA	AMERICAN SAMOA POWER AUTHORITY
ASTCA	AMERICAN SAMOA TELECOMMUNICATIONS AUTHORITY
AS-EPA	AMERICAN SAMOA ENVIRONMENTAL PROTECTION AGENCY
@	AT
BC	BOTTOM OF CURB
BLK(S)	BLOCK(S)
BMP	BEST MANAGEMENT PLAN
BTB	BITUMINOUS TREATED BASE
BV	BOTTOM VERTICAL
BW	BOTTOM OF WALL
℄	CENTERLINE
CB	CATCH BASIN
CBF	CATCH BASIN FILTER
CI	CAST IRON
CL	CLASS
CLR	CLEARANCE
CLSM	CONTROLLED LOW-STRENGTH MATERIAL
CO	CLEANOUT
CONC	CONCRETE
CONN	CONNECTION, CONNECT
CORP	CORPORATION
CP	CATHODIC PROTECTION
CU	COPPER
CRM	CEMENT RUBBLE MASONRY
D	DRAIN
DEFL	DEFLECTION
DET	DETAIL
DI	DUCTILE IRON, DRAIN INLET
DIP	DUCTILE IRON PIPE
DMH	DRAIN MANHOLE
DOH	DEPARTMENT OF HEALTH
DPS	DEPARTMENT OF PUBLIC SAFETY
DPW	DEPARTMENT OF PUBLIC WORKS
DWY	DRIVEWAY
E	EAST, ELECTRICAL
EA	EACH
ED	EXIST DRAIN
EL, ELEV	ELEVATION
ES	EXIST SEWER
EW	EXIST WATER
EXIST	EXIST, EXISTING
FG	FINISH GROUND
FH	FIRE HYDRANT
GV	GATE VALVE
GALV.	GALVANIZED
HT, H	HEIGHT
HORIZ/HOR	HORIZONTAL
HB	HORIZONTAL BEND
INV	INVERT
IPT	INTERNAL PIPE THREAD
JKT	JACKET
LAT	LATERAL
LF	LINEAR FEET
LP	LIGHT POLE
MB	MAILBOX
MH	MANHOLE
MIN	MINIMUM
MJ	MECHANICAL JOINT
M/N	METER NUMBER
MON	MONUMENT
MTR	METER
MULT	MULTIPLE
N	NORTH
NO.	NUMBER
O.C.	ON CENTER
OH, OHE	OVERHEAD, OVERHEAD ELECTRIC
O/S	OFFSET
OSHA	OCCUPATIONAL SAFETY & HEALTH ACT
P	PROPERTY LINE
PAVT	PAVEMENT
PC.	PIECE
PNRS	PROJECT NOTIFICATION AND REVIEW SYSTEM
PROF	PROFILE
PSI	POUNDS PER SQUARE INCH
PVC	POLYVINYL CHLORIDE
RECONN	RECONNECT
REINF	REINFORCED
REQ'D	REQUIRED
REV	REVERSE
RTE	ROUTE
R/W	RIGHT-OF-WAY
S	SEWER, SLOPE, SPREAD
SDMH	STORM DRAIN MANHOLE
SHT	SHEET
SL	STREET LIGHT
ST	STREET
STA	STATION
STD	STANDARD
STRUCT	STRUCTURAL
SW	SIDEWALK
TC	TOP OF CURB
TMK	TAX MAP KEY
TS	TOP STEM, TRAFFIC SIGNAL
TV	TOP VERTICAL
TW	TOP OF WALL
TYP	TYPICAL
UC	UNDERGROUND CABLE
UE	UNDERGROUND ELECTRICAL
UT	UNDERGROUND TELEPHONE
VB	VALVE BOX
V, VERT	VERTICAL
W	WATER, WEST
W/	WITH
WL	WATER LINE
WM	WATER METER
WMH	WATER MANHOLE
WP	WORKING PRESSURE
WV	WATER VALVE
WVHH	WATER VALVE HAND HOLE
WWF	WELDED WIRE FABRIC

LEGEND:

— — —	EXISTING WATER LINE
○	GATE VALVE
∘	AIR RELIEF VALVE
	EXISTING FIRE HYDRANT
	NEW FIRE HYDRANT
—W12—	NEW WATER LINE
—S—	EXISTING SEWER
— —	EXISTING DRAIN
—O/H—	OVERHEAD ELECTRICAL LINES
—UE—	UNDERGROUND ELECTRICAL LINES
—T—	UNDERGROUND COMMUNICATION LINES
— · — · —	INACTIVE WATERLINE
	EXISTING WATERLINE TO BE INACTIVATED

THIS DOCUMENT IS RELEASED FOR THE PURPOSE OF REVIEW UNDER THE AUTHORITY OF JOHN GOODES STATE REGISTRATION #5689-C IT IS NOT TO BE USED FOR CONSTRUCTION.

EXP. DATE: 04/30/24

REVISION	BY	CHECKED BY	APR.	DATE

PREPARED BY:
CHECKED BY:
APPROVED BY:
ISSUE FOR:

AMERICAN SAMOA POWER AUTHORITY

ASPA WATER ENGINEERING DIVISION
TAFUNA, AMERICAN SAMOA
P.O.BOX PPB, PAGO PAGO AM SAMOA 96799.
TEL(684) 699-1333, FAX (684) 699-4035

PROJECT: ASBESTOS CEMENT PIPE REPLACEMENT AND WATER SYSTEM UPGRADE PROJECT - PAGO SITE

DRAWING TITLE: GENERAL NOTES AND ABBREVIATIONS

PROJECT LOCATION: PAGO PAGO, TUTUILA ISLAND AMERICAN SAMOA

SCALE: AS SHOWN

PROJECT NO: --

DATE: MAY 2023

SHEET NO. C004

1 / C005 GENERAL LAYOUT PLAN
SCALE: 1"=120'

LEGEND:

— — — SHEET LIMITS

NOTE:

PIPE USED IN THE PROJECT SHALL BE PVC PIPE C909 AND DUCTILE IRON FITTINGS CLASS 53 AND SHALL BE TESTED AT 150 PSI. PIPES SHALL HAVE A PROTECTIVE COATING.

GRAPHICAL SCALE:

120' 0 120' 240' 360'

SCALE: 1"=120'

THIS DOCUMENT IS RELEASED FOR THE PURPOSE OF REVIEW UNDER THE AUTHORITY OF *GARY COOVER* STATE OF HAWAII *E3689-C* IT IS NOT TO BE USED FOR CONSTRUCTION.

EXP DATE: 04/30/24

REVISION	BY	CHECKED BY	APR.	DATE

PREPARED BY:
CHECKED BY:
APPROVED BY:
ISSUE FOR:

AMERICAN SAMOA POWER AUTHORITY

ASPA WATER ENGINEERING DIVISION
TAFUNA, AMERICAN SAMOA
P.O.BOX PPB, PAGO PAGO AM SAMOA 96799.
TEL(684) 699-1333, FAX (684) 699-4035

PROJECT: ASBESTOS CEMENT PIPE REPLACEMENT AND WATER SYSTEM UPGRADE PROJECT - PAGO SITE

DRAWING TITLE: GENERAL LAYOUT PLAN

PROJECT LOCATION: PAGO PAGO, TUTUILA ISLAND AMERICAN SAMOA

SCALE: AS SHOWN

PROJECT NO: --

DATE: MAY 2023

SHEET NO. C005

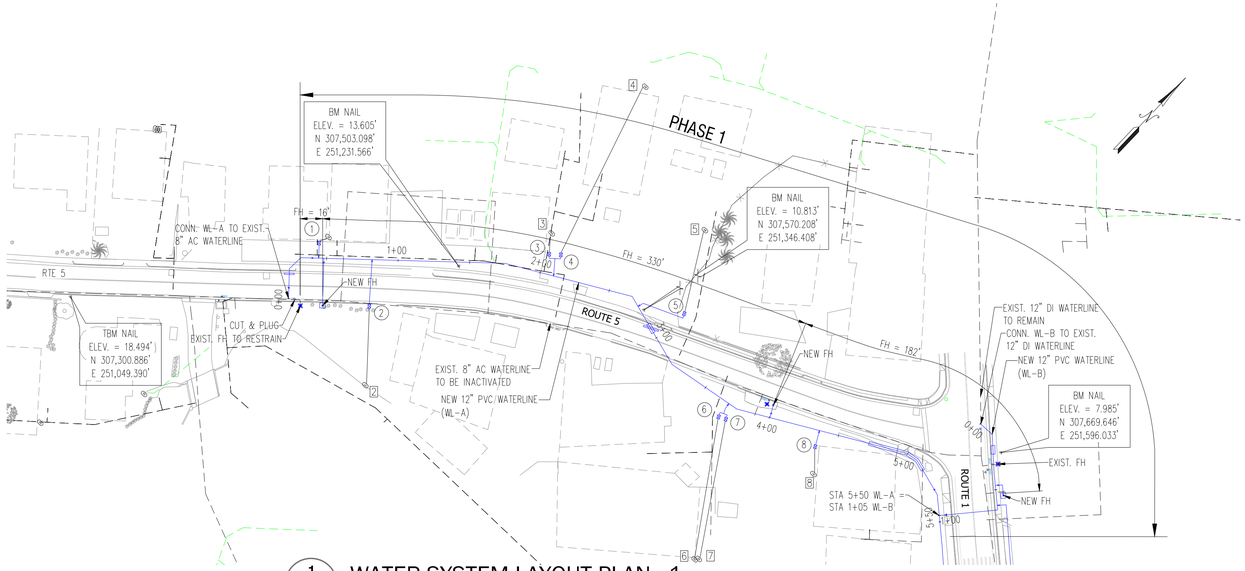

1 C006 WATER SYSTEM LAYOUT PLAN - 1

SCALE: 1"=50'

CONNECTION SCHEDULE						
SHEET NO.	STREET NAME	CONNECTION STATION	TYPE OF CONNECTION	NORMAL WORKING HOURS	AFTER WORKING HOURS AT 10:00PM	REMARKS (MAXIMUM DOWNTIME)
C008	ROUTE 5	STA. 0+00 WL-A	CUT-IN		X	4 HOURS
C009	ROUTE 1	STA. 0+00 WL-B	CUT-IN		X	4 HOURS
C015	INTERSECTION ROUTE 1/DRIVEWAY	STA. 0+35 WL-C	CUT-IN		X	4 HOURS

SEQUENCE OF WORK SCHEDULE

SHEET NO.	PHASE	STREET NAME/CROSSING STREET	STATION	DESCRIPTION
C008, C009	1	ROUTE 5 ROUTE 1	STA. 0+00 WL-A TO STA. 5+50 WL-A; STA. 0+00 WL-B TO STA. 1+20 WL-B	INSTALL NEW 12" PVC WATERLINE
C008	1	ROUTE 5	STA. 0+00 WL-A	CUT-IN: CONNECT TO EXIST. W8; CUT & PLUG EXIST MAIN
C009	1	ROUTE 1	STA. 0+00 WL-B	CUT-IN: CONNECT TO EXIST. W12; CUT & PLUG EXIST MAIN
C009	1	ROUTE 1	STA. 1+10 WL-B	CLOSE GATE VALVE INSTALLED IN PHASE 1
C008, C009	1	ROUTE 5 ROUTE 1	STA. 0+00 WL-A TO STA. 5+50 WL-A; STA. 0+00 WL-B TO STA. 1+20 WL-B	TRANSFER SERVICE LATERALS TO NEW WATER MAIN
C009, C010 C011, C012,C015	2	ROUTE 1 INTERSECTION ROUTE 1/DRIVEWAY	STA. 1+20 WL-B TO STA. 16+00 WL-B STA. 0+00 WL-C TO STA. 0+35 WL-C	INSTALL NEW 12" & 8" PVC WATERLINE
C015	2	INTERSECTION ROUTE 1/DRIVEWAY	STA. 0+35 WL-C	CUT-IN: CONNECT TO EXIST. W8; CUT & PLUG EXIST MAIN
C009	2	ROUTE 1	STA. 1+20 WL-B	PHASING: CONNECT PHASE 2 TO PHASE 1
C009, C010 C011, C012,C015	2	ROUTE 1 INTERSECTION ROUTE 1/DRIVEWAY	STA. 1+20 WL-B TO STA. 16+00 WL-B STA. 0+00 WL-C TO STA. 0+35 WL-C	TRANSFER SERVICE LATERALS TO NEW WATER MAIN

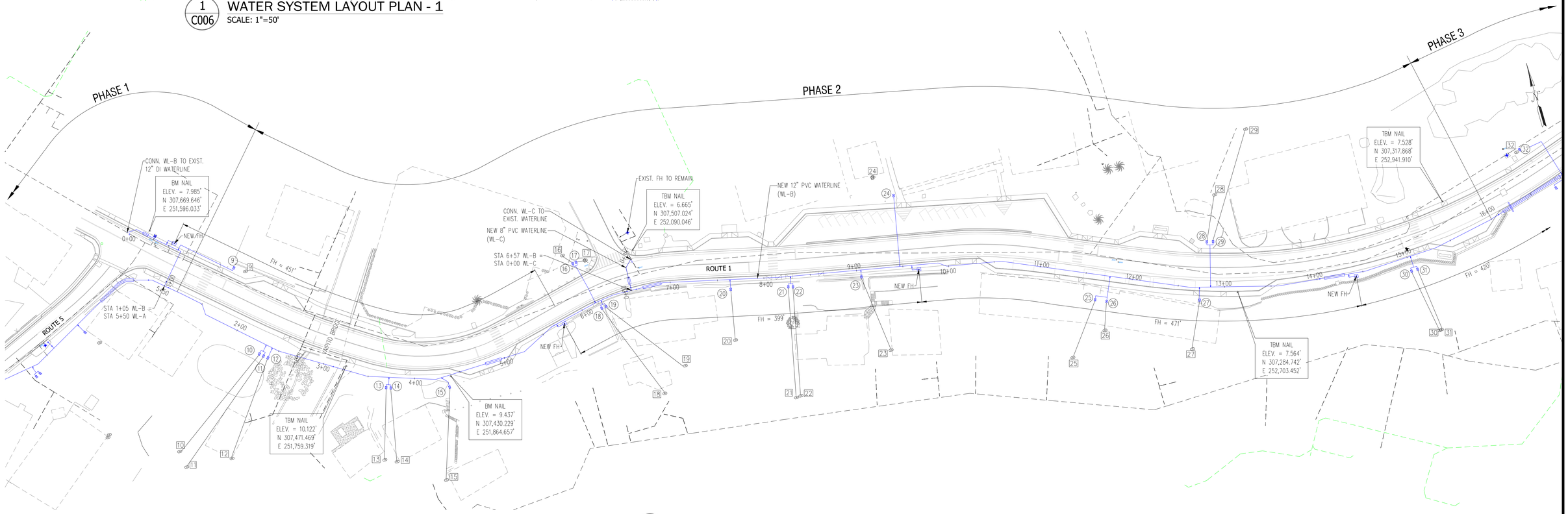

2 C006 WATER SYSTEM LAYOUT PLAN - 2

SCALE: 1"=50'

LEGEND:

- (WM) EXIST. WATER METER
- [47] EXIST. WATER METER TO BE REPLACED
- (47) PROPOSED WATER METER

GRAPHICAL SCALE:

50' 0 50' 100' 150'

SCALE: 1"=50'

THIS DOCUMENT IS RELEASED FOR THE PURPOSE OF REVIEW UNDER THE AUTHORITY OF GARY GOOVER STATE OF HAWAII 12369-C IT IS NOT TO BE USED FOR CONSTRUCTION

EXP DATE: 04/30/24

REVISION	BY	CHECKED BY	APR.	DATE

PREPARED BY:
CHECKED BY:
APPROVED BY:
ISSUE FOR:

AMERICAN SAMOA POWER AUTHORITY

ASPA WATER ENGINEERING DIVISION
TAFUNA, AMERICAN SAMOA
P.O.BOX PPB, PAGO PAGO AM SAMOA 96799.
TEL(684) 699-1333, FAX (684) 699-4035

PROJECT: ASBESTOS CEMENT PIPE REPLACEMENT AND WATER SYSTEM UPGRADE PROJECT - PAGO SITE

DRAWING TITLE: WATER SYSTEM LAYOUT PLAN - 1 & 2

PROJECT LOCATION: PAGO PAGO, TUTUILA ISLAND AMERICAN SAMOA

SCALE: AS SHOWN

PROJECT NO: --

DATE: MAY 2023

SHEET NO. C006

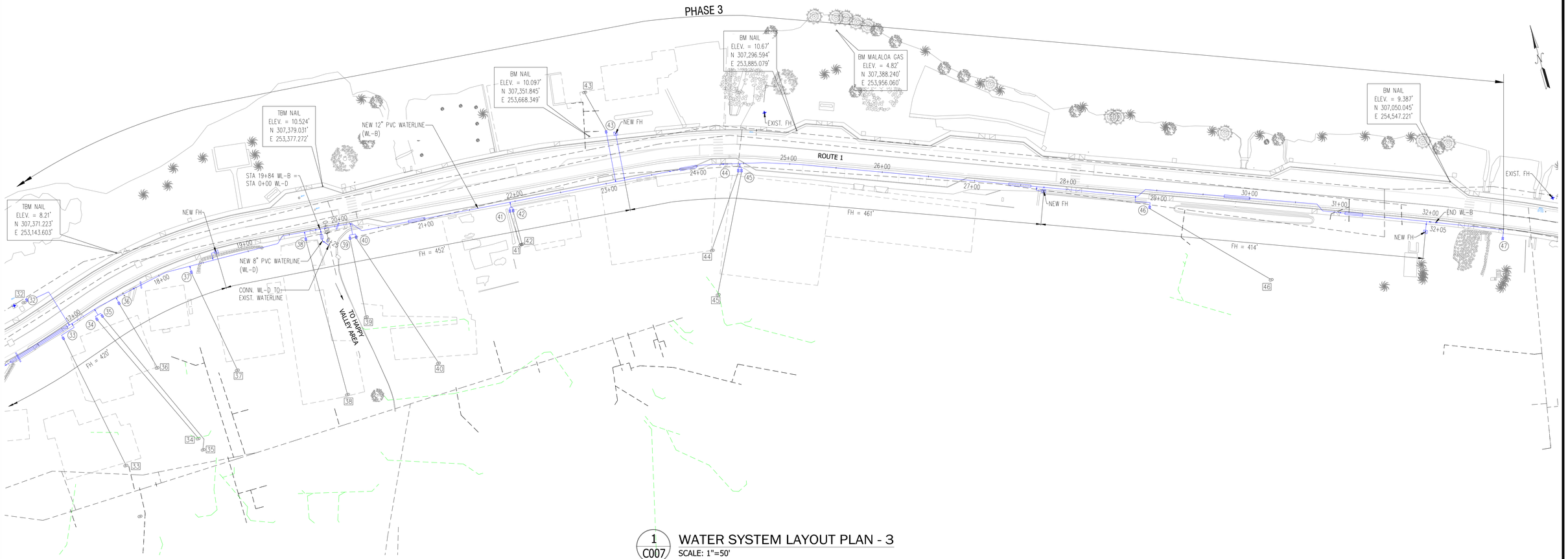

1 / C007 WATER SYSTEM LAYOUT PLAN - 3

SCALE: 1"=50'

CONNECTION SCHEDULE						
SHEET NO.	STREET NAME	CONNECTION STATION	TYPE OF CONNECTION	NORMAL WORKING HOURS	AFTER WORKING HOURS AT 10:00 PM	REMARKS (MAXIMUM DOWNTIME)
C016	INTERSECTION ROUTE 1/ROAD TO HAPPY VALLEY	STA. 0+21 WL-D	CUT-IN		X	4 HOURS

SEQUENCE OF WORK SCHEDULE

SHEET NO.	PHASE	STREET NAME/CROSSING STREET	STATION	DESCRIPTION
C012, C013 C014, C015, C016	3	ROUTE 1 INTERSECTION ROUTE 1/ROAD TO HAPPY VALLEY	STA. 16+00 WL-B TO STA. 32+05 WL-B; STA. 0+00 WL-D TO STA. 0+21 WL-D	INSTALL NEW 12", 8" & 4" PVC WATERLINE
C016	3	INTERSECTION ROUTE 1/ROAD TO HAPPY VALLEY	STA. 0+21 WL-D	CUT-IN: CONNECT TO EXIST. W4; CUT & PLUG EXIST MAIN
C012	3	ROUTE 1	STA. 16+00 WL-B	PHASING: CONNECT PHASE 3 TO PHASE 2
C012, C013 C014, C015, C016	3	ROUTE 1 INTERSECTION ROUTE 1/ROAD TO HAPPY VALLEY	STA. 16+00 WL-B TO STA. 32+05 WL-B; STA. 0+00 WL-D TO STA. 0+21 WL-D	TRANSFER SERVICE LATERALS TO NEW WATER MAIN

LEGEND:

- (WM) EXIST. WATER METER
- [47] EXIST. WATER METER TO BE REPLACED
- (47) PROPOSED WATER METER

GRAPHICAL SCALE:

50' 0 50' 100' 150'

SCALE: 1"=50'

THIS DOCUMENT IS RELEASED FOR THE PURPOSE OF REVIEW UNDER THE AUTHORITY OF GARY GOOVER STATE OF HAWAII 15689-C IT IS NOT TO BE USED FOR CONSTRUCTION.

EXP DATE: 04/30/24

REVISION	BY	CHECKED BY	APR.	DATE

PREPARED BY:

CHECKED BY:

APPROVED BY:

ISSUE FOR:

AMERICAN SAMOA POWER AUTHORITY

ASPA WATER ENGINEERING DIVISION
TAFUNA, AMERICAN SAMOA
P.O.BOX PPB, PAGO PAGO AM SAMOA 96799.
TEL(684) 699-1333, FAX (684) 699-4035

PROJECT: ASBESTOS CEMENT PIPE REPLACEMENT AND WATER SYSTEM UPGRADE PROJECT - PAGO SITE

DRAWING TITLE: WATER SYSTEM LAYOUT PLAN - 3

PROJECT LOCATION: PAGO PAGO, TUTUILA ISLAND AMERICAN SAMOA

SCALE: AS SHOWN

PROJECT NO: --

DATE: MAY 2023

SHEET NO. C007

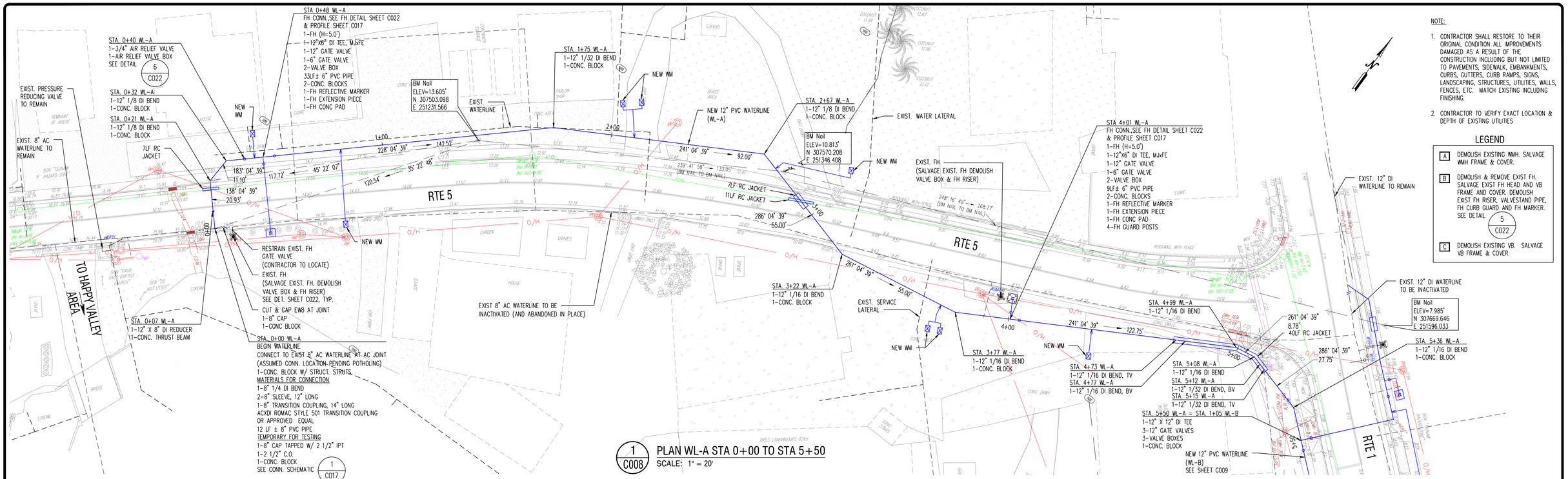

1 C008 PLAN WL-A STA 0+00 TO STA 5+50
SCALE: 1" = 20'

NOTE:

1. CONTRACTOR SHALL RESTORE TO THEIR ORIGINAL CONDITION ALL IMPROVEMENTS DAMAGED AS A RESULT OF THE CONSTRUCTION INCLUDING BUT NOT LIMITED TO PAVEMENTS, SIDEWALK, EMBANKMENTS, CURBS, GUTTERS, CURB RAMPS, SIGNS, LANDSCAPING, STRUCTURES, UTILITIES, WALLS, FENCES, ETC. MATCH EXISTING INCLUDING FINISHING.
2. CONTRACTOR TO VERIFY EXACT LOCATION & DEPTH OF EXISTING UTILITIES

LEGEND

- A — DEMOLISH EXISTING WMH. SALVAGE WMH FRAME & COVER.
- B — DEMOLISH & REMOVE EXIST FH. SALVAGE EXIST FH HEAD AND VB FRAME AND COVER. DEMOLISH EXIST FH RISER, VALVESTAND PIPE, FH CURB GUARD AND FH MARKER. SEE DETAIL 5 C022
- C — DEMOLISH EXISTING VB. SALVAGE VB FRAME & COVER.

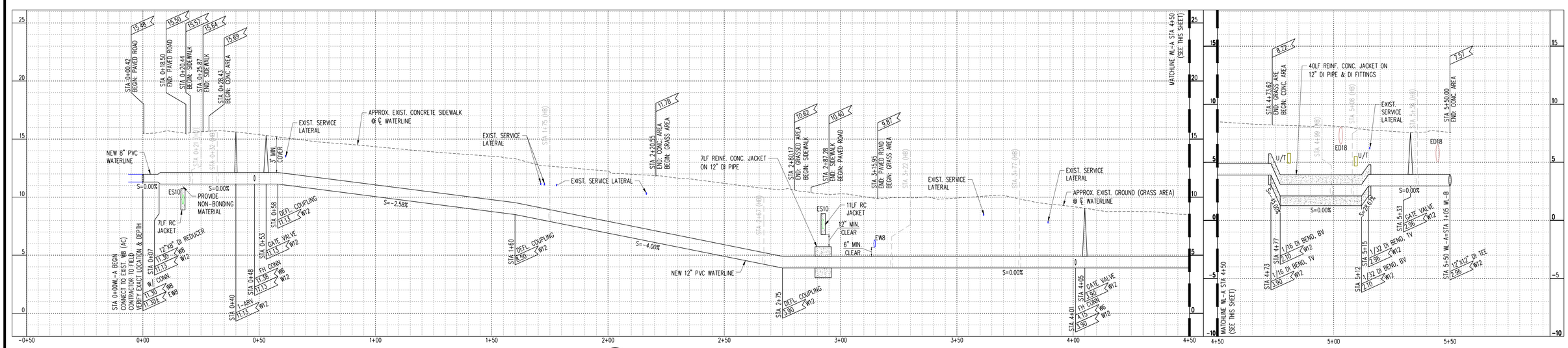

2 C008 PROFILE WL-A STA 0+00 TO STA 5+50
SCALE: HOR. 1" = 20'
VERT. 1" = 4'

NOTES:

1. CONTRACTOR SHALL RESTORE TO THEIR ORIGINAL CONDITION ALL IMPROVEMENTS DAMAGED AS A RESULT OF THE CONSTRUCTION INCLUDING BUT NOT LIMITED TO PAVEMENTS, SIDEWALK, EMBANKMENTS, CURBS, CURB RAMPS, SIGNS, LANDSCAPING, STRUCTURES, UTILITIES, WALLS, FENCES, BUS STOP, BUS PAD, ETC. MATCH EXISTING INCLUDING FINISHING.

GRAPHICAL SCALE:

4' 0 4' 8' 12'
SCALE: 1"=4'

20' 0 20' 40' 60'
SCALE: 1"=20'

THIS DOCUMENT IS RELEASED FOR THE PURPOSE OF REVIEW UNDER THE AUTHORITY OF GARY GOOVER STATE OF HAWAII E13689-C IT IS NOT TO BE USED FOR CONSTRUCTION

EXP DATE: 04/30/24

REVISION	BY	CHECKED BY	APR.	DATE

PREPARED BY:
CHECKED BY:
APPROVED BY:
ISSUE FOR:

ASPA
AMERICAN SAMOA POWER AUTHORITY

ASPA WATER ENGINEERING DIVISION
TAFUNA, AMERICAN SAMOA
P.O.BOX PPB, PAGO PAGO AM SAMOA 96799.
TEL(684) 699-1333, FAX (684) 699-4035

PROJECT: ASBESTOS CEMENT PIPE REPLACEMENT AND WATER SYSTEM UPGRADE PROJECT - PAGO SITE

DRAWING TITLE: WATERLINE A - PLAN AND PROFILE
STATION 0+00 TO STATION 5+50

PROJECT LOCATION: PAGO PAGO, TUTUILA ISLAND AMERICAN SAMOA

SCALE: AS SHOWN
PROJECT NO: --
DATE: MAY 2023
SHEET NO. C008

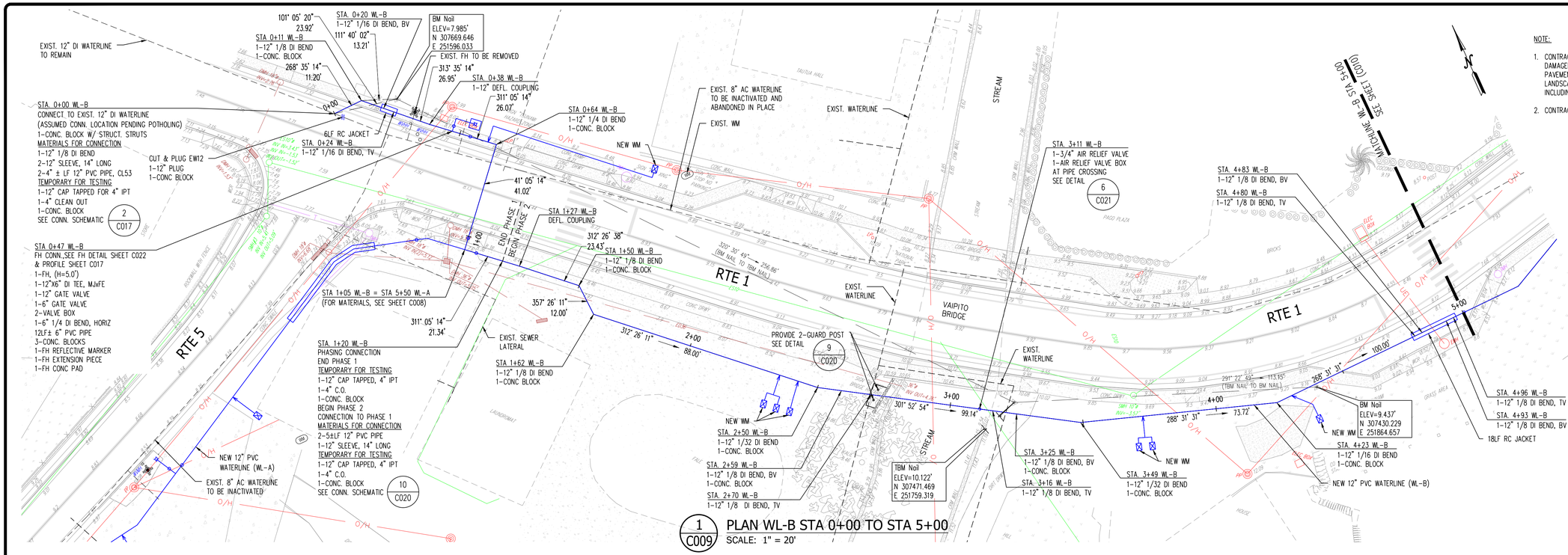

1 C009 PLAN WL-B STA 0+00 TO STA 5+00
SCALE: 1" = 20'

NOTE:

1. CONTRACTOR SHALL RESTORE TO THEIR ORIGINAL CONDITION ALL IMPROVEMENTS DAMAGED AS A RESULT OF THE CONSTRUCTION INCLUDING BUT NOT LIMITED TO PAVEMENTS, SIDEWALK, EMBANKMENTS, CURBS, GUTTERS, CURB RAMPS, SIGNS, LANDSCAPING, STRUCTURES, UTILITIES, WALLS, FENCES, ETC. MATCH EXISTING INCLUDING FINISHING.
2. CONTRACTOR TO VERIFY EXACT LOCATION & DEPTH OF EXISTING UTILITIES

LEGEND

A DEMOLISH EXISTING WMH. SALVAGE WMH FRAME & COVER.

B DEMOLISH & REMOVE EXIST FH. SALVAGE EXIST FH HEAD AND VB FRAME AND COVER. DEMOLISH EXIST FH RISER, VALVESTAND PIPE, FH CURB GUARD AND FH MARKER. SEE DETAIL 5 C022

C DEMOLISH EXISTING VB. SALVAGE VB FRAME & COVER.

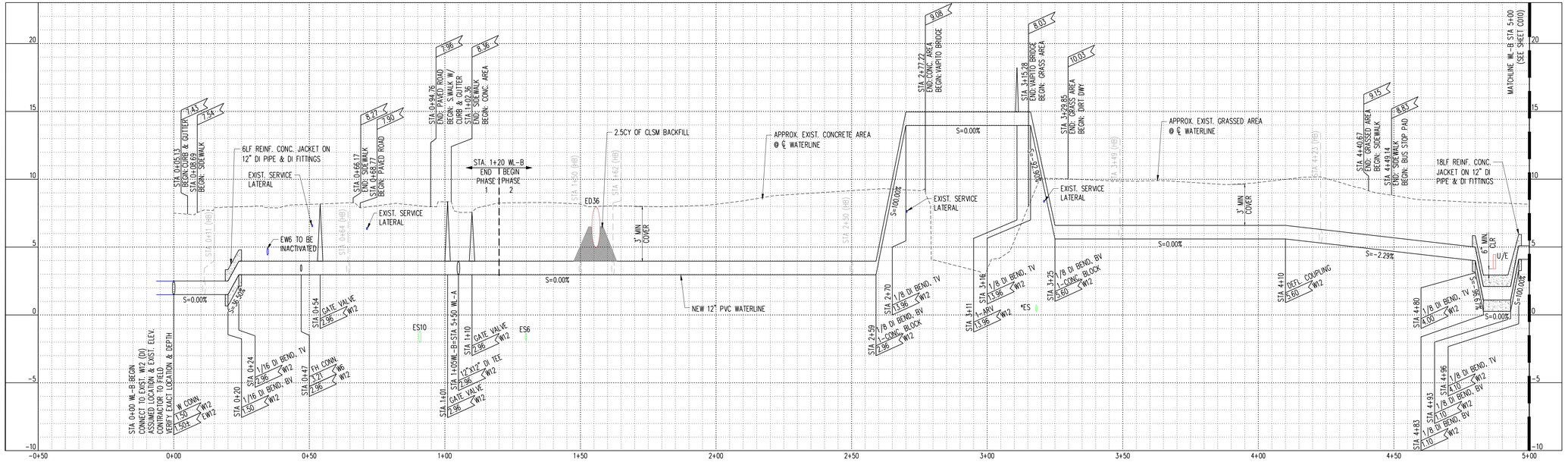

2 C009 PROFILE WL-B STA 0+00 TO STA 5+00
SCALE: HOR. 1" = 20'
VERT. 1" = 4'

NOTES:

1. CONTRACTOR SHALL RESTORE TO THEIR ORIGINAL CONDITION ALL IMPROVEMENTS DAMAGED AS A RESULT OF THE CONSTRUCTION INCLUDING BUT NOT LIMITED TO PAVEMENTS, SIDEWALK, EMBANKMENTS, CURBS, CURB RAMPS, SIGNS, LANDSCAPING, STRUCTURES, UTILITIES, WALLS, FENCES, BUS STOP, BUS PAD, ETC. MATCH EXISTING INCLUDING FINISHING.

GRAPHICAL SCALE:

4' 0 4' 8' 12'
SCALE: 1"=4'
20' 0 20' 40' 60'
SCALE: 1"=20'

THIS DOCUMENT IS RELEASED FOR THE PURPOSE OF REVIEW UNDER THE AUTHORITY OF GARY GOOVER STATE OF HAWAII #13689-C IT IS NOT TO BE USED FOR CONSTRUCTION

EXP. DATE: 04/30/24

REVISION	BY	CHECKED BY	APR.	DATE

PREPARED BY:
CHECKED BY:
APPROVED BY:
ISSUE FOR:

ASPA
AMERICAN SAMOA POWER AUTHORITY

ASPA WATER ENGINEERING DIVISION
TAFUNA, AMERICAN SAMOA
P.O.BOX PPB, PAGO PAGO AM SAMOA 96799.
TEL(684) 699-1333, FAX (684) 699-4035

PROJECT: ASBESTOS CEMENT PIPE REPLACEMENT AND WATER SYSTEM UPGRADE PROJECT - PAGO SITE

DRAWING TITLE: WATERLINE B - PLAN AND PROFILE
STATION 0+00 TO STATION 5+00

PROJECT LOCATION: PAGO PAGO, TUTUILA ISLAND AMERICAN SAMOA

SCALE: AS SHOWN
PROJECT NO: --
DATE: MAY 2023
SHEET NO. C009

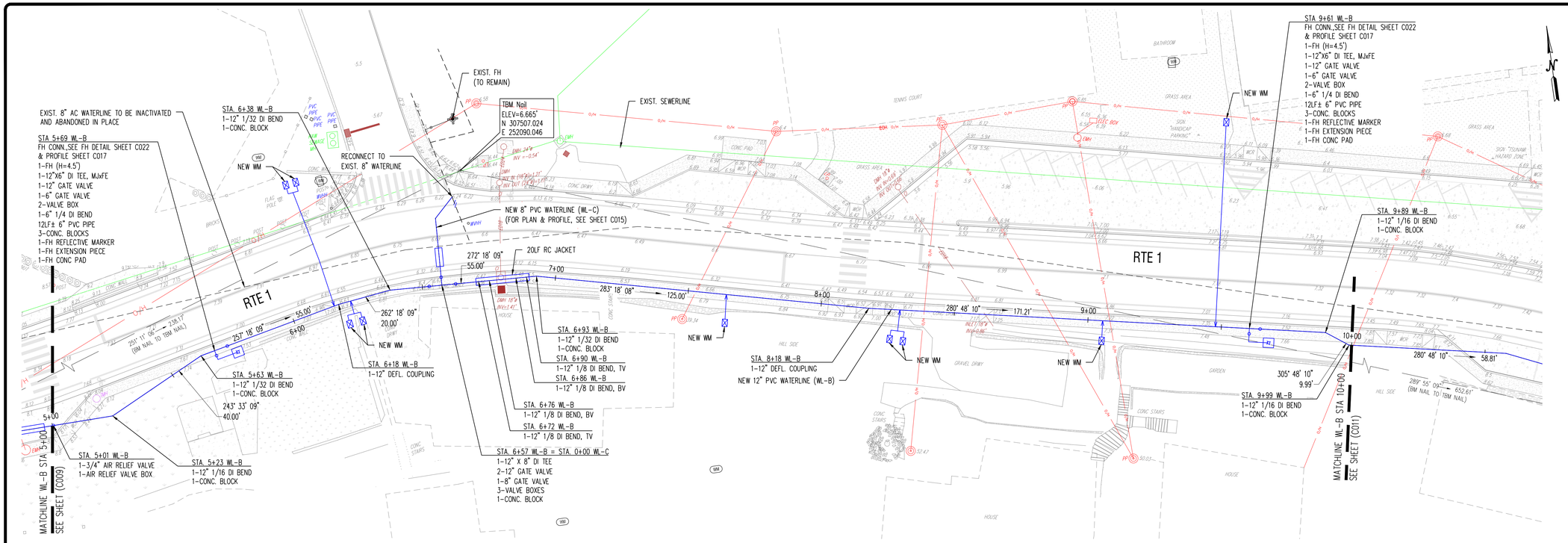

1 C010 PLAN WL-B STA 5+00 TO STA 10+00
SCALE: 1" = 20'

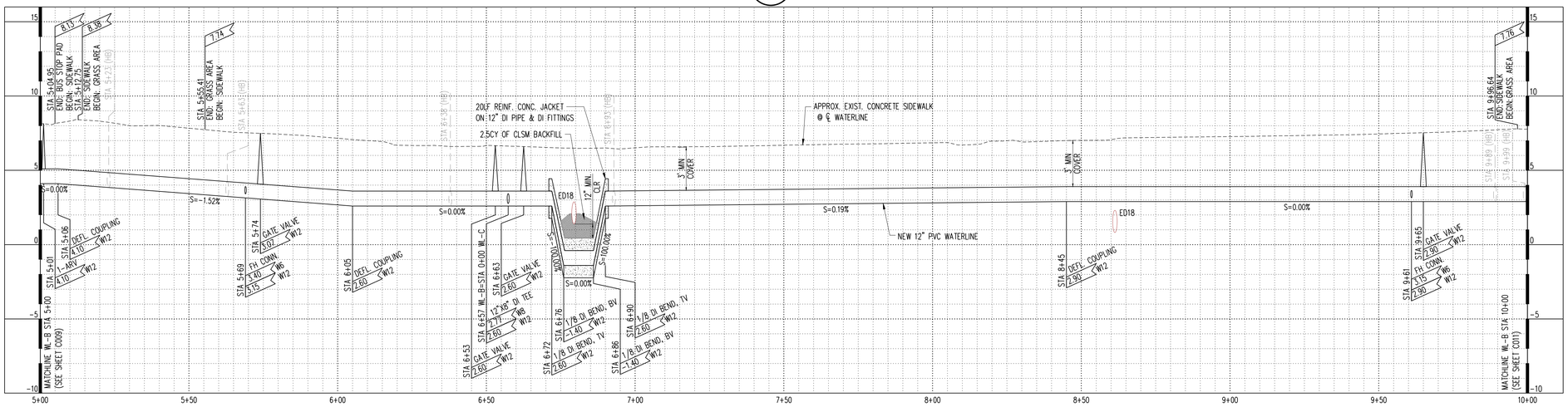

2 C010 PROFILE WL-B STA 5+00 TO STA 10+00
SCALE: HOR. 1" = 20'
VERT. 1" = 4'

NOTE:

1. CONTRACTOR SHALL RESTORE TO THEIR ORIGINAL CONDITION ALL IMPROVEMENTS DAMAGED AS A RESULT OF THE CONSTRUCTION INCLUDING BUT NOT LIMITED TO PAVEMENTS, SIDEWALK, EMBANKMENTS, CURBS, GUTTERS, CURB RAMPS, SIGNS, LANDSCAPING, STRUCTURES, UTILITIES, WALLS, FENCES, ETC. MATCH EXISTING INCLUDING FINISHING.
2. CONTRACTOR TO VERIFY EXACT LOCATION & DEPTH OF EXISTING UTILITIES

LEGEND

- A — DEMOLISH EXISTING WMH. SALVAGE WMH FRAME & COVER.
- B — DEMOLISH & REMOVE EXIST FH. SALVAGE EXIST FH HEAD AND VB FRAME AND COVER. DEMOLISH EXIST FH RISER, VALVESTAND PIPE, FH CURB GUARD AND FH MARKER. SEE DETAIL 5/C022
- C — DEMOLISH EXISTING VB. SALVAGE VB FRAME & COVER.

NOTES:

1. CONTRACTOR SHALL RESTORE TO THEIR ORIGINAL CONDITION ALL IMPROVEMENTS DAMAGED AS A RESULT OF THE CONSTRUCTION INCLUDING BUT NOT LIMITED TO PAVEMENTS, SIDEWALK, EMBANKMENTS, CURBS, CURB RAMPS, SIGNS, LANDSCAPING, STRUCTURES, UTILITIES, WALLS, FENCES, BUS STOP, BUS PAD, ETC. MATCH EXISTING INCLUDING FINISHING.

GRAPHICAL SCALE:

4' 0 4' 8' 12'
SCALE: 1"=4'
20' 0 20' 40' 60'
SCALE: 1"=20'

THIS DOCUMENT IS NOT VALID FOR THE PURPOSE OF REVIEW UNDER THE AUTHORITY OF GREY GOOVER STATE OF HAWAII #13689-C IT IS NOT TO BE USED FOR CONSTRUCTION.

EXP DATE: 04/30/24

REVISION	BY	CHECKED BY	APR.	DATE

PREPARED BY:
CHECKED BY:
APPROVED BY:
ISSUE FOR:

ASPA
AMERICAN SAMOA POWER AUTHORITY

ASPA WATER ENGINEERING DIVISION
TAFUNA, AMERICAN SAMOA
P.O.BOX PPB, PAGO PAGO AM SAMOA 96799.
TEL(684) 699-1333, FAX (684) 699-4035

PROJECT: ASBESTOS CEMENT PIPE REPLACEMENT AND WATER SYSTEM UPGRADE PROJECT - PAGO SITE

DRAWING TITLE: WATERLINE B - PLAN AND PROFILE
STATION 5+00 TO STATION 10+00

PROJECT LOCATION: PAGO PAGO, TUTUILA ISLAND AMERICAN SAMOA

SCALE: AS SHOWN
PROJECT NO.: --
DATE: MAY 2023
SHEET NO.: C010

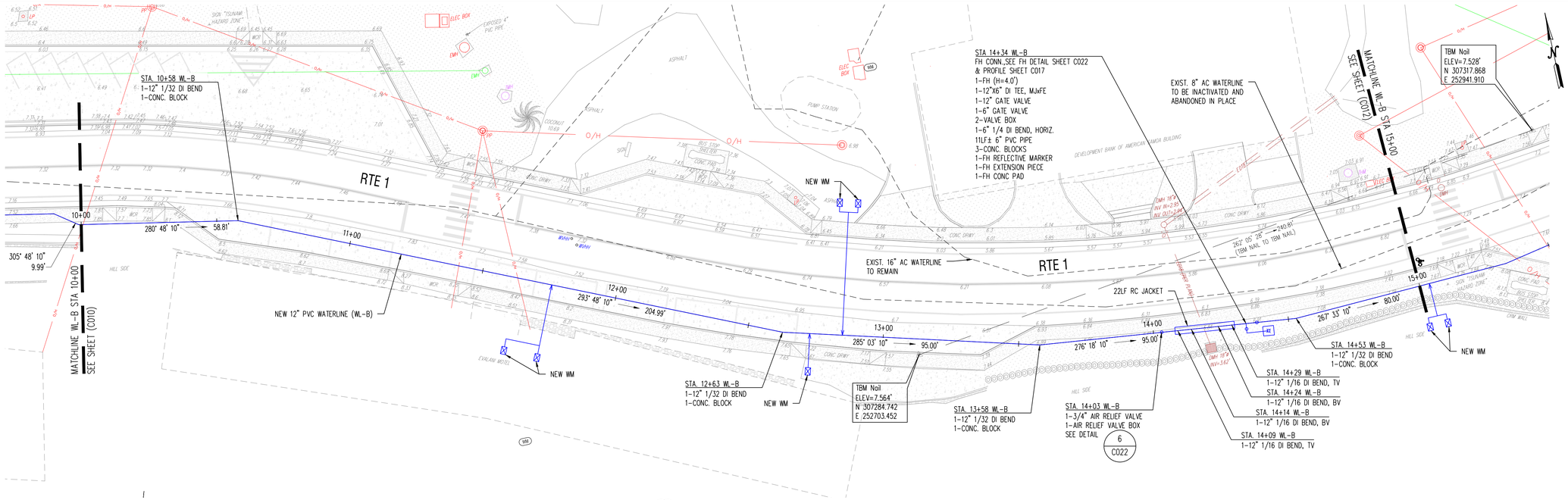
STA. 10+58 WL-B
1-12" 1/32 DI BEND
1-CONC. BLOCK
RTE 1
10+00
11+00
12+00
13+00
14+00
15+00
305° 48' 10"
9.99'
280° 48' 10"
58.81'
293° 48' 10"
204.99'
285° 03' 10"
95.00'
276° 18' 10"
95.00'
267° 33' 10"
80.00'
MATCHLINE WL-B STA 10+00
SEE SHEET (C010)
NEW 12" PVC WATERLINE (WL-B)
NEW WM
STA. 12+63 WL-B
1-12" 1/32 DI BEND
1-CONC. BLOCK
TBM Noil
ELEV=7.564'
N 307284.742
E 252703.452
STA. 13+58 WL-B
1-12" 1/32 DI BEND
1-CONC. BLOCK
STA. 14+03 WL-B
1-3/4" AIR RELIEF VALVE
1-AIR RELIEF VALVE BOX
SEE DETAIL
6
C022
STA 14+34 WL-B
FH CONN.SEE FH DETAIL SHEET C022
& PROFILE SHEET C017
1-FH (H=4.0')
1-12"X6" DI TEE, MJxFE
1-12" GATE VALVE
1-6" GATE VALVE
2-VALVE BOX
1-6" 1/4 DI BEND, HORIZ.
11LF± 6" PVC PIPE
3-CONC. BLOCKS
1-FH REFLECTIVE MARKER
1-FH EXTENSION PIECE
1-FH CONC PAD
EXIST. 16" AC WATERLINE
TO REMAIN
22LF RC JACKET
EXIST. 8" AC WATERLINE
TO BE INACTIVATED AND
ABANDONED IN PLACE
STA. 14+29 WL-B
1-12" 1/16 DI BEND, TV
STA. 14+24 WL-B
1-12" 1/16 DI BEND, BV
STA. 14+14 WL-B
1-12" 1/16 DI BEND, BV
STA. 14+09 WL-B
1-12" 1/16 DI BEND, TV
STA. 14+53 WL-B
1-12" 1/32 DI BEND
1-CONC. BLOCK
MATCHLINE WL-B STA 15+00
SEE SHEET (C012)
TBM Noil
ELEV=7.528'
N 307317.868
E 252941.910
262° 05' 26" 240.81'
(TBM NAIL TO TBM NAIL)
EXISTING 4" PVC PIPE
ELEC BOX
PUMP STATION
DEVELOPMENT BANK OF AMERICAN SAMOA BUILDING
EVALAN MOTEL
CONC DRWY
ASPHALT
HILL SIDE
BUS STOP SHELTER
CONC PAD
SIGN "TSUNAMI HAZARD ZONE"
COCONUT TREE
O/H
WM
SP
EM1
EM4 18"Ø INV IN=2.93' INV OUT=2.88'
EM4 18"Ø INV=3.62'
EM4 18"Ø INV=3.63'
EM4 18"Ø INV=3.63'
EXISTING 4" PVC PIPE
EXISTING 4" PVC PIPE
EXISTING 4" PVC PIPE

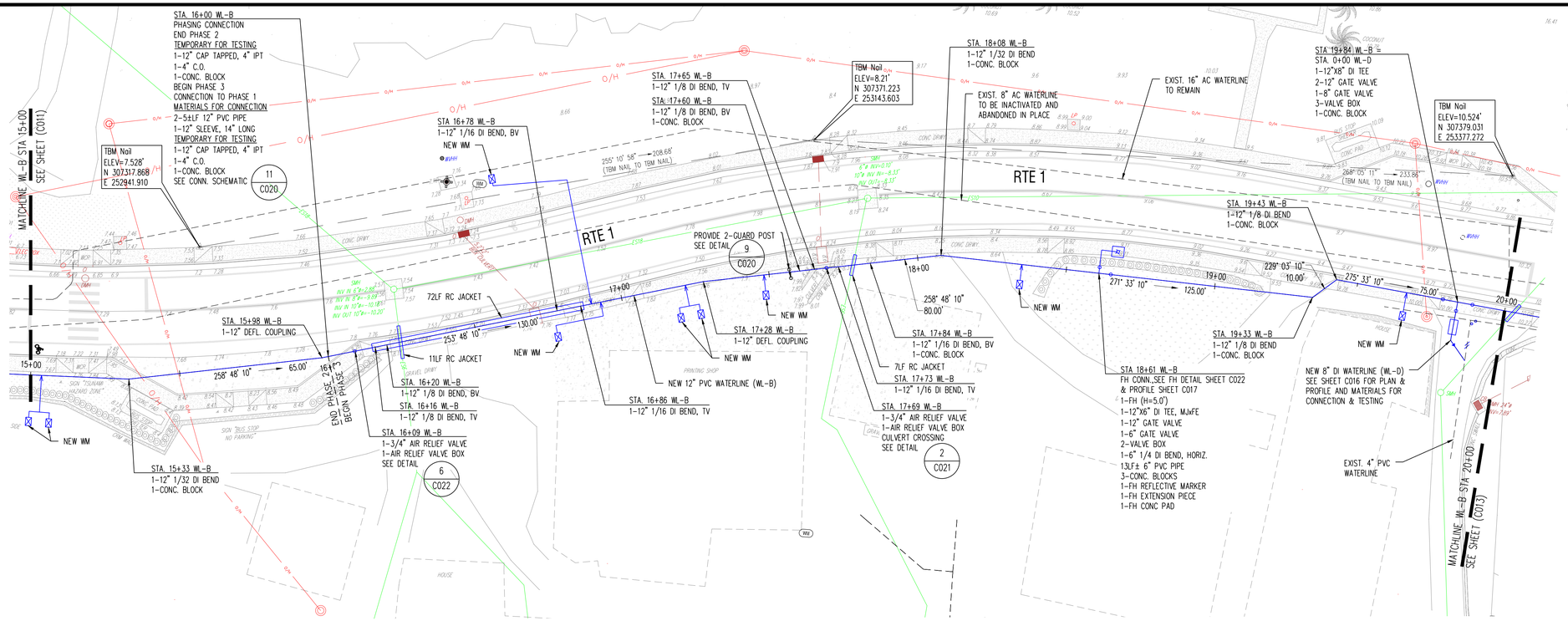

1 / C012 PLAN WL-B STA 15+00 TO STA 20+00
SCALE: 1" = 20'

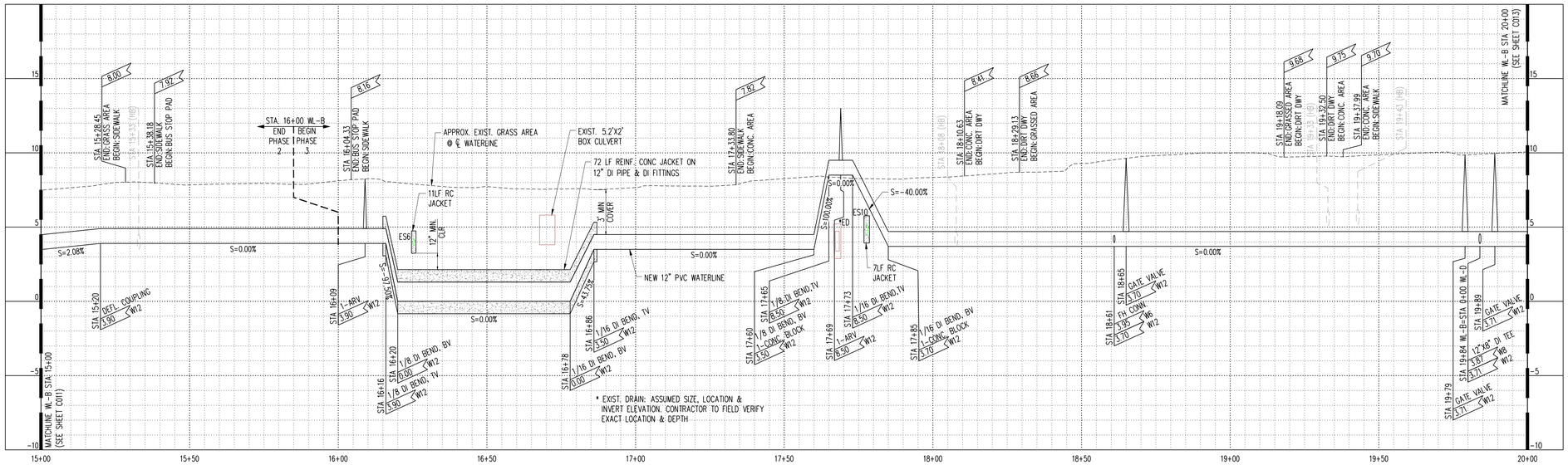

2 / C012 PROFILE WL-B STA 15+00 TO STA 20+00
SCALE: HOR. 1" = 20'
VERT. 1" = 4'

NOTE:

1. CONTRACTOR SHALL RESTORE TO THEIR ORIGINAL CONDITION ALL IMPROVEMENTS DAMAGED AS A RESULT OF THE CONSTRUCTION INCLUDING BUT NOT LIMITED TO PAVEMENTS, SIDEWALK, EMBANKMENTS, CURBS, GUTTERS, CURB RAMPS, SIGNS, LANDSCAPING, STRUCTURES, UTILITIES, WALLS, FENCES, ETC. MATCH EXISTING INCLUDING FINISHING.
2. CONTRACTOR TO VERIFY EXACT LOCATION & DEPTH OF EXISTING UTILITIES

LEGEND

- A — DEMOLISH EXISTING WMH. SALVAGE WMH FRAME & COVER.
- B — DEMOLISH & REMOVE EXIST FH. SALVAGE EXIST FH HEAD AND VB FRAME AND COVER. DEMOLISH EXIST FH RISER, VALVESTAND PIPE, FH CURB GUARD AND FH MARKER. SEE DETAIL 5 / C022
- C — DEMOLISH EXISTING VB. SALVAGE VB FRAME & COVER.

NOTES:

1. CONTRACTOR SHALL RESTORE TO THEIR ORIGINAL CONDITION ALL IMPROVEMENTS DAMAGED AS A RESULT OF THE CONSTRUCTION INCLUDING BUT NOT LIMITED TO PAVEMENTS, SIDEWALK, EMBANKMENTS, CURBS, CURB RAMPS, SIGNS, LANDSCAPING, STRUCTURES, UTILITIES, WALLS, FENCES, BUS STOP, BUS PAD, ETC. MATCH EXISTING INCLUDING FINISHING.

GRAPHICAL SCALE:

4' 0 4' 8' 12'
SCALE: 1"=4'

20' 0 20' 40' 60'
SCALE: 1"=20'

THIS DOCUMENT IS RELEASED FOR THE PURPOSE OF REVIEW UNDER THE AUTHORITY OF GARY COOVER STATE OF HAWAII 23589-C IT IS NOT TO BE USED FOR CONSTRUCTION

EXP DATE: 04/30/24

REVISION	BY	CHECKED BY	APR.	DATE

PREPARED BY:
CHECKED BY:
APPROVED BY:
ISSUE FOR:

AMERICAN SAMOA POWER AUTHORITY

ASPA WATER ENGINEERING DIVISION
TAFUNA, AMERICAN SAMOA
P.O.BOX PPB, PAGO PAGO AM SAMOA 96799.
TEL(684) 699-1333, FAX (684) 699-4035

PROJECT: ASBESTOS CEMENT PIPE REPLACEMENT AND WATER SYSTEM UPGRADE PROJECT - PAGO SITE

DRAWING TITLE: WATERLINE B - PLAN AND PROFILE
STATION 15+00 TO STATION 20+00

PROJECT LOCATION: PAGO PAGO, TUTUILA ISLAND AMERICAN SAMOA

SCALE:	PROJECT NO:
AS SHOWN	--
DATE: MAY 2023	SHEET NO. C012

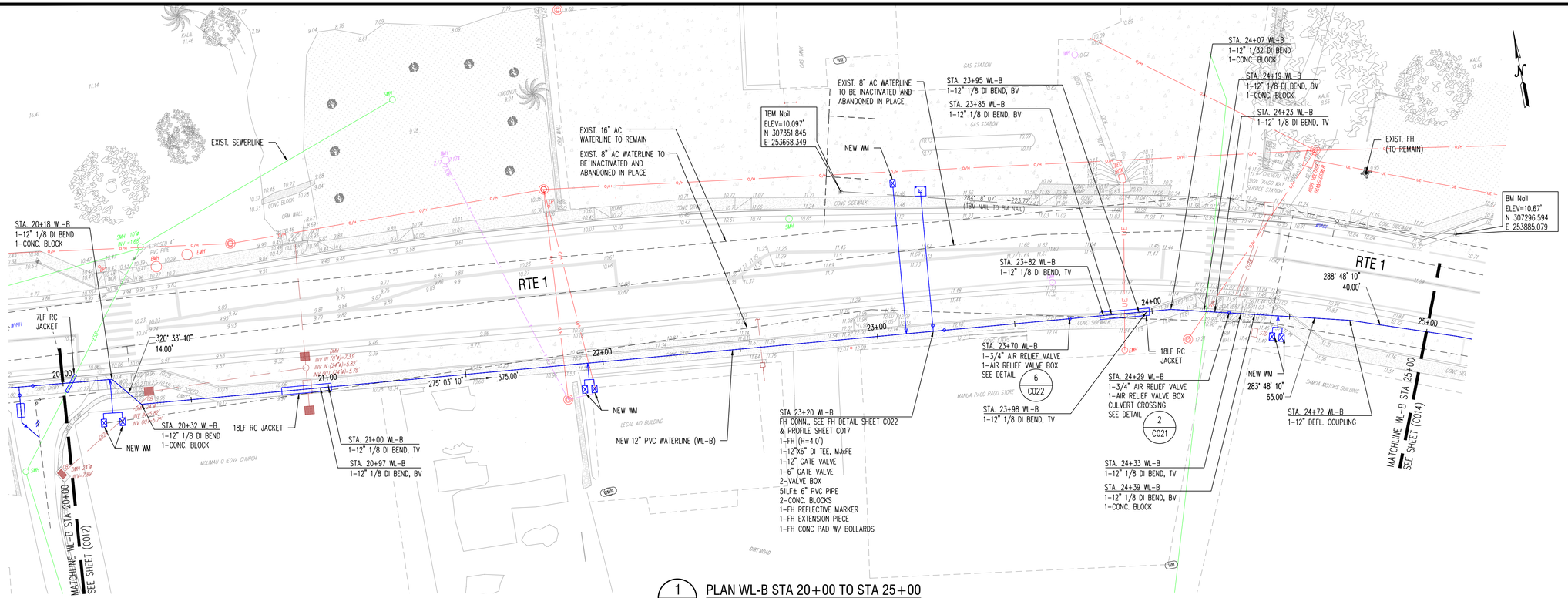

1 C013 PLAN WL-B STA 20+00 TO STA 25+00
SCALE: 1" = 20'

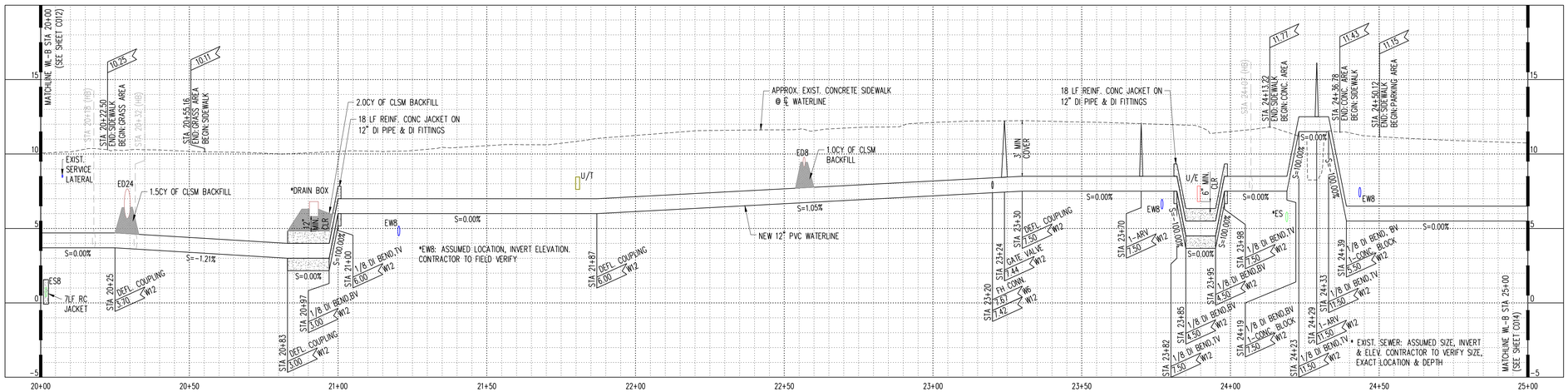

2 C013 PROFILE WL-B STA 20+00 TO STA 25+00
SCALE: HOR. 1" = 20'
VERT. 1" = 4'

NOTE:

1. CONTRACTOR SHALL RESTORE TO THEIR ORIGINAL CONDITION ALL IMPROVEMENTS DAMAGED AS A RESULT OF THE CONSTRUCTION INCLUDING BUT NOT LIMITED TO PAVEMENTS, SIDEWALK, EMBANKMENTS, CURBS, GUTTERS, CURB RAMPS, SIGNS, LANDSCAPING, STRUCTURES, UTILITIES, WALLS, FENCES, ETC. MATCH EXISTING INCLUDING FINISHING.
2. CONTRACTOR TO VERIFY EXACT LOCATION & DEPTH OF EXISTING UTILITIES

LEGEND

- A — DEMOLISH EXISTING WMH. SALVAGE WMH FRAME & COVER.
- B — DEMOLISH & REMOVE EXIST FH. SALVAGE EXIST FH HEAD AND VB FRAME AND COVER. DEMOLISH EXIST FH RISER, VALVESTAND PIPE, FH CURB GUARD AND FH MARKER. SEE DETAIL 5 C022
- C — DEMOLISH EXISTING VB. SALVAGE VB FRAME & COVER.

NOTES:

1. CONTRACTOR SHALL RESTORE TO THEIR ORIGINAL CONDITION ALL IMPROVEMENTS DAMAGED AS A RESULT OF THE CONSTRUCTION INCLUDING BUT NOT LIMITED TO PAVEMENTS, SIDEWALK, EMBANKMENTS, CURBS, CURB RAMPS, SIGNS, LANDSCAPING, STRUCTURES, UTILITIES, WALLS, FENCES, BUS STOP, BUS PAD, ETC. MATCH EXISTING INCLUDING FINISHING.

GRAPHICAL SCALE:

4' 0 4' 8' 12'
SCALE: 1"=4'

20' 0 20' 40' 60'
SCALE: 1"=20'

THIS DOCUMENT IS RELEASED FOR THE PURPOSE OF REVIEW UNDER THE AUTHORITY OF GARY COOKER STATE OF HAWAII 8/3688-C IT IS NOT TO BE USED FOR CONSTRUCTION.

EXP DATE: 04/30/24

REVISION	BY	CHECKED BY	APR.	DATE

PREPARED BY:
CHECKED BY:
APPROVED BY:
ISSUE FOR:

AMERICAN SAMOA POWER AUTHORITY

ASPA WATER ENGINEERING DIVISION
TAFUNA, AMERICAN SAMOA
P.O.BOX PPB, PAGO PAGO AM SAMOA 96799.
TEL(684) 699-1333, FAX (684) 699-4035

PROJECT: ASBESTOS CEMENT PIPE REPLACEMENT AND WATER SYSTEM UPGRADE PROJECT - PAGO SITE

DRAWING TITLE: WATERLINE B - PLAN AND PROFILE
STATION 20+00 TO STATION 25+00

PROJECT LOCATION: PAGO PAGO, TUTUILA ISLAND AMERICAN SAMOA

SCALE: AS SHOWN
PROJECT NO: --
DATE: MAY 2023
SHEET NO. C013

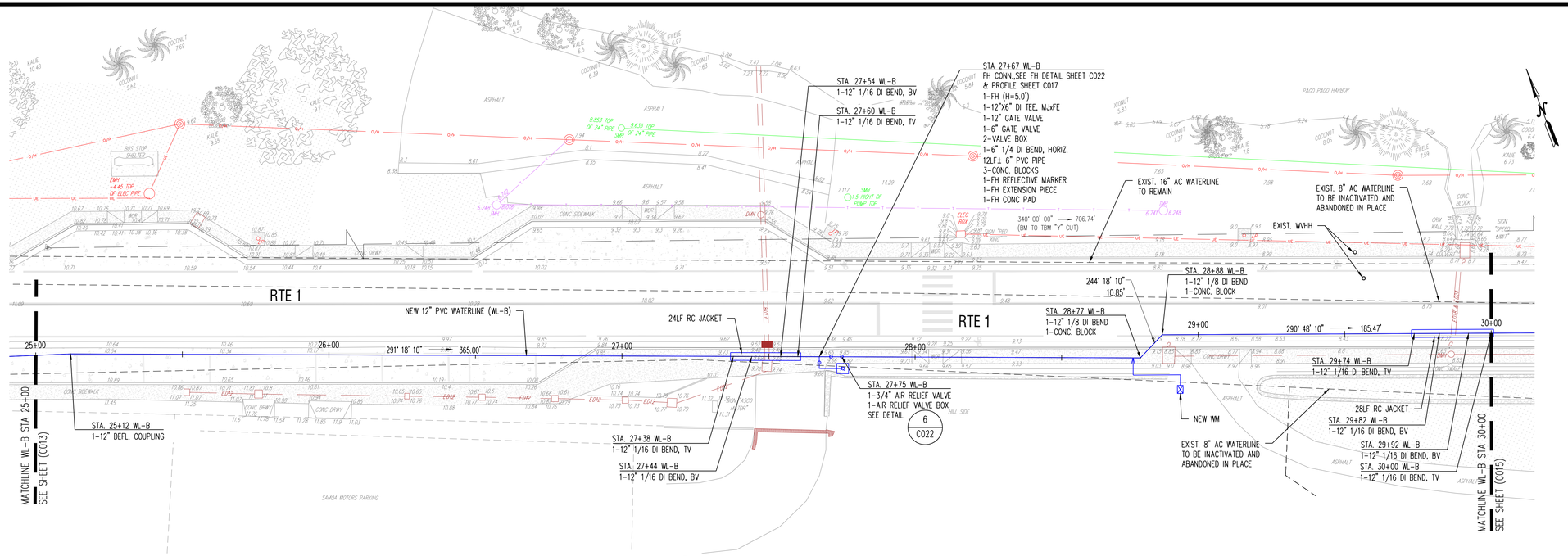

1 C014 PLAN WL-B (STA 25+00 TO STA 30+00)
SCALE: 1" = 20'

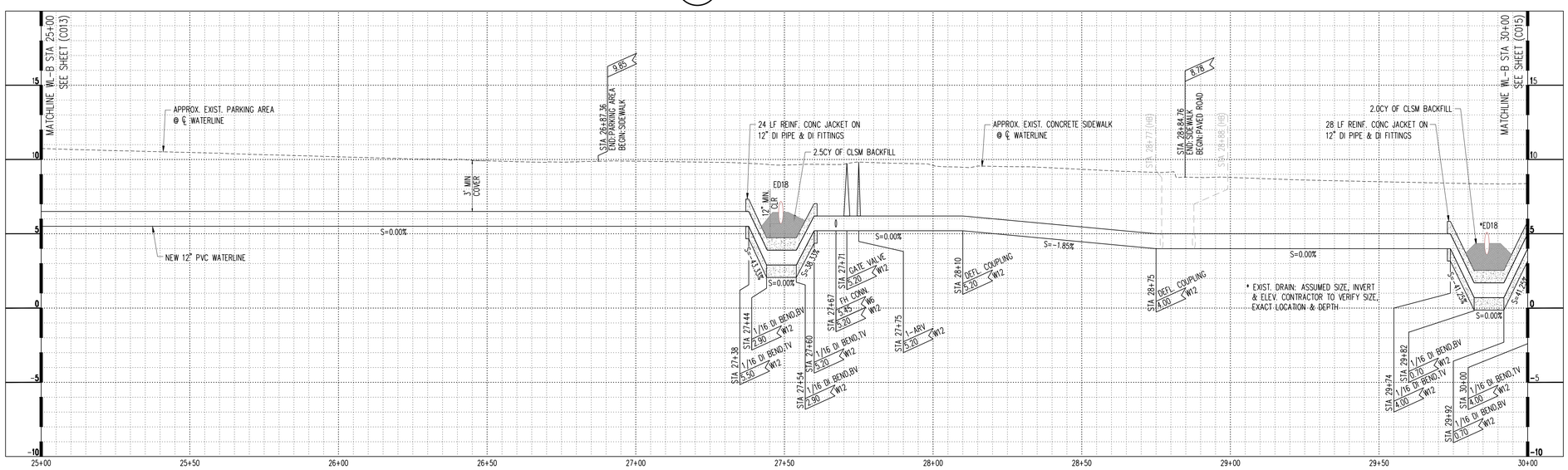

2 C014 PROFILE WL-B (STA 25+00 TO STA 30+00)
SCALE: HOR. 1" = 20'
VERT. 1" = 4'

NOTE:

1. CONTRACTOR SHALL RESTORE TO THEIR ORIGINAL CONDITION ALL IMPROVEMENTS DAMAGED AS A RESULT OF THE CONSTRUCTION INCLUDING BUT NOT LIMITED TO PAVEMENTS, SIDEWALK, EMBANKMENTS, CURBS, GUTTERS, CURB RAMPS, SIGNS, LANDSCAPING, STRUCTURES, UTILITIES, WALLS, FENCES, ETC. MATCH EXISTING INCLUDING FINISHING.
2. CONTRACTOR TO VERIFY EXACT LOCATION & DEPTH OF EXISTING UTILITIES

LEGEND

A	DEMOLISH EXISTING WMH. SALVAGE WMH FRAME & COVER.
B	DEMOLISH & REMOVE EXIST FH. SALVAGE EXIST FH HEAD AND VB FRAME AND COVER. DEMOLISH EXIST FH RISER, VALVESTAND PIPE, FH CURB GUARD AND FH MARKER. SEE DETAIL 5 C022
C	DEMOLISH EXISTING VB. SALVAGE VB FRAME & COVER.

NOTES:

1. CONTRACTOR SHALL RESTORE TO THEIR ORIGINAL CONDITION ALL IMPROVEMENTS DAMAGED AS A RESULT OF THE CONSTRUCTION INCLUDING BUT NOT LIMITED TO PAVEMENTS, SIDEWALK, EMBANKMENTS, CURBS, CURB RAMPS, SIGNS, LANDSCAPING, STRUCTURES, UTILITIES, WALLS, FENCES, BUS STOP, BUS PAD, ETC. MATCH EXISTING INCLUDING FINISHING.

GRAPHICAL SCALE:

4' 0 4' 8' 12'
SCALE: 1"=4'
20' 0 20' 40' 60'
SCALE: 1"=20'

THIS DOCUMENT IS RELEASED FOR THE PURPOSE OF REVIEW UNDER THE AUTHORITY OF JAMES GOODWER STATE OF HAWAII #23689-C IT IS NOT TO BE USED FOR CONSTRUCTION.

EXP. DATE: 04/30/24

REVISION	BY	CHECKED BY	APR.	DATE

PREPARED BY:
CHECKED BY:
APPROVED BY:
ISSUE FOR:

ASPA
AMERICAN SAMOA POWER AUTHORITY

ASPA WATER ENGINEERING DIVISION
TAFUNA, AMERICAN SAMOA
P.O.BOX PPB, PAGO PAGO AM SAMOA 96799.
TEL(684) 699-1333, FAX (684) 699-4035

PROJECT: ASBESTOS CEMENT PIPE REPLACEMENT AND WATER SYSTEM UPGRADE PROJECT - PAGO SITE

DRAWING TITLE: WATERLINE B - PLAN AND PROFILE
STATION 25+00 TO STATION 30+00

PROJECT LOCATION: PAGO PAGO, TUTUILA ISLAND AMERICAN SAMOA

SCALE: AS SHOWN
PROJECT NO: --
DATE: MAY 2023
SHEET NO. C014

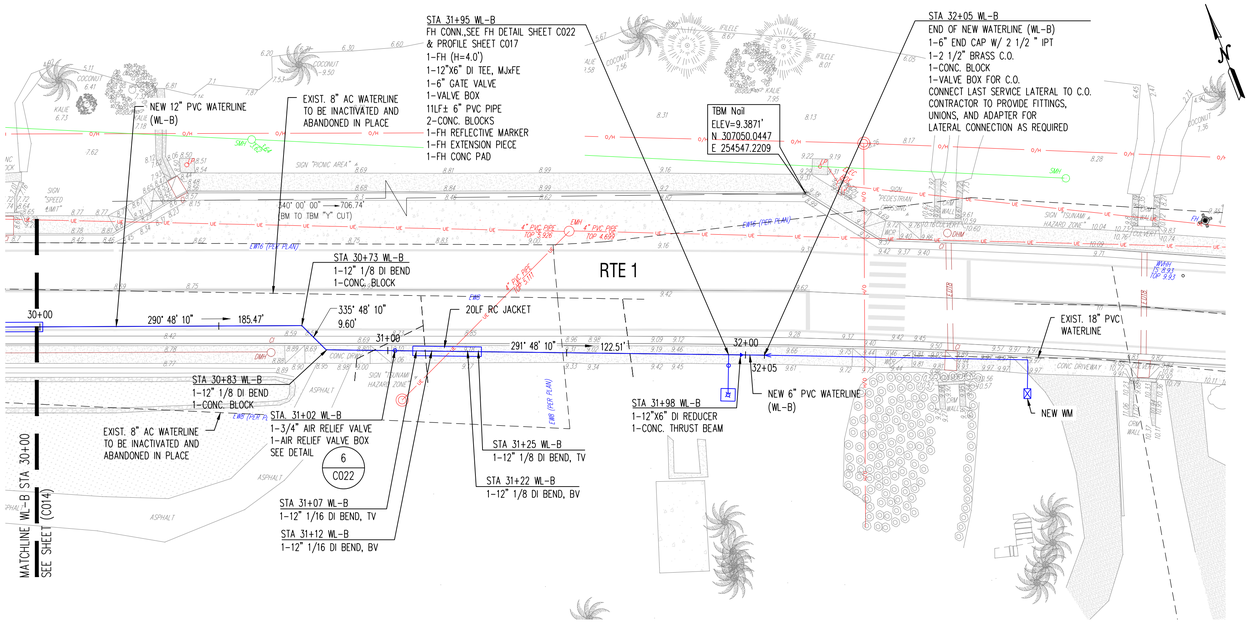

1 / C015 PLAN WL-B (STA 30+00 TO STA 32+05)
SCALE: 1" = 20'

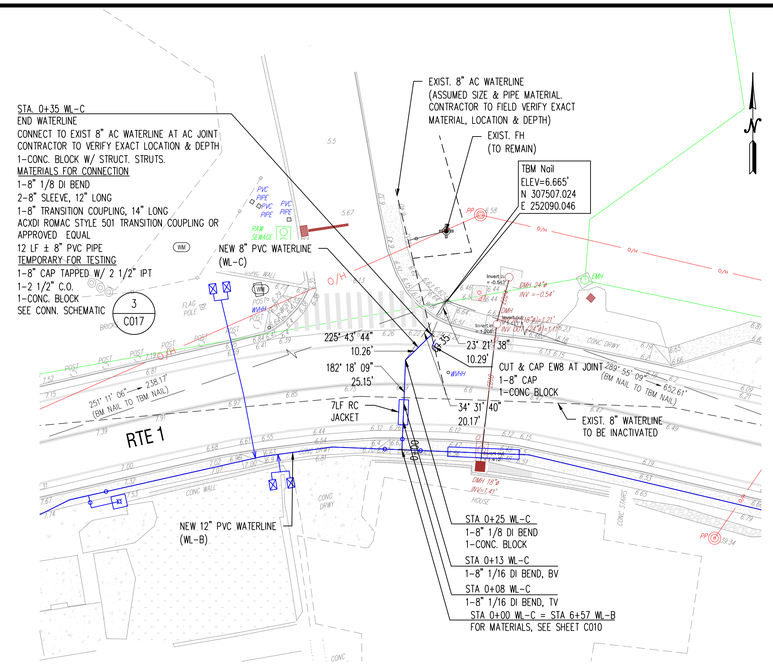

3 / C015 PLAN WL-C (STA 0+00 TO STA 0+35)
SCALE: 1" = 20'

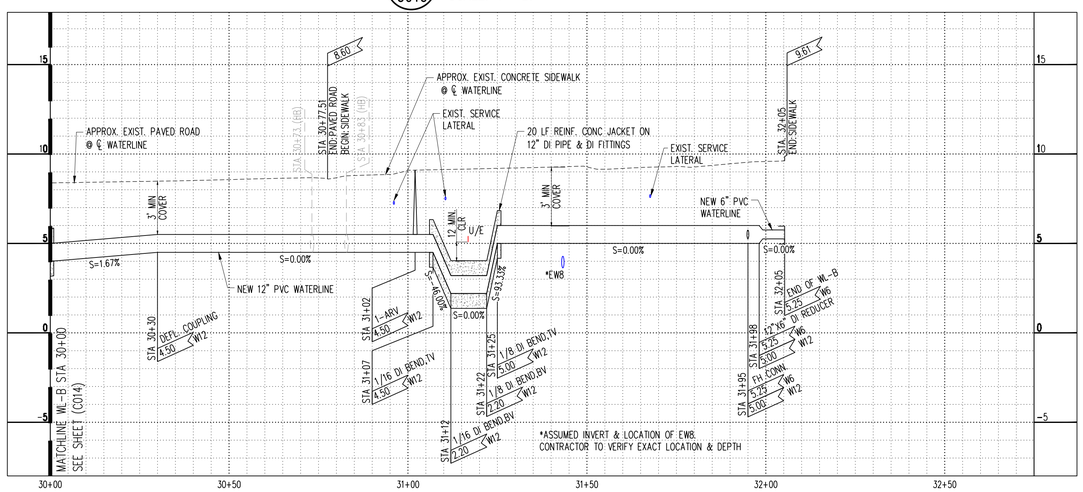

2 / C015 PROFILE WL-B (STA 30+00 TO STA 32+05)
SCALE: HOR. 1" = 20'
VERT. 1" = 4'

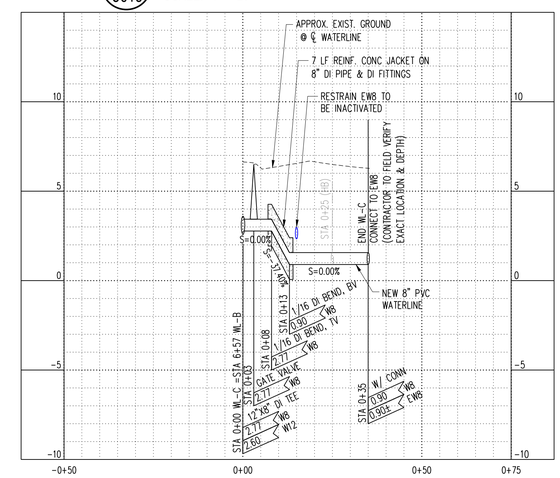

4 / C015 PROFILE WL-C (STA 0+00 TO STA 0+35)
SCALE: HOR. 1" = 20'
VERT. 1" = 4'

NOTE:

1. CONTRACTOR SHALL RESTORE TO THEIR ORIGINAL CONDITION ALL IMPROVEMENTS DAMAGED AS A RESULT OF THE CONSTRUCTION INCLUDING BUT NOT LIMITED TO PAVEMENTS, SIDEWALK, EMBANKMENTS, CURBS, GUTTERS, CURB RAMPS, SIGNS, LANDSCAPING, STRUCTURES, UTILITIES, WALLS, FENCES, ETC. MATCH EXISTING INCLUDING FINISHING.
2. CONTRACTOR TO VERIFY EXACT LOCATION & DEPTH OF EXISTING UTILITIES

LEGEND

- A — DEMOLISH EXISTING WMH. SALVAGE WMH FRAME & COVER.
- B — DEMOLISH & REMOVE EXIST FH. SALVAGE EXIST FH HEAD AND VB FRAME AND COVER. DEMOLISH EXIST FH RISER, VALVESTAND PIPE, FH CURB GUARD AND FH MARKER. SEE DETAIL 5 / C022
- C — DEMOLISH EXISTING VB. SALVAGE VB FRAME & COVER.

NOTES:

1. CONTRACTOR SHALL RESTORE TO THEIR ORIGINAL CONDITION ALL IMPROVEMENTS DAMAGED AS A RESULT OF THE CONSTRUCTION INCLUDING BUT NOT LIMITED TO PAVEMENTS, SIDEWALK, EMBANKMENTS, CURBS, CURB RAMPS, SIGNS, LANDSCAPING, STRUCTURES, UTILITIES, WALLS, FENCES, BUS STOP, BUS PAD, ETC. MATCH EXISTING INCLUDING FINISHING.

GRAPHICAL SCALE:

4' 0 4' 8' 12'
SCALE: 1"=4'

20' 0 20' 40' 60'
SCALE: 1"=20'

THIS DOCUMENT IS RELEASED FOR THE PURPOSE OF REVIEW UNDER THE AUTHORITY OF GARY GOOKER STATE OF HAWAII #13688-C IT IS NOT TO BE USED FOR CONSTRUCTION.

EXP DATE: 04/30/24

REVISION	BY	CHECKED BY	APR.	DATE

PREPARED BY:
CHECKED BY:
APPROVED BY:
ISSUE FOR:

AMERICAN SAMOA POWER AUTHORITY

ASPA WATER ENGINEERING DIVISION
TAFUNA, AMERICAN SAMOA
P.O.BOX PPB, PAGO PAGO AM SAMOA 96799.
TEL(684) 699-1333, FAX (684) 699-4035

PROJECT: ASBESTOS CEMENT PIPE REPLACEMENT AND WATER SYSTEM UPGRADE PROJECT - PAGO SITE

DRAWING TITLE: WATERLINE B - PLAN AND PROFILE STATION 30+00 TO STATION 32+05
WATERLINE C - PLAN AND PROFILE STATION 0+00 TO STATION 0+35

PROJECT LOCATION: PAGO PAGO, TUTUILA ISLAND AMERICAN SAMOA

SCALE: AS SHOWN
PROJECT NO: --
DATE: MAY 2023
SHEET NO. C015

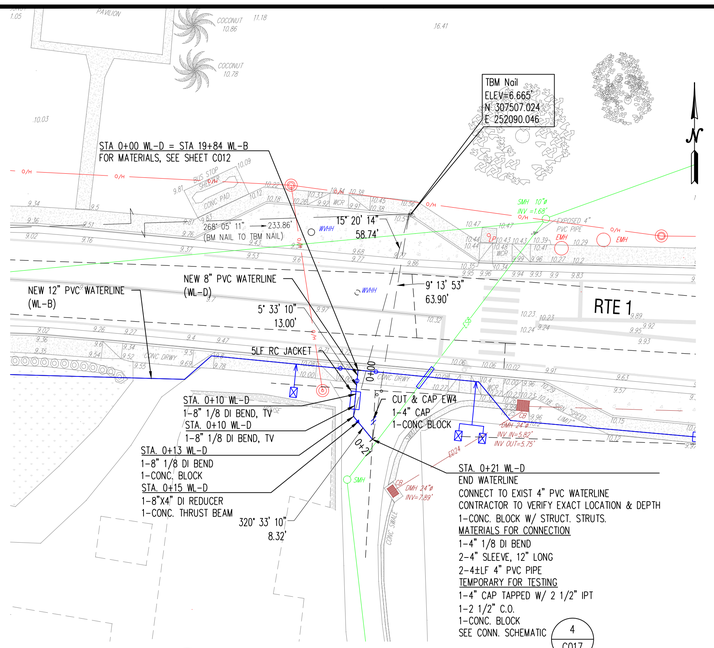

1 C016 PLAN WL-D (STA 0+00 TO STA 0+21)
SCALE: 1" = 20'

NOTE:

1. CONTRACTOR SHALL RESTORE TO THEIR ORIGINAL CONDITION ALL IMPROVEMENTS DAMAGED AS A RESULT OF THE CONSTRUCTION INCLUDING BUT NOT LIMITED TO PAVEMENTS, SIDEWALK, EMBANKMENTS, CURBS, GUTTERS, CURB RAMPS, SIGNS, LANDSCAPING, STRUCTURES, UTILITIES, WALLS, FENCES, ETC. MATCH EXISTING INCLUDING FINISHING.
2. CONTRACTOR TO VERIFY EXACT LOCATION & DEPTH OF EXISTING UTILITIES

LEGEND

A	DEMOLISH EXISTING WMH. SALVAGE WMH FRAME & COVER.
B	DEMOLISH & REMOVE EXIST FH. SALVAGE EXIST FH HEAD AND VB FRAME AND COVER. DEMOLISH EXIST FH RISER, VALVESTAND PIPE, FH CURB GUARD AND FH MARKER. SEE DETAIL 5 C022
C	DEMOLISH EXISTING VB. SALVAGE VB FRAME & COVER.

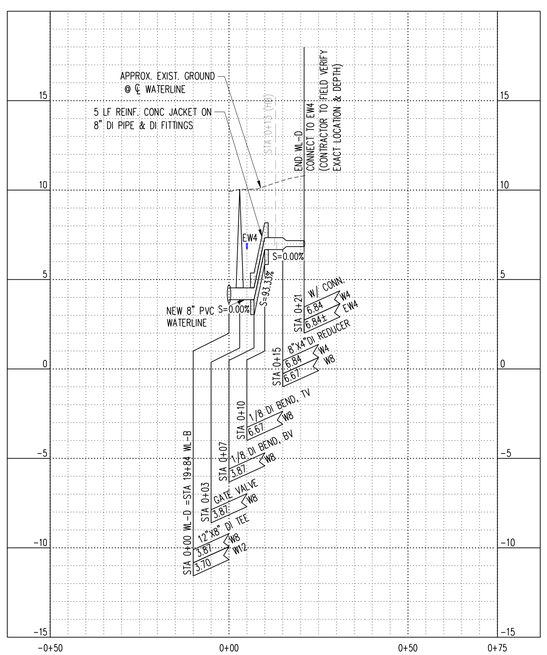

2 C016 PROFILE WL-D (STA 0+00 TO STA 0+21)
SCALE: HOR. 1" = 20'
VERT. 1" = 4'

NOTES:

1. CONTRACTOR SHALL RESTORE TO THEIR ORIGINAL CONDITION ALL IMPROVEMENTS DAMAGED AS A RESULT OF THE CONSTRUCTION INCLUDING BUT NOT LIMITED TO PAVEMENTS, SIDEWALK, EMBANKMENTS, CURBS, CURB RAMPS, SIGNS, LANDSCAPING, STRUCTURES, UTILITIES, WALLS, FENCES, BUS STOP, BUS PAD, ETC. MATCH EXISTING INCLUDING FINISHING.

GRAPHICAL SCALE:

4' 0 4' 8' 12'
SCALE: 1"=4'

20' 0 20' 40' 60'
SCALE: 1"=20'

THIS DOCUMENT IS NOT VALID FOR THE PURPOSE OF REVIEW UNDER THE AUTHORITY OF GREY GOOVER STATE OF HAWAII #13689-C IT IS NOT TO BE USED FOR CONSTRUCTION.

EXP DATE: 04/30/24

REVISION	BY	CHECKED BY	APR.	DATE

PREPARED BY:
CHECKED BY:
APPROVED BY:
ISSUE FOR:

AMERICAN SAMOA POWER AUTHORITY

ASPA WATER ENGINEERING DIVISION
TAFUNA, AMERICAN SAMOA
P.O.BOX PPB, PAGO PAGO AM SAMOA 96799.
TEL(684) 699-1333, FAX (684) 699-4035

PROJECT: ASBESTOS CEMENT PIPE REPLACEMENT AND WATER SYSTEM UPGRADE PROJECT - PAGO SITE

DRAWING TITLE: WATERLINE D- PLAN AND PROFILE STATION 0+00 TO STATION 0+21

PROJECT LOCATION: PAGO PAGO, TUTUILA ISLAND AMERICAN SAMOA

SCALE: AS SHOWN
PROJECT NO.: --
DATE: MAY 2023
SHEET NO.: C016

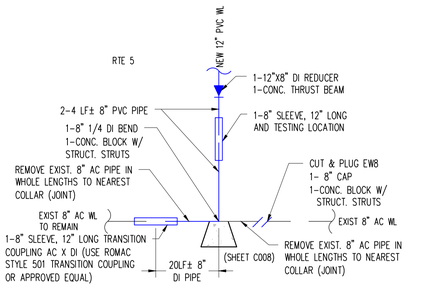

1 C017 CONNECTION SCHEMATIC LAYOUT
STA 0+00 WL-A (RTE 5)
NOT TO SCALE

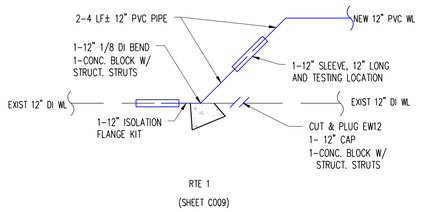

2 C017 CONNECTION SCHEMATIC LAYOUT
STA 0+00 WL-B (RTE 1)
NOT TO SCALE

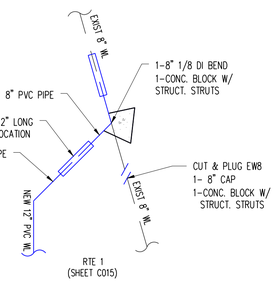

3 C017 CONNECTION SCHEMATIC LAYOUT
STA 0+00 WL-C (RTE 1)
NOT TO SCALE

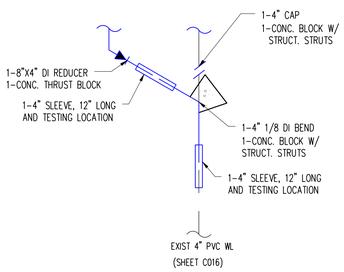

4 C017 CONNECTION SCHEMATIC LAYOUT
STA 0+00 WL-D (RTE 1)
NOT TO SCALE

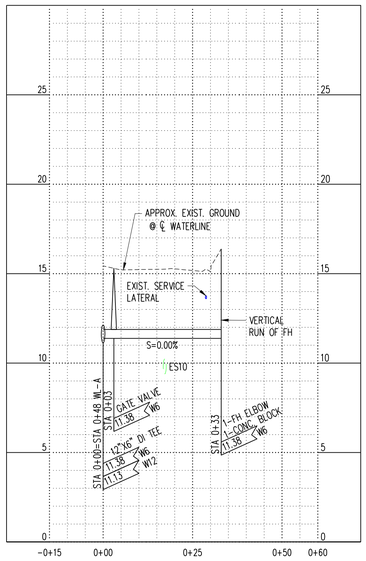

5 C017 FH CONN. @ STA 0+48 WL-A
SCALE: HOR. 1" = 20'
VERT. 1" = 4'

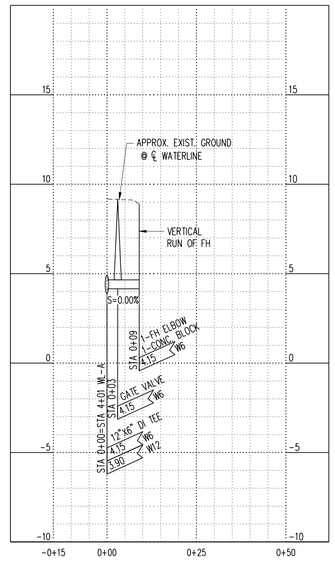

6 C017 FH CONN. @ STA 4+01 WL-A
SCALE: HOR. 1" = 20'
VERT. 1" = 4'

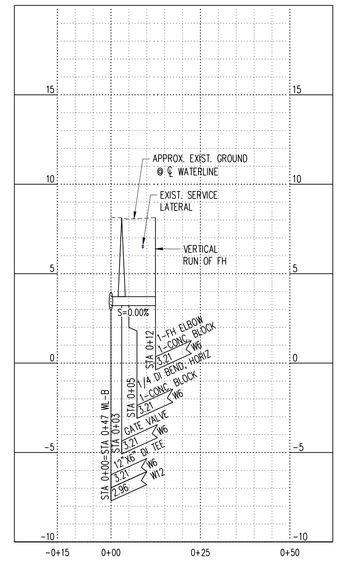

7 C017 FH CONN. @ STA 0+47 WL-B
SCALE: HOR. 1" = 20'
VERT. 1" = 4'

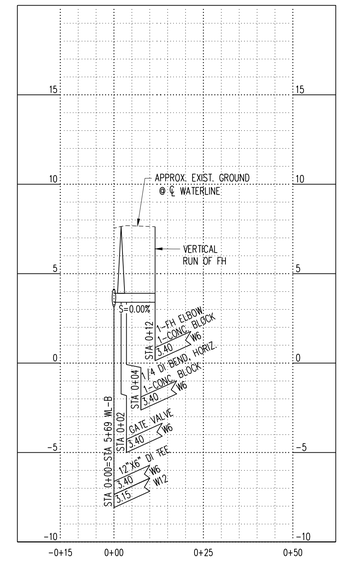

8 C017 FH CONN. @ STA 5+69 WL-B
SCALE: HOR. 1" = 20'
VERT. 1" = 4'

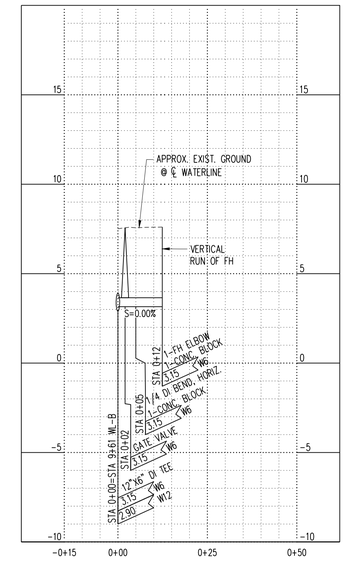

9 C017 FH CONN. @ STA 9+61 WL-B
SCALE: HOR. 1" = 20'
VERT. 1" = 4'

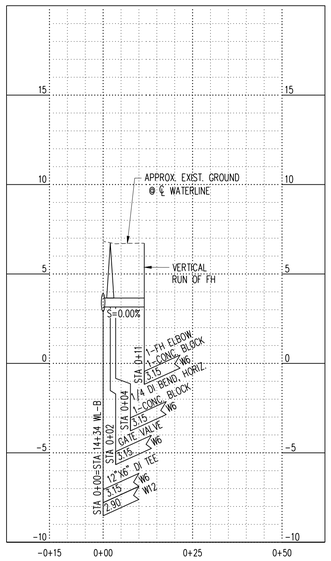

10 C017 FH CONN. @ STA 14+34 WL-B
SCALE: HOR. 1" = 20'
VERT. 1" = 4'

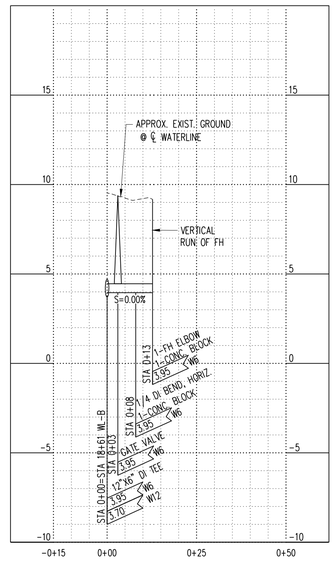

11 C017 FH CONN. @ STA 18+61 WL-B
SCALE: HOR. 1" = 20'
VERT. 1" = 4'

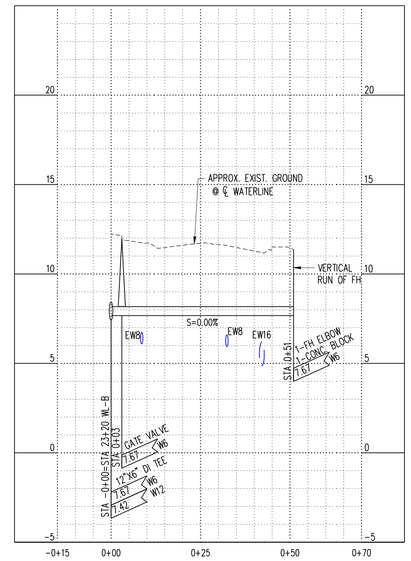

12 C017 FH CONN. @ STA 23+20 WL-B
SCALE: HOR. 1" = 20'
VERT. 1" = 4'

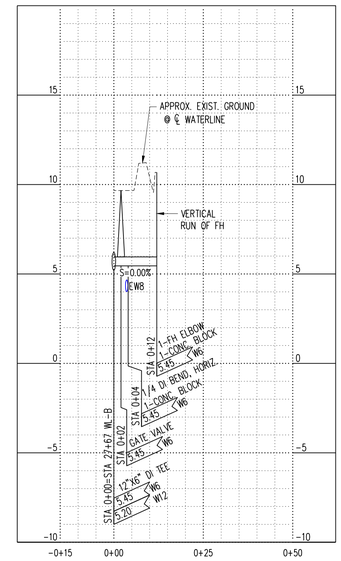

13 C017 FH CONN. @ STA 27+67 WL-B
SCALE: HOR. 1" = 20'
VERT. 1" = 4'

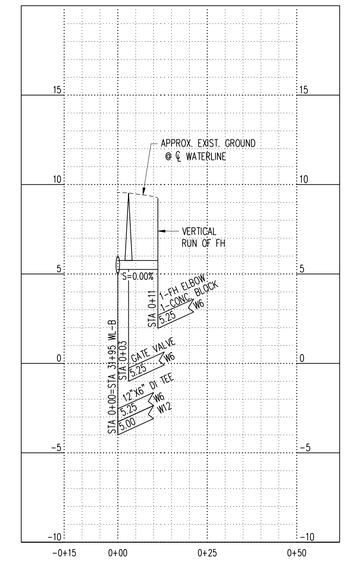

14 C017 FH CONN. @ STA 31+95 WL-B
SCALE: HOR. 1" = 20'
VERT. 1" = 4'

GRAPHICAL SCALE:

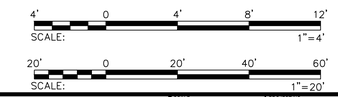

THIS DOCUMENT IS RELEASED FOR THE PURPOSE OF REVIEW UNDER THE AUTHORITY OF GARY COOVER STATE OF HAWAII 22589-C IT IS NOT TO BE USED FOR CONSTRUCTION

EXP DATE: 04/30/24

REVISION	BY	CHECKED BY	APR.	DATE

PREPARED BY:
CHECKED BY:
APPROVED BY:
ISSUE FOR:

AMERICAN SAMOA POWER AUTHORITY

ASPA WATER ENGINEERING DIVISION
TAFUNA, AMERICAN SAMOA
P.O.BOX PPB, PAGO PAGO AM SAMOA 96799.
TEL(684) 699-1333, FAX (684) 699-4035

PROJECT: ASBESTOS CEMENT PIPE REPLACEMENT AND WATER SYSTEM UPGRADE PROJECT - PAGO SITE

DRAWING TITLE: FH PROFILE AND CONNECTION SCHEMATIC LAYOUT

PROJECT LOCATION: PAGO PAGO, TUTUILA ISLAND AMERICAN SAMOA

SCALE: AS SHOWN

PROJECT NO: --

DATE: MAY 2023

SHEET NO. C017

NATIONAL POLLUTANT DISCHARGE ELIMINATION SYSTEM (NPDES) GENERAL NOTES

A. EROSION AND SEDIMENT CONTROL INSPECTION AND MAINTENANCE PRACTICES.

1. THE CONTRACTOR SHALL INSPECT THE EROSION AND SEDIMENT CONTROL MEASURES AT LEAST ONCE A WEEK OR AFTER 0.5 INCHES OF RAINFALL.

2. THE CONTRACTOR SHALL MAINTAIN THE EROSION AND SEDIMENT CONTROL MEASURES ACCORDING TO THE CONTRACT. IF A REPAIR IS NECESSARY, THE CONTRACTOR SHALL INITIATE THE REPAIRS WITHIN TWENTY-FOUR (24) HOURS AFTER THE INSPECTION SUCH AS:

   a. WHEN SEDIMENT BUILD-UP REACHES ONE-THIRD (1/3) THE HEIGHT OF THE SILT FENCE, THE CONTRACTOR SHALL REMOVE AND DISPOSE OF THE SEDIMENT BUILD-UP FROM THE SILT FENCE.

   b. WHEN TEARS ARE FOUND ON THE SILT FENCE, THE CONTRACTOR SHALL REPLACE THE FABRIC.

   c. THE CONTRACTOR SHALL CHECK TO SEE IF THE FABRIC IS SECURELY ATTACHED TO THE FENCE POSTS AND TO SEE THE FENCE POST ARE FIRMLY IN THE GROUND.

   d. THE CONTRACTOR SHALL INSPECT THE DIVERSION DIKE AND REPAIR THE BREACHES.

   e. THE CONTRACTOR SHALL INSPECT TEMPORARY AND PERMANENT SEEDING AND PLANTING FOR BARE SPOTS, WASHOUTS, AND HEALTHY GROWTH.

THE CONTRACTOR SHALL HAVE ITS PERSONNEL MAKE MAINTENANCE INSPECTION REPORT PROMPTLY AFTER EACH INSPECTION. THE CONTRACTOR SHALL SELECT A MINIMUM OF THREE (3) PERSONNEL WHO WILL BE RESPONSIBLE FOR INSPECTION, MAINTENANCE, REPAIR ACTIVITIES, AND FILLING OUT THE INSPECTION AND MAINTENANCE REPORT. PERSONNEL SELECTED FOR INSPECTION AND MAINTENANCE RESPONSIBILITIES WILL RECEIVE TRAINING FROM THE CONTRACTOR. THE CONTRACTOR SHALL TRAIN THESE PERSONNEL IN THE INSPECTION AND MAINTENANCE PRACTICES NECESSARY FOR KEEPING THE EROSION AND SEDIMENT USED ONSITE ACCORDING TO THE CONTRACT. THE COST OF TRAINING, INSPECTING AND MAINTAINING EROSION AND SEDIMENT CONTROL MEASURES SHALL BE AT NO COST TO ASPA.

B. SUBMITTAL REQUIREMENTS:

1. NO CONSTRUCTION ACTIVITIES WILL BE AUTHORIZED UNTIL THE CONTRACTOR'S SITE SPECIFIC BMP HAS BEEN APPROVED BY THE PNRS.

2. CONSTRUCTION ACTIVITIES DEWATERING AND/OR HYDROTESTING WATER.

   a. DISCHARGES INTO STATE WATERS DUE TO DEWATERING AND/ OR HYDROTESTING ACTIVITIES WILL REQUIRE NPDES PERMIT(S) FROM DOH. IF THE CONTRACTOR OPTIONS TO DISCHARGE DEWATERING AND/OR HYDROTESTING EFFLUENT INTO STATE WATERS, THE CONTRACTOR SHALL SUBMIT TO THE ENGINEER FOUR (4) SETS OF SITE-SPECIFIC DEWATERING AND/OR HYDROTESTING BMP, AND FOUR (4) COPIES OF THE QUALITY OF DISCHARGE TEST RESULTS. THE PLANS AND TEST RESULTS SHALL BE SUBMITTED NO LATER THAN THIRTY (30) CALENDAR DAYS AFTER THE AWARD OF CONTRACT.

   b. NO DEWATERING AND/OR HYDROTESTING ACTIVITIES WILL BE AUTHORIZED UNTIL THE RECEIPT OF THE NPDES PERMIT(S) FROM DOH.

WATER POLLUTION AND EROSION CONTROL NOTES:

A. GENERAL:

1. FOLLOW THE GUIDELINES IN THE CURRENT DPW CONSTRUCTION BEST MANAGEMENT PRACTICES FIELD MANUAL IN DEVELOPING, INSTALLING AND MAINTAINING THE BEST MANAGEMENT PRACTICES (BMP) FOR THE PROJECT. FOR ANY CONFLICTING REQUIREMENTS BETWEEN THE MANUAL AND APPLICABLE BID DOCUMENTS, THE APPLICABLE BID DOCUMENTS WILL GOVERN. SHOULD A REQUIREMENT NOT BE CLEARLY DESCRIBED WITHIN THE APPLICABLE BID DOCUMENTS, THE CONTRACTOR SHALL NOTIFY THE ENGINEER IMMEDIATELY FOR INTERPRETATION. FOR THE PURPOSES OF CLARIFICATION UNDER NOTE A.2, "APPLICABLE BID DOCUMENTS" INCLUDE THE CONSTRUCTION PLANS, STANDARD SPECIFICATIONS, SPECIAL PROVISIONS, PERMITS, AND THE STORM WATER POLLUTION PREVENTION PLAN (SWPPP) WHEN APPLICABLE.

2. THE ENGINEER WILL DEDUCT THE COST FROM THE PROGRESS PAYMENT FOR ALL CITATIONS RECEIVED BY THE DEPARTMENT FOR NON-COMPLIANCE, OR THE CONTRACTOR SHALL REIMBURSE ASPA FOR THE FULL AMOUNT OF THE OUTSTANDING COST INCURRED BY THE ASPA.

3. IF NECESSARY, INSTALL A RAIN GAGE PRIOR TO ANY FIELD WORK INCLUDING THE INSTALLATION OF ANY SITE-SPECIFIC BEST MANAGEMENT PRACTICES. THE RAIN GAGE SHALL HAVE A TOLERANCE OF AT LEAST 0.05 INCHES OF RAINFALL. INSTALL THE RAIN GAGE ON THE PROJECT SITE IN AN AREA THAT WILL NOT DETER RAINFALL FROM ENTERING THE GAGE OPENING. DO NOT INSTALL IN A LOCATION WHERE RAIN WATER MAY SPLASH INTO RAIN GAGE. THE RAIN GAGE INSTALLATION SHALL BE STABLE AND PLUMBED. DO NOT BEGIN FIELD WORK UNTIL THE RAIN GAGE IS INSTALLED AND SITE-SPECIFIC BEST MANAGEMENT PRACTICES ARE IN-PLACE.

4. SUBMIT SITE-SPECIFIC BMP PLAN TO THE ENGINEER ALONG WITH A COMPLETED SITE-SPECIFIC BMP REVIEW CHECKLIST WITHIN 30 CALENDAR DAYS OF CONTRACT EXECUTION. THE SITE-SPECIFIC BMP REVIEW CHECKLIST MAY BE OBTAINED FROM ASPA

B. WASTE DISPOSAL:

1. WASTE MATERIALS

   COLLECT AND STORE ALL WASTE MATERIALS IN A SECURELY LIDDED METAL DUMPSTER OR ROLL OFF CONTAINER WITH COVER TO KEEP RAIN OUT OR LOSS OF WASTE DURING WINDY CONDITIONS. THE DUMPSTER SHALL MEET ALL LOCAL AND STATE SOLID WASTE MANAGEMENT REGULATIONS. DEPOSIT ALL TRASH AND CONSTRUCTION DEBRIS FROM THE SITE IN THE DUMPSTER. EMPTY THE DUMPSTER WEEKLY OR WHEN THE CONTAINER IS TWO-THIRDS FULL, WHICHEVER IS SOONER. DO NOT BURY CONSTRUCTION WASTE MATERIALS ONSITE. THE CONTRACTOR'S SUPERVISORY PERSONNEL SHALL BE INSTRUCTED REGARDING THE CORRECT PROCEDURE FOR WASTE DISPOSAL. POST NOTICES STATING THESE PRACTICES IN THE OFFICE TRAILER, ON A WATERPROOF BULLETIN BOARD, OR OTHER ACCESSIBLE LOCATION ACCEPTABLE TO THE ENGINEER. THE CONTRACTOR SHALL BE RESPONSIBLE FOR SEEING THAT THESE PROCEDURES ARE FOLLOWED. SUBMIT THE SOLID WASTE DISCLOSURE FORM FOR CONSTRUCTION SITES TO THE ENGINEER WITHIN 30 CALENDAR DAYS OF CONTRACT EXECUTION. PROVIDE A COPY OF ALL THE DISPOSAL RECEIPTS FROM THE FACILITY PERMITTED BY THE DEPARTMENT OF HEALTH TO RECEIVE SOLID WASTE TO THE ENGINEER MONTHLY. THIS SHOULD ALSO INCLUDE DOCUMENTATION FROM ANY INTERMEDIARY FACILITY WHERE SOLID WASTE IS HANDLED OR PROCESSED.

2. HAZARDOUS WASTE
   DISPOSE ALL HAZARDOUS WASTE MATERIALS IN THE MANNER SPECIFIED BY LOCAL OR STATE REGULATIONS AND BY THE MANUFACTURER. THE CONTRACTOR'S SITE PERSONNEL SHALL BE INSTRUCTED IN THESE PRACTICES AND SHALL BE RESPONSIBLE FOR SEEING THAT THESE PRACTICES ARE FOLLOWED.

3. SANITARY WASTE
   COLLECT ALL SANITARY WASTE FROM THE PORTABLE UNITS A MINIMUM OF ONCE PER WEEK, OR AS REQUIRED. POSITION SANITARY FACILITIES WHERE THEY ARE SECURE AND WILL NOT BE TIPPED OVER OR KNOCKED DOWN.

C. EROSION AND SEDIMENT CONTROL INSPECTION AND MAINTENANCE PRACTICES:

1. FOR ALL CONSTRUCTION ACTIVITIES, INSPECT ALL CONTROL MEASURES WEEKLY.

2. MAINTAIN ALL EROSION AND SEDIMENT CONTROL MEASURES IN GOOD WORKING ORDER. IF REPAIR IS NECESSARY, INITIATE REPAIR IMMEDIATELY AND COMPLETE BY THE CLOSE OF THE NEXT WORK DAY IF THE PROBLEM DOES NOT REQUIRE SIGNIFICANT REPAIR OR REPLACEMENT, OR IF THE PROBLEM CAN BE CORRECTED THROUGH ROUTINE MAINTENANCE. WHEN INSTALLATION OF NEW EROSION OR SEDIMENT CONTROL OR A SIGNIFICANT REPAIR IS NEEDED, INSTALL THE NEW OR MODIFIED CONTROL OR COMPLETE THE REPAIR NO LATER THAN 7 CALENDAR DAYS FROM THE TIME OF DISCOVERY. "IMMEDIATELY" MEANS THE CONTRACTOR SHALL TAKE ALL REASONABLE MEASURES TO MINIMIZE OR PREVENT DISCHARGE OF POLLUTANTS UNTIL A PERMANENT SOLUTION IS INSTALLED AND MADE OPERATIONAL. IF A PROBLEM IS IDENTIFIED AT A TIME IN THE DAY IN WHICH IT IS TOO LATE TO INITIATE REPAIR, INITIATION OF REPAIR SHALL BEGIN ON THE FOLLOWING WORK DAY.

3. REMOVE BUILT-UP SEDIMENT FROM SILT FENCE WHEN IT HAS REACHED ONE-THIRD THE HEIGHT OF THE FENCE. REMOVE SEDIMENT FROM OTHER PERIMETER SEDIMENT CONTROL DEVICES WHEN IT HAS REACHED ONE-HALF THE HEIGHT OF THE DEVICE.

4. INSPECT SILT SCREEN OR FENCE FOR DEPTH OF SEDIMENT, TEARS, TO VERIFY THAT THE FABRIC IS SECURELY ATTACHED TO THE FENCE POSTS OR CONCRETE SLAB AND TO VERIFY THAT THE FENCE POSTS ARE FIRMLY IN THE GROUND. INSPECT AND VERIFY THE BOTTOM OF THE SILT SCREEN IS BURIED A MINIMUM OF 6INCHES BELOW THE EXISTING GROUND.

5. INSPECT TEMPORARY AND PERMANENT SEEDING AND PLANTING FOR BARE SPOTS, WASHOUTS AND HEALTHY GROWTH.

6. COMPLETE AND SUBMIT TO THE ENGINEER A MAINTENANCE INSPECTION REPORT WITHIN 24 HOURS AFTER EACH INSPECTION.

WATER POLLUTION AND EROSION CONTROL NOTES: (CONT)

7. PROVIDE A STABILIZED CONSTRUCTION ENTRANCE AT ALL POINTS OF EXIT ONTO PAVED ROADS TO REDUCE VEHICLE TRACKING OF SEDIMENTS. INCLUDE STABILIZED CONSTRUCTION ENTRANCE IN THE WATER POLLUTION, DUST, AND AND EROSION CONTROL SUBMITTALS. MINIMUM LENGTH SHOULD BE 50 FEET. MINIMUM WIDTH SHOULD BE 30 FEET. MINIMUM DEPTH SHOULD BE 12 INCHES OR AS RECOMMENDED BY THE SOILS ENGINEER AND UNDERLAIN WITH GEO-TEXTILE FABRIC. IF MINIMUM DIMENSIONS CANNOT BE MET, PROVIDE OTHER STABILIZATION TECHNIQUES THAT REMOVE SEDIMENT PRIOR TO EXIT. CLEAN THE PAVED STREET ADJACENT TO THE SITE ENTRANCE DAILY OR AS REQUIRED TO REMOVE ANY EXCESS MUD, COLD-PLANED MATERIALS, DIRT OR ROCK TRACKED FROM THE SITE. DO NOT HOSE DOWN THE STREET WITHOUT CONTAINING OR VACUUMING WASH WATER. COVER DUMP TRUCKS HAULING MATERIAL FROM THE CONSTRUCTION SITE WITH A TARPAULIN. REMOVE SEDIMENT TRACKED ONTO THE STREET, SIDEWALK, OR OTHER PAVED AREA BY THE END OF THE DAY IN WHICH THE TRACK-OUT OCCURS.

8. INCLUDE DESIGNATED CONCRETE WASHOUT AREA(S) IN THE WATER POLLUTION, DUST, AND EROSION CONTROL SUBMITTALS.

9. SUBMIT THE NAME OF A SPECIFIC INDIVIDUAL DESIGNATED RESPONSIBLE FOR INSPECTIONS, MAINTENANCE AND REPAIR ACTIVITIES AND FILLING OUT THE INSPECTION AND MAINTENANCE REPORT.

10. PERSONNEL SELECTED FOR THE INSPECTION AND MAINTENANCE RESPONSIBILITIES SHALL RECEIVE TRAINING FROM THE CONTRACTOR. THEY SHALL BE TRAINED IN ALL THE INSPECTION AND MAINTENANCE PRACTICES NECESSARY FOR KEEPING THE EROSION AND SEDIMENT CONTROLS USED ONSITE IN GOOD WORKING ORDER.

11. CONTAIN, REMOVE AND DISPOSE SLURRY GENERATED FROM SAW CUTTING OF PAVEMENT IN ACCORDANCE WITH APPROVED BMP PRACTICES. DO NOT ALLOW DISCHARGE INTO THE DRAINAGE SYSTEM OR STATE WATERS.

12. FOR CONSTRUCTION ACTIVITIES, COMPLETE INITIAL STABILIZATION WITHIN 14 CALENDAR DAYS AFTER THE TEMPORARY OR PERMANENT CESSATION OF EARTH-DISTURBING ACTIVITIES.

D. GOOD HOUSEKEEPING BEST MANAGEMENT PRACTICES:

1. MATERIALS POLLUTION PREVENTION PLAN
   a. APPLICABLE MATERIALS OR SUBSTANCES LISTED BELOW ARE EXPECTED TO BE PRESENT ONSITE DURING CONSTRUCTION. OTHER MATERIALS AND SUBSTANCES NOT LISTED BELOW SHALL BE ADDED TO THE INVENTORY.

CONCRETE	CLEANING SOLVENTS
DETERGENTS	WOOD
PAINTS (ENAMEL AND LATEX)	MASONRY BLOCK
METAL STUDS	HERBICIDES AND PESTICIDES
TAR	CURING COMPOUNDS
FERTILIZERS	ADHESIVES
PETROLEUM BASED PRODUCTS	

   b. USE MATERIAL MANAGEMENT PRACTICES TO REDUCE THE RISK OF SPILLS OR OTHER ACCIDENTAL EXPOSURE OF MATERIALS AND SUBSTANCES TO STORM WATER RUNOFF. MAKE AN EFFORT TO STORE ONLY ENOUGH PRODUCT AS IS REQUIRED TO DO THE JOB.
   c. STORE ALL MATERIALS STORED ONSITE IN A NEAT, ORDERLY MANNER IN THEIR APPROPRIATE CONTAINERS AND IF POSSIBLE UNDER A ROOF OR OTHER ENCLOSURE.
   d. KEEP PRODUCTS IN THEIR ORIGINAL CONTAINERS WITH THE ORIGINAL MANUFACTURER'S LABEL.
   e. DO NOT MIX SUBSTANCES WITH ONE ANOTHER UNLESS RECOMMENDED BY THE MANUFACTURER.
   f. WHENEVER POSSIBLE, USE A PRODUCT UP COMPLETELY BEFORE DISPOSING OF THE CONTAINER.
   g. FOLLOW MANUFACTURER'S RECOMMENDATIONS FOR PROPER USE AND DISPOSAL.
   h. CONDUCT A DAILY INSPECTION TO ENSURE PROPER USE AND DISPOSAL OF MATERIALS ONSITE.

2. HAZARDOUS MATERIAL POLLUTION PREVENTION PLAN

   a. KEEP PRODUCTS IN ORIGINAL CONTAINERS UNLESS THEY ARE NOT RESEALABLE.
   b. RETAIN ORIGINAL LABELS AND SAFETY DATA SHEETS (SDS), FORMERLY MATERIAL SAFETY DATA SHEETS (MSDS).
   c. DISPOSE OF SURPLUS PRODUCTS ACCORDING TO MANUFACTURERS' INSTRUCTIONS AND LOCAL STATE REGULATIONS.

3. ONSITE AND OFFSITE PRODUCT SPECIFIC PLAN
   THE FOLLOWING PRODUCT SPECIFIC PRACTICES SHALL BE FOLLOWED ONSITE:

   a. PETROLEUM BASED PRODUCTS:
   MONITOR ALL ONSITE VEHICLES FOR LEAKS AND PERFORM REGULAR PREVENTIVE MAINTENANCE TO REDUCE THE CHANCE OF LEAKAGE. STORE PETROLEUM PRODUCTS IN TIGHTLY SEALED CONTAINERS WHICH ARE CLEARLY LABELED. APPLY ASPHALT SUBSTANCES USED ONSITE ACCORDING TO THE MANUFACTURER'S RECOMMENDATION.

   b. FERTILIZERS:
   APPLY FERTILIZERS USED ONLY IN THE MINIMUM AMOUNTS RECOMMENDED BY THE MANUFACTURER AND STATE AND LOCAL REQUIREMENTS. AVOID APPLYING JUST BEFORE A HEAVY RAIN EVENT. APPLY AT THE APPROPRIATE TIME OF YEAR FOR THE LOCATION, AND PREFERABLY TIMED TO COINCIDE AS CLOSELY AS POSSIBLE TO THE PERIOD OF MAXIMUM VEGETATION UPTAKE AND GROWTH. ONCE APPLIED, WORK FERTILIZER INTO THE SOIL TO LIMIT EXPOSURE TO STORM WATER. DO NOT APPLY TO STORM CONVEYANCE CHANNELS WITH FLOWING WATER. STORAGE SHALL BE IN A COVERED SHED OR IN AN AREA WHERE FERTILIZER WILL NOT COME INTO CONTACT WITH PRECIPITATION OR STORMWATER. TRANSFER THE CONTENTS OF ANY PARTIALLY USED BAGS OF FERTILIZER TO A SEALABLE PLASTIC BIN TO AVOID SPILLS.

   c. PAINTS:
   SEAL AND STORE CONTAINERS WHEN NOT REQUIRED FOR USE. DO NOT DISCHARGE EXCESS PAINT TO THE DRAINAGE SYSTEM, SANITARY SEWER SYSTEM, OR STATE WATERS. DISPOSE PROPERLY ACCORDING TO MANUFACTURERS' INSTRUCTIONS AND STATE AND LOCAL REGULATIONS.

   d. CONCRETE TRUCKS:
   WASHOUT OR DISCHARGE CONCRETE TRUCK DRUM WASH WATER ONLY AT A DESIGNATED SITE AS FAR AS PRACTICABLE FROM STORM DRAIN INLETS OR STATE WATERS. DO NOT DISCHARGE WATER IN THE DRAINAGE SYSTEM OR STATE WATERS. DISPOSAL BY PERCOLATION IS PROHIBITED. CLEAN DISPOSAL SITE AS REQUIRED OR AS REQUESTED BY THE ENGINEER.

4. SPILL CONTROL PLAN

   a. POST A SPILL PREVENTION PLAN TO INCLUDE MEASURES TO PREVENT AND CLEAN UP EACH SPILL.
   b. THE CONTRACTOR SHALL BE THE SPILL PREVENTION AND CLEANUP COORDINATOR. DESIGNATE AT LEAST THREE SITE PERSONNEL WHO SHALL RECEIVE SPILL PREVENTION AND CLEANUP TRAINING. THESE INDIVIDUALS SHALL EACH BECOME RESPONSIBLE FOR A PARTICULAR PHASE OR PREVENTION AND CLEANUP. POST THE NAMES OF RESPONSIBLE SPILL PERSONNEL IN THE MATERIAL STORAGE AREA ON A WEATHERPROOF BULLETIN BOARD OR OTHER ACCESSIBLE LOCATION ACCEPTABLE TO THE ENGINEER AND IN THE OFFICE TRAILER ONSITE.
   c. CLEARLY POST MANUFACTURERS' RECOMMENDED METHODS FOR SPILL CLEANUP. MAKE SITE PERSONNEL AWARE OF THE PROCEDURES AND THE LOCATION OF THE INFORMATION AND CLEANUP SUPPLIES.
   d. KEEP AMPLE MATERIALS AND EQUIPMENT NECESSARY FOR SPILL CLEANUP IN THE MATERIAL STORAGE AREA ONSITE.
   e. CLEAN UP ALL SPILLS IMMEDIATELY AFTER DISCOVERY.
   f. KEEP THE SPILL AREA WELL VENTILATED. PERSONNEL SHALL WEAR APPROPRIATE PROTECTIVE CLOTHING TO PREVENT INJURY FROM CONTACT WITH A HAZARDOUS SUBSTANCES.
   g. REPORT SPILLS OF TOXIC HAZARDOUS MATERIAL TO THE APPROPRIATE STATE OR LOCAL GOVERNMENT AGENCY, REGARDLESS OF THE SIZE. WHERE A LEAK, SPILL OR OTHER RELEASE CONTAINING A HAZARDOUS SUBSTANCES OR OIL IN AN AMOUNT EQUAL TO OR IN EXCESS OF A REPORTABLE QUANTITY ESTABLISHED UNDER EITHER 40 CFR PART 110, 40 CFR PART 117, OR 40 CFR PART 302 OCCURS DURING A 24-HOUR PERIOD, THE CONTRACTOR SHALL NOTIFY THE ASPA ENGINEER AS SOON AS THE CONTRACTOR HAS KNOWLEDGE OF THE DISCHARGE. THE CONTRACTOR SHALL ALSO PROVIDE TO THE ENGINEER, WITHIN 7 CALENDAR DAYS OF KNOWLEDGE OF THE RELEASE, A DESCRIPTION OF THE RELEASE, THE CIRCUMSTANCES LEADING TO THE RELEASE, AND THE DATE OF THE RELEASE. THE ENGINEER WILL PROVIDE THIS INFORMATION TO THE AS-DOH. THE ENGINEER WILL PROVIDE INFORMATION TO THE NRC IF REQUESTED.

E. SITE SPECIFIC BMP REQUIREMENTS

FOLLOW THE REQUIREMENTS BELOW:

1. PROTECT ALL DRAINAGE INLETS RECEIVING RUNOFF FROM DISTURBED AREAS.

2. CONTAIN ON-SITE RUNOFF USING PERIMETER SEDIMENT CONTROLS
   e. SILT FENCE
   f. VEGETATED FILTER STRIPS AND BUFFERS
   g. COMPOST FILTER BERM
   h. SANDBAG BARRIER
   i. BRUSH OR ROCK FILTER

3. CONTROL OFFSITE RUNOFF FROM ENTERING CONSTRUCTION AREA
   a. RUN-ON DIVERSION
   b. EARTH DIKE
   c. TEMPORARY DRAINS AND SWALES

WATER POLLUTION AND EROSION CONTROL NOTES: (CONT)

4. INCORPORATE APPLICABLE SITE MANAGEMENT BMP
   f. EMPLOYEE TRAINING
   g. MATERIAL DELIVERY AND STORAGE
   h. MATERIAL USE
   i. PROTECTION OF STOCKPILES
   j. SOLID WASTE MANAGEMENT
   k. SANITARY/SEPTIC WASTE MANAGEMENT
   l. HAZARDOUS WASTE MANAGEMENT
   m. SPILL PREVENTION AND CONTROL
   n. VEHICLE AND EQUIPMENT CLEANING
   o. VEHICLE AND EQUIPMENT MAINTENANCE
   p. VEHICLE AND EQUIPMENT REFUELING
   q. SCHEDULING
   r. LOCATION OF POTENTIAL SOURCES OF SEDIMENT
   s. PRESERVATION OF EXISTING VEGETATION
   t. DUST CONTROL

5. CONTAIN POLLUTANTS WITHIN THE CONSTRUCTION STAGING/STORAGE AREA BMP WITH APPLICABLE PERIMETER SEDIMENT CONTROLS AND SITE MANAGEMENT BMP. INCLUDE A STABILIZED CONSTRUCTION ENTRANCE/EXIT FOR ALL AREAS WHICH EXIT ONTO PAVED STREET. RESTRICT VEHICLE ACCESS TO THESE POINTS.

6. MANAGE CONCRETE WASTE INCLUDING INSTALLING CONCRETE WASHOUT AREA AND PROPERLY DISPOSING OF CONCRETE CURING WATER

7. REMOVE SAW CUT SLURRY AND HYDRODEMOLITION WATER FROM THE SITE BY VACUUMING. PROVIDE STORM DRAIN PROTECTION AND/ OR PERIMETER SEDIMENT CONTROLS DURING SAW CUTTING AND HYDRODEMOLITION WORK.

EROSION PREVENTION / SEDIMENT CONTROL NOTES:

1. MEASURES TO CONTROL EROSION AND OTHER POLLUTANTS SHALL BE IN PLACE BEFORE ANY CONSTRUCTION IS INITIATED.

2. REGULARLY INSPECT AND MAINTAIN ALL EROSION AND SEDIMENT CONTROLS TO ENSURE CONTINUED PERFORMANCE.

3. PERMANENT STABILIZATION

   ALL DISTURBED AREAS SHALL BE PERMANENTLY STABILIZED USING VEGETATIVE COVERING, PAVEMENT, OR EQUIVALENT, PRIOR TO REMOVING EROSION AND SEDIMENT MEASURES. TRAPPED SEDIMENT AND AREAS OF DISTURBED SOIL WHICH RESULT FROM THE REMOVAL OF THE TEMPORARY MEASURES SHALL BE IMMEDIATELY AND PERMANENTLY STABILIZED.

4. PERIMETER CONTROLS

   PERIMETER CONTROLS ARE REQUIRED DOWNSLOPE OF EQUIPMENT/ VEHICLE STAGING AREAS AT THE END OF EACH BUSINESS DAY AND AROUND MATERIALS STOCKPILES THAT ARE NOT ACTIVELY BEING USED. STOCKPILES ARE NOT ALLOWED IN THE ROAD RIGHT-OF-WAY.

5. INLET PROTECTION

   - ALL STORM DRAIN INLETS ONSITE AND THOSE OFFSITE WHICH MAY RECEIVE RUNOFF FROM THE SITE SHALL USE AN INLET PROTECTION DEVICE UNLESS THEY ARE DIRECTED TO A SEDIMENT BASIN.
   - SEDIMENT LEVELS MAY NOT EXCEED ONE THIRD OF THE HEIGHT OF A SEDIMENT BARRIER OR INLET PROTECTION DEVICE AT ANY POINT ALONG THE LENGTH OF THE SEDIMENT BARRIER OR THE INLET PROTECTION DEVICE.
   - SEDIMENT BARRIERS AND INLET PROTECTION DEVICES MUST BE UNCLOGGED AND CLEANED WHEN PERFORMANCE IS COMPROMISED.
   - TORN, WEATHERED OR SAGGING SEDIMENT BARRIERS OR INLET PROTECTION DEVICES MUST BE REPAIRED OR REPLACED IMMEDIATELY.

7. TRACK CONTROL

   - MINIMIZE SEDIMENT TRACK-OUT ONTO OFF-SITE STREETS, OTHER PAVED AREAS, AND SIDEWALKS FROM VEHICLES EXITING THE CONSTRUCTION SITE BY RESTRICTING VEHICLE TRAFFIC TO PROPERLY DESIGNATED AREAS AND USING ADDITIONAL CONTROLS TO REMOVE SEDIMENT FROM VEHICLE TIRES PRIOR TO EXITING SITE.
   - VEHICULAR PARKING AND MOVEMENTS ON PROJECT SITES MUST BE CONFINED TO PAVED SURFACES OR PREDEFINED PARKING AREAS AND VEHICLES PATHS, WHICH SHALL BE MARKED WITH FLAGS OR BOUNDARY FENCING.
   - ALL POLLUTANTS AND MATERIALS THAT ARE DROPPED, WASHED, TRACKED, SPILLED, OR OTHERWISE DISCHARGED FROM A PROJECT SITE TO OFF-SITE STREETS, OTHER PAVED AREAS, SIDEWALKS OR THE STORM SEWER SYSTEM MUST BE CLEANED USING DRY METHODS SUCH AS SWEEPING OR VACUUMING.
   - WASHING POLLUTANTS AND MATERIALS THAT ARE DISCHARGED FROM THE PROJECT SITE TO THE MS4 INTO DRAIN INLETS OR CATCH BASINS IS PROHIBITED UNLESS THE MATERIALS IS SEDIMENT AND THE INLETS ARE DIRECTED TO A SEDIMENT BASIN OR SEDIMENT TRAP.

8. BEST MANAGEMENT PRACTICES (BMPS) SHALL NOT BE REMOVED UNTIL FINAL STABILIZATION IS COMPLETE FOR EACH PHASE.

9. THE FOLLOWING BMPS WERE DETERMINED TO BE NOT APPLICABLE BASED ON THE SPECIFIC SITE CONDITIONS. AS CONSTRUCTION PROCESSES, REVISIONS MAY BE NECESSARY AND WILL BE PROVIDED TO INSPECTORS.

   - NONE

10. PRACTICE GOOD HOUSEKEEPING MEASURES THROUGHOUT THE DURATION OF CONSTRUCTION.

11. INSPECTIONS WILL BE PERFORMED WEEKLY.

PROJECT SEQUENCE:

- INSTALL INLET PROTECTION AND PERIMETER CONTROLS AROUND STAGING AREAS AND MATERIALS STOCKPILES AS NEEDED.
- PROCEED WITH CONSTRUCTION WITH LEAST POSSIBLE DISTURBANCES OF VEGETATIVE AREAS AND TEMPORARY STRUCTURES.
- INSTALL PERIMETER CONTROLS AROUND ACTIVE WORK AREAS AT THE END OF EACH BUSINESS DAY OF NOT STABILIZED.
- PLANT PERMANENT GROUND COVER ACCORDING TO THE LANDSCAPING PLAN AS SOON AS POSSIBLE.
- REMOVE OR DISMANTLE TEMPORARY EROSION CONTROL STRUCTURES AFTER PERMANENT STABILIZATION.

RAIN RESPONSE PLAN:

THE FOLLOWING WILL BE PERFORMED WHEN RAIN IS IMMINENT OR IS FORECASTED IN THE NEXT 48 HOURS:

- TEMPORARY SUSPENSION OF ACTIVE TRENCHING.
- INSPECT ALL PERIMETER CONTROLS AND INLET PROTECTION DEVICES, AND MAINTAIN AS NEEDED. REINSTALL ANY PERIMETER CONTROLS THAT WERE REMOVED DUE TO ACTIVE WORK IN THE AREA. IF A SEVERE STORM IS EXPECTED, REMOVE INLET PROTECTION DEVICES TO PREVENT FLOODING ON SURROUNDING STREETS.
- COVER OR RELOCATE MATERIAL STOCKPILES AND LIQUID MATERIAL CONTAINERS TO AVOID CONTACT WITH RAINWATER.
- PLACE SPILL PANS OR OIL-ONLY SPILL PADS UNDER CONSTRUCTION VEHICLES TO PREVENT RUNOFF FROM CONTACTING ANY SPILLED PETROLEUM PRODUCTS. PROPERLY DISPOSE OF ANY ACCUMULATED OILY WATER AFTER THE RAIN EVENT.
- RE-INSPECT AFTER THE RAIN EVENT AND REPLACE OR MAINTAIN BMPS AS NEEDED.

GOOD HOUSEKEEPING BMP's:

1. STREET SWEEPING AND VACUUMING

   ALL POLLUTANTS DISCHARGED FROM CONSTRUCTION SITE TO OFF-SITE AREAS MUST BE SWEPT OR VACUUMED EACH DAY BEFORE LEAVING THE JOB SITE.

2. MATERIALS DELIVERY, STORAGE AND USE MANAGEMENT

   PREVENT, REDUCE, OR ELIMINATE THE DISCHARGE OF POLLUTANTS FROM MATERIAL DELIVERY, STORAGE, AND USE TO THE STORM WATER SYSTEM OR WATERCOURSES BY MINIMIZING THE STORAGE OF HAZARDOUS MATERIALS ONSITE, STORING MATERIALS IN DESIGNATED AREA, INSTALLING SECONDARY CONTAINMENT. CONSTRUCTION MATERIALS, WASTE, TOXIC AND HAZARDOUS SUBSTANCES, STOCKPILES AND OTHER SOURCES OF POLLUTION SHALL NOT BE STORED IN BUFFER AREAS, NEAR AREAS OF CONCENTRATED FLOW, OR AREAS ABUTTING THE MS4, RECEIVING WATERS, OR DRAINAGE IMPROVEMENTS THAT DISCHARGE OFF-SITE. PRIMARY AND SECONDARY CONTAINMENT CONTROLS AND COVERS SHALL BE IMPLEMENTED TO THE MEP.

3. SPILL PREVENTION AND CONTROL

   CREATE AND IMPLEMENT SPILL PREVENTION AND RESPONSE PLANS TO ELIMINATE AND MINIMIZE THE DISCHARGE OF POLLUTANTS TO THE STORM SEWER SYSTEM AND RECEIVING WATERS FROM LEAKS AND SPILLS BY REDUCING THE CHANCE FOR SPILLS, ABSORBING, CONTAINING , AND CLEANING UP SPILLS AND PROPERLY DISPOSING OF SPILL MATERIALS. AT MINIMUM, ALL PROJECTS SHALL CLEANUP ALL LEAKS AND SPILLS IMMEDIATELY.

4. HAZARDOUS MATERIALS

   PREVENT OR REDUCE THE DISCHARGE OF POLLUTANTS TO STORM WATER FROM HAZARDOUS WASTE THROUGH PROPER MATERIAL USE AND WASTE DISPOSAL. IN THE EVENT THAT HAZARDOUS MATERIALS ARE DISCHARGED INTO THE STORM SEWER SYSTEM, THE CONTRACTOR SHALL IMMEDIATELY NOTIFY ASPA, AS-DOH AND DPW OF THE DISCHARGE BY TELEPHONE. A WRITTEN REPORT DESCRIBING THE POLLUTANTS THAT WERE DISCHARGED, THE REASON FOR THE DISCHARGE, AND THE MEASURES THAT HAVE BEEN TAKEN OR WILL BE TAKEN TO PREVENT A REOCCURRENCE OF THE DISCHARGE SHALL BE SUBMITTED TO THE DIRECTOR NO LESS THAN 3 DAYS AFTER NOTIFICATION BY PHONE.

5. NON-HAZARDOUS MATERIALS

   IN THE EVENT THAT NON-HAZARDOUS MATERIALS ARE DISCHARGED TO THE STORM SEWER SYSTEM, THE CONTRACTOR SHALL NOTIFY THE ASPA AND DPW FACILITIES MAINTENANCE BY TELEPHONE NO LATER THAN THE NEXT BUSINESS DAY. A WRITTEN REPORT DESCRIBING THE POLLUTANTS THAT WERE DISCHARGED, THE REASON FOR THE DISCHARGE, AND THE MEASURES THAT HAVE BEEN TAKEN OR WILL BE TAKEN TO PREVENT A REOCCURRENCE OF THE DISCHARGE SHALL BE SUBMITTED TO THE DIRECTOR NO LESS THAN 3 DAYS AFTER NOTIFICATION BY PHONE.

6. VEHICLE AND EQUIPMENT CLEANING

   ELIMINATE AND MINIMIZE THE DISCHARGE OF POLLUTANTS TO STORM WATER FROM VEHICLE AND EQUIPMENT CLEANING OPERATIONS BY USING OFF-SITE FACILITIES WHEN FEASIBLE, WASHING IN DESIGNATED, CONTAINED AREAS ONLY, AND ELIMINATING DISCHARGES TO THE STORM DRAIN SYSTEM BY EVAPORATING AND/OR TREATING WASH WATER, AS APPROPRIATE OR INFILTRATING WASH WATER FOR EXTERIOR CLEANING ACTIVITIES THAT USE WATER ONLY.

7. VEHICLE AND EQUIPMENT FUELING

   PREVENT FUEL SPILLS AND LEAKS BY USING OFF-SITE FACILITIES, FUELING ONLY IN DESIGNATED AREAS, ENCLOSING OR COVERING STORED FUEL, AND IMPLEMENTING SPILL CONTROLS SUCH AS SECONDARY CONTAINMENT AND ACTIVE MEASURES USING SPILL RESPONSE KITS.

8. VEHICLE AND EQUIPMENT MAINTENANCE

   ELIMINATE AND MINIM

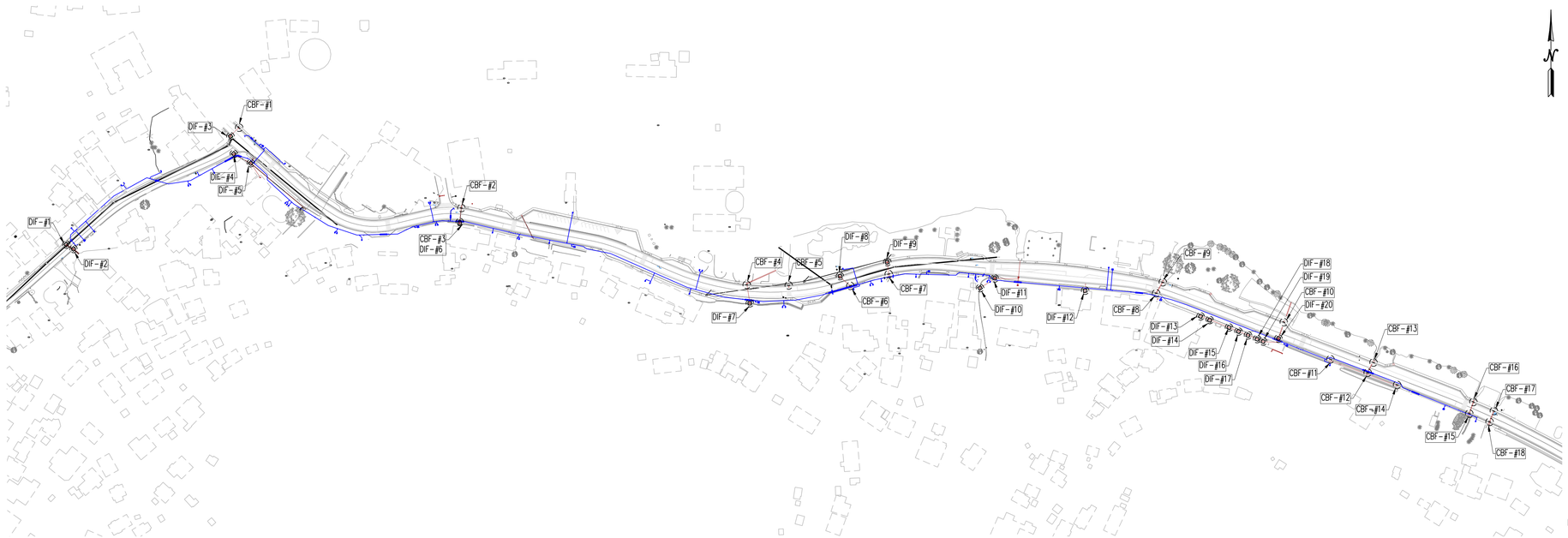

1 C019 EROSION CONTROL PLAN
SCALE: 1"=80'

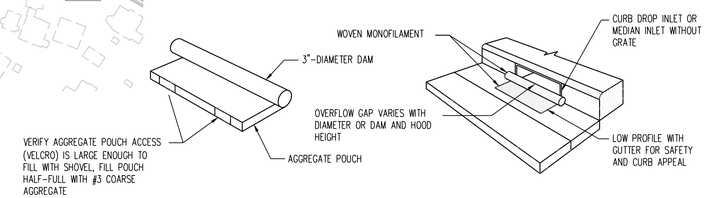

4 C019 SEDIMENT FILTER FOR CATH BASIN
NOT TO SCALE

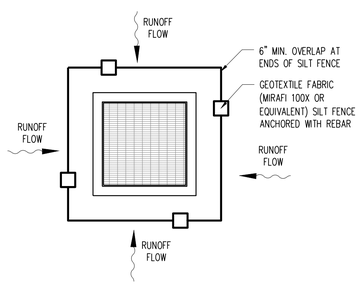

PLAN

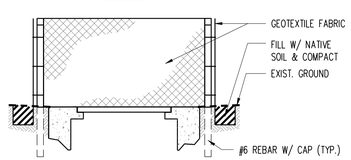

SECTION

A. DRAIN INLET AT SHOULDER AREA
NOT TO SCALE

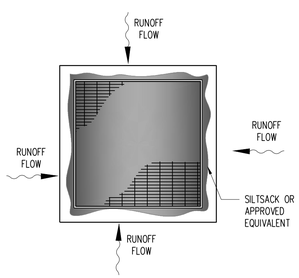

PLAN

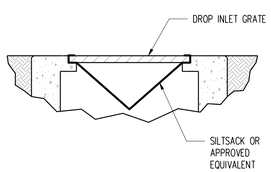

SECTION

A. DRAIN INLET AT ROADWAY/SIDEWALK AREA
NOT TO SCALE

1 C019 TEMPORARY STORM DRAIN PROTECTION DETAIL AT DRAIN INLETS
NOT TO SCALE

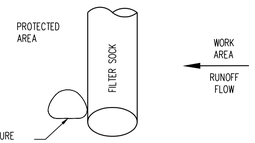

PLAN

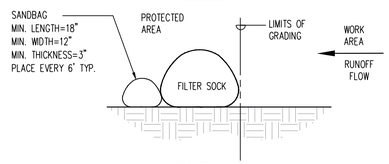

SECTION

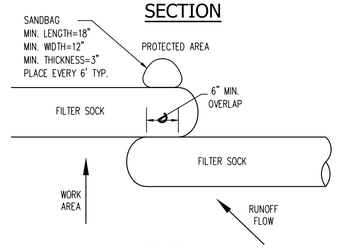

OVERLAP

2 C019 FILTER SOCK
NOT TO SCALE

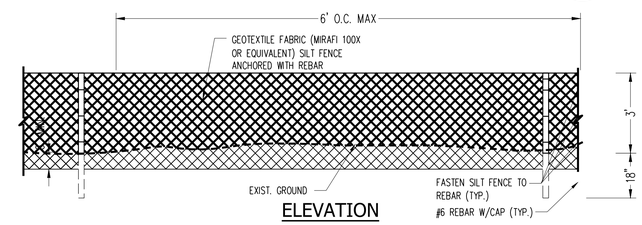

ELEVATION

TEMPORARY SILT FENCE NOTES

1. FILTER FABRIC SHALL BE OF THE TYPE SPECIFIED AND INSTALLED IN COMBINATION WITH A SUPPORT NET OF POLYESTER NETTING OR APPROVED EQUAL. THE FILTER FABRIC SHALL BE MINIMUM OF 36 INCHES WIDE AND THE SUPPORT NET A MINIMUM OF 30 INCHES.
2. IF TEMPORARY SILT FENCE IS OBTAINED FROM MANUFACTURER AS A PACKAGE (I.E. FABRIC ATTACHED TO POST) THE MANUFACTURERS INSTALLATION INSTRUCTIONS SHALL BE ADHERED TO.
3. POSTS SHALL BE METAL WHERE POSSIBLE, CROSS SECTION OF POST WILL BE SUBSTANTIAL ENOUGH TO SUPPORT A LOADED TEMPORARY SILT FENCE WITHOUT BENDING. POST SPACING SHALL BE 4 FEET TO 8 FEET, DEPENDING ON POST SIZE.
4. SOME MANUFACTURERS ONLY SUPPLY TEMPORARY SILT FENCE WITH WOODEN POST. DURING INSTALLATION , MEASURES SHOULD BE TAKEN TO PREVENT DAMAGE TO POST.
5. REMOVE TEMPORARY SILT FENCE AFTER CONSTRUCTION. TEMPORARY SILT FENCE WILL NOT BE MEASURED AND PAID FOR SEPARATELY, BUT SHALL BE CONSIDERED INCIDENTAL TO THE VARIOUS CONTRACT ITEMS.

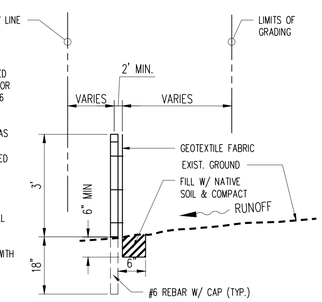

SECTION

3 C019 SILT FENCE
NOT TO SCALE

LEGEND:

CBF-##	CBF CATCH BASIN FILTER
DIF-##	DIF DRAIN INLET FILTER

GRAPHICAL SCALE:
80' 0 80' 160' 240'
SCALE: 1"=80'

THIS DOCUMENT IS RELEASED FOR THE PURPOSE OF REVIEW UNDER THE AUTHORITY OF ROBERT A. MADDOX IV STATE OF HAWAII 5889-C IT IS NOT TO BE USED FOR CONSTRUCTION
EXP DATE: 04/30/24

REVISION	BY	CHECKED BY	APR.	DATE

PREPARED BY:
CHECKED BY:
APPROVED BY:
ISSUE FOR:

AMERICAN SAMOA POWER AUTHORITY

ASPA WATER ENGINEERING DIVISION
TAFUNA, AMERICAN SAMOA
P.O.BOX PPB, PAGO PAGO AM SAMOA 96799.
TEL(684) 699-1333, FAX (684) 699-4035

PROJECT: ASBESTOS CEMENT PIPE REPLACEMENT AND WATER SYSTEM UPGRADE PROJECT - PAGO SITE
DRAWING TITLE: EROSION CONTROL PLAN AND DETAILS
PROJECT LOCATION: PAGO PAGO, TUTUILA ISLAND AMERICAN SAMOA

SCALE: AS SHOWN
PROJECT NO: --
DATE: MAY 2023
SHEET NO. C019

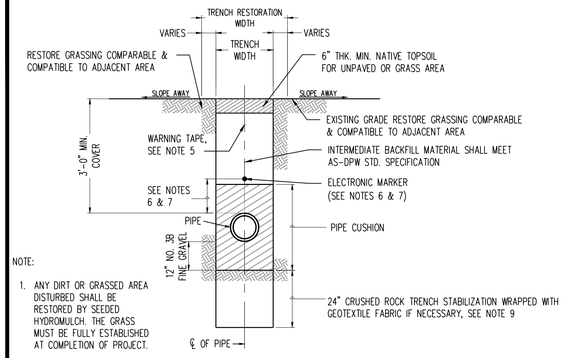

NOTE:

1. ANY DIRT OR GRASSED AREA DISTURBED SHALL BE RESTORED BY SEEDED HYDROMULCH. THE GRASS MUST BE FULLY ESTABLISHED AT COMPLETION OF PROJECT.
2. SEE EROSION CONTROL & BMP NOTES, SEE SHEET C018.

1 / C020 TYPICAL TRENCH RESTORATION DETAIL WITHIN GRASSED AREA OR UNPAVED AREA

NOT TO SCALE

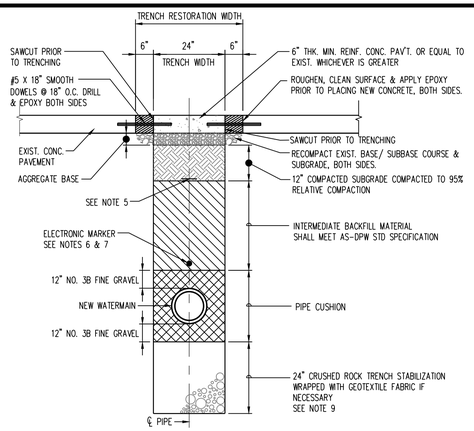

2 / C020 TYPICAL TRENCH RESTORATION DETAIL FOR CONCRETE PAVEMENT

NOT TO SCALE

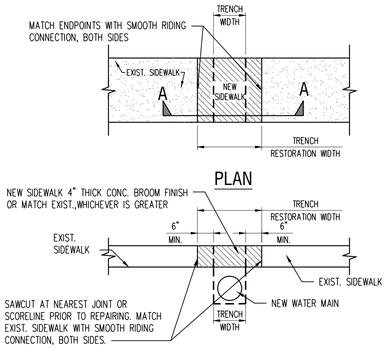

3 / C020 EXIST. CONCRETE SIDEWALK RESTORATION DETAIL-1 (PERPENDICULAR CUT)

NOT TO SCALE

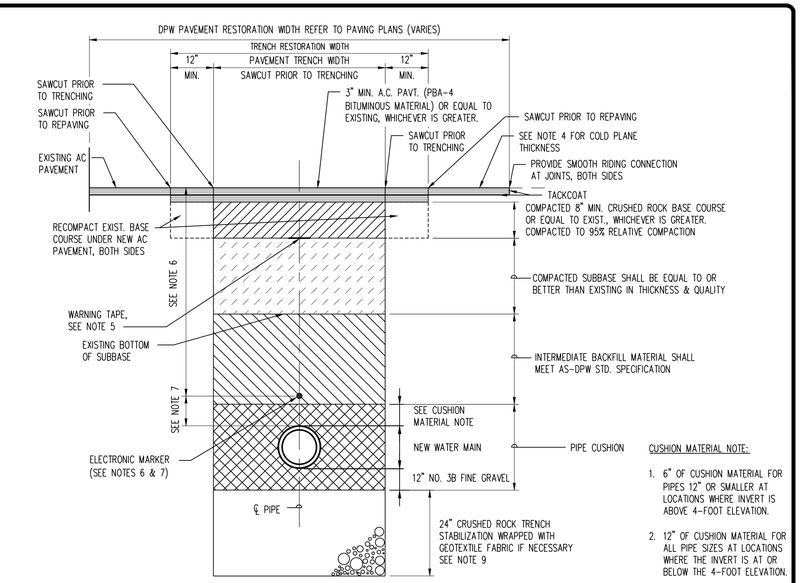

CUSHION MATERIAL NOTE:

1. 6" OF CUSHION MATERIAL FOR PIPES 12" OR SMALLER AT LOCATIONS WHERE INVERT IS ABOVE 4-FOOT ELEVATION.
2. 12" OF CUSHION MATERIAL FOR ALL PIPE SIZES AT LOCATIONS WHERE THE INVERT IS AT OR BELOW THE 4-FOOT ELEVATION.

4 / C020 TYPICAL TRENCH RESTORATION DETAIL FOR ASPHALT PAVED STREETS (PAVED ROADWAY 36 FEET OR LESS)

NOT TO SCALE

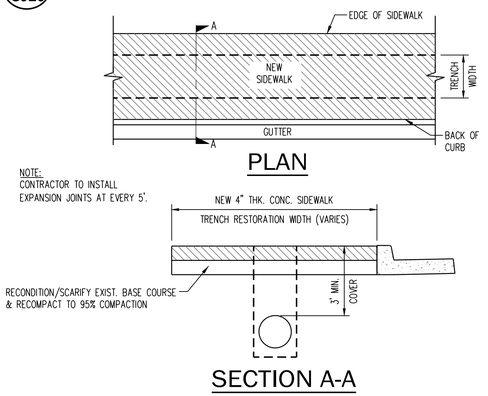

5 / C020 EXIST. CONCRETE SIDEWALK RESTORATION DETAIL-2 (LONGITUDINAL CUT)

NOT TO SCALE

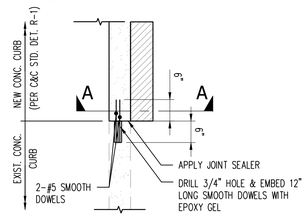

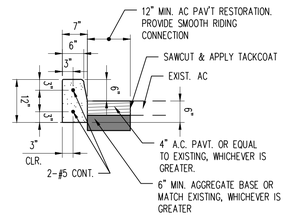

7 / C020 CURB RESTORATION DETAIL

NOT TO SCALE

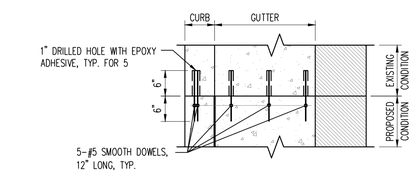

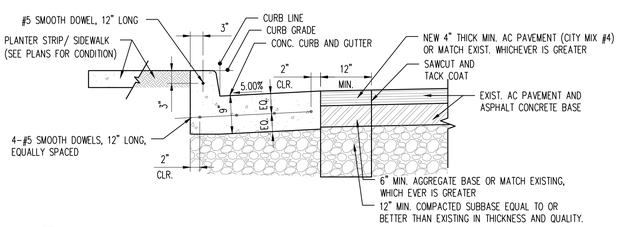

6 / C020 RESTORATION OF CURB & GUTTER DETAIL

NOT TO SCALE

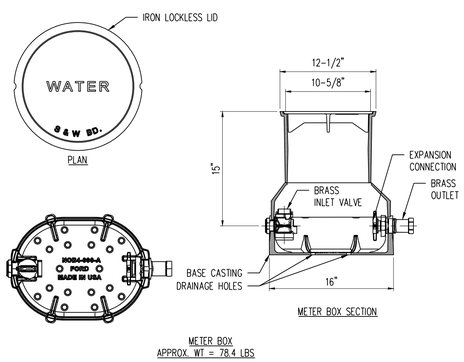

8 / C020 STRAIGHT BRASS INLET VALVE BY STRAIGHT FEMALE IRON PIPE OUTLET

NOT TO SCALE

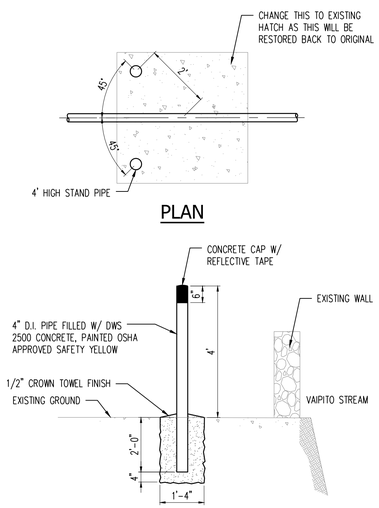

9 / C020 GUARD POST

NOT TO SCALE

NOTES:

1. PAVEMENT STRUCTURE SHALL BE EQUAL TO OR BETTER THAN EXISTING IN THICKNESS AND QUALITY.
2. ALL DISTURBED PAVEMENT MARKINGS SHALL BE REPLACED AND ALL REQUIRED UTILITY ADJUSTMENTS SUCH AS MANHOLE COVERS ETC. SHALL BE DONE BY THE CONTRACTOR.
3. CONTRACTOR SHALL COORDINATE WORK WITH BWS.
4. FOR PAVEMENT RESTORATION WIDTH, COLD PLANE MIN. 1-1/2 INCHES OF A.C. THEN REPAVE RESTORATION WIDTH WITH 1-1/2 INCHES OF A.C. MIX #4.
5. INSTALL 4 MIL THICK, NON-METALLIC, BLUE COLORED, 6" WIDE WARNING TAPE OVER CENTERLINE OF THE PIPE AND BELOW THE BASE COURSE ALONG THE ENTIRE LENGTH OF TRENCH. TAPE SHOULD BE MARKED WITH "CAUTION WATER LINE BURIED BELOW." PAYMENT FOR THE FURNISHING AND INSTALLATION OF THE WARNING TAPE SHALL BE INCIDENTAL TO THE UNIT PRICE BID FOR THE PIPE.
6. INSTALL ELECTRONIC MARKER OVER CENTERLINE OF ALL PIPES AT A MINIMUM DEPTH OF 2 FEET AND A MAXIMUM DEPTH OF 3 FEET FROM FINISH GRADE.
7. INSTALL ELECTRONIC MARKER AT A MINIMUM CLEARANCE OF 6 INCHES, WHERE POSSIBLE. INSTALL MARKERS ON OR ABOVE CONCRETE JACKETS.
8. LONGITUDINAL LIMITS OF PAVING IN A LANE SHALL BE A MINIMUM WIDTH OF ONE LANE NOT EXCEEDING 15 FEET IN WIDTH WITH A MINIMUM OF TWO FEET IN ADDED LENGTH TO EACH OF THE LONGITUDINAL TRENCH.
9. IF SOFT/LOOSE SUBSOIL CONDITIONS ARE ENCOUNTERED AT THE INVERT ELEVATIONS OF THE PIPE, PROVIDE 24" SUBGRADE STABILIZATION LAYER (NO. 2 ROCK ASTM C 33, NO. 4 GRADATION) WRAPPED IN A NON-WOVEN FILTER FABRIC (MIRAFI 180N OR EQUIVALENT) BELOW THE BEDDING LAYER.

* FOR LATERAL TRENCHES, MINIMUM REPAVEMENT RESTORATION WIDTH SHALL NOT BE LESS THAN 4 FEET WIDE.

TRENCH WIDTH	
PIPE DIAMETER (INCHES)	TRENCH WIDTH (INCHES)
TUBING <4	12
4	24
6	24
8	24
12	24

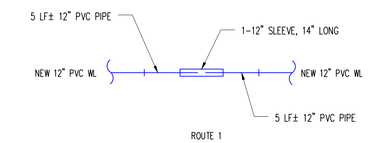

10 / C020 PHASING CONNECTION SCHEMATIC LAYOUT (PHASE 1 / PHASE 2) STA. 1+20 WL-B ALONG ROUTE 1

NOT TO SCALE

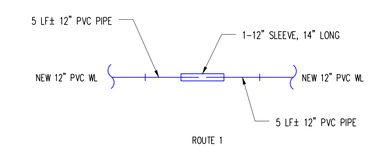

11 / C020 PHASING CONNECTION SCHEMATIC LAYOUT (PHASE 2 / PHASE 3) STA. 16+00 WL-B ALONG ROUTE 1

NOT TO SCALE

THIS DOCUMENT IS RELEASED FOR THE PURPOSE OF REVIEW UNDER THE AUTHORITY OF GARY COOVER STATE OF HAWAII 5689-C IT IS NOT TO BE USED FOR CONSTRUCTION
EXP DATE: 04/30/24

REVISION	BY	CHECKED BY	APR.	DATE

PREPARED BY:
CHECKED BY:
APPROVED BY:
ISSUE FOR:

AMERICAN SAMOA POWER AUTHORITY
ASPA WATER ENGINEERING DIVISION
TAFUNA, AMERICAN SAMOA
P.O.BOX PPB, PAGO PAGO AM SAMOA 96799.
TEL(684) 699-1333, FAX (684) 699-4035

PROJECT: ASBESTOS CEMENT PIPE REPLACEMENT AND WATER SYSTEM UPGRADE PROJECT - PAGO SITE

DRAWING TITLE: MISCELLANEOUS DETAILS - 1

PROJECT LOCATION: PAGO PAGO, TUTUILA ISLAND AMERICAN SAMOA

SCALE: AS SHOWN

PROJECT NO.: --

DATE: MAY 2023

SHEET NO.: C020

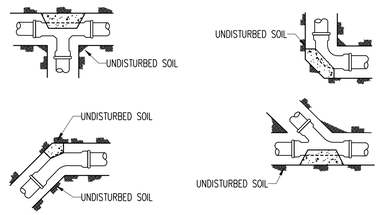

NOTE:
REFER TO TABLE BELOW FOR THE SIZE OF REACTION BLOCKS. REACTION BLOCKS SHALL BEAR AGAINST UNDISTURBED SOIL. CONCRETE SHALL BE CLASS 2500 PSI.

TYPE OF SOIL CONDITION	LATERAL BEARING PRESSURE
A. SOFT CLAY;FINE LOOSE SAND	500LBS. PER SQ. FT.
B. SAND & CLAY; MIXED OR LAYERS; FINED CONFINED SAND	1000LBS. PER SQ. FT.
C. HARD DRY CLAY	1500LBS. PER SQ. FT.
D. COARSE SAND	2000LBS. PER SQ. FT.
E. GRAVEL	3000LBS. PER SQ. FT.
F. SOFT ROCK	4000LBS. PER SQ. FT.
G. HARDPAN	5000LBS. PER SQ. FT.

NOTE:
ACTUAL FIELD CONDITIONS AND SOIL TYPE SHALL BE VERIFIED IN THE FIELD. THE SCHEDULE, DIMENSIONS AND DETAILS AS SHOWN ARE PROVIDED AS A GUIDE ONLY. THE CONTRACTOR OR ENGINEER WHO PREPARED THE PLANS SHALL SUBMIT THE FINAL DESIGN AND DETAILS TO THE ASPA PROJECT ENGINEER FOR REVIEW AND APPROVAL AFTER FIELD VERIFICATION AND PRIOR TO INSTALLATION.

MINIMUM BEARING AREAS (SQ. FT.) FOR HORIZONTAL THRUST BLOCKS

PIPE SIZE	BEND	PRESSURE 150PSI						
		TYPE OF SOIL CONDITION						
		A	B	C	D	E	F	G
4"	DIS CAPS	6.5	3.5	2.0	1.5	1.0	1.0	1.0
	1/4	9.0	4.5	3.0	2.5	1.5	1.0	1.0
	1/8	5.0	2.5	1.5	1.5	1.0	1.0	1.0
	1/16	2.5	1.5	1.0	1.0	1.0	1.0	1.0
	1/32	1.5	1.0	1.0	1.0	1.0	1.0	1.0
6"	DIS CAPS	14.0	7.0	5.0	3.5	2.5	2.0	1.5
	1/4	20.0	10.0	7.0	5.0	3.5	2.5	2.0
	1/8	11.0	5.5	3.5	3.0	2.0	1.5	1.0
	1/16	5.5	3.0	2.0	1.5	1.0	1.0	1.0
	1/32	3.0	1.5	1.0	1.0	1.0	1.0	1.0
8"	DIS CAPS	25.0	12.5	8.5	6.5	4.0	3.0	2.5
	1/4	35.0	18.0	12.0	9.0	6.0	4.5	3.5
	1/8	20.0	9.5	6.5	5.0	3.0	2.5	2.0
	1/16	10.0	5.0	3.5	2.5	1.5	1.0	1.0
	1/32	5.0	2.5	1.5	1.5	1.0	1.0	1.0
12"	DIS CAPS	34.0	17.0	11.5	8.5	5.5	4.5	3.5
	1/4	48.0	24.0	16.0	12.0	8.0	6.0	5.0
	1/8	26.0	13.0	8.5	6.5	4.5	3.5	2.5
	1/16	13.0	6.5	4.5	3.5	2.0	1.5	1.5
	1/32	7.0	3.5	2.5	2.0	1.0	1.0	1.0

1 C021 TYPICAL HORIZONTAL THRUST BLOCK
NOT TO SCALE

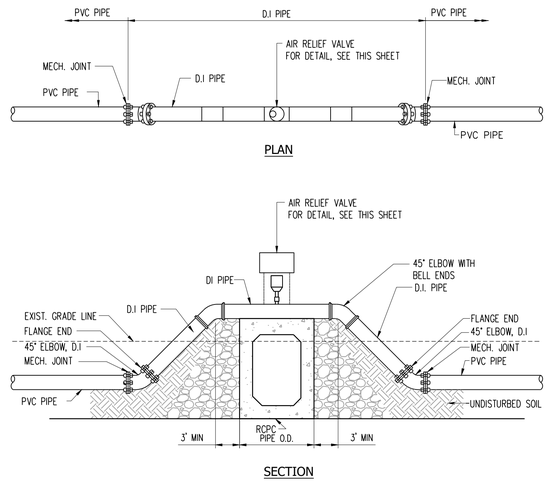

2 C021 TYPICAL PIPE CROSSING (ABOVE GRADE) AT BOX CULVERT
NOT TO SCALE

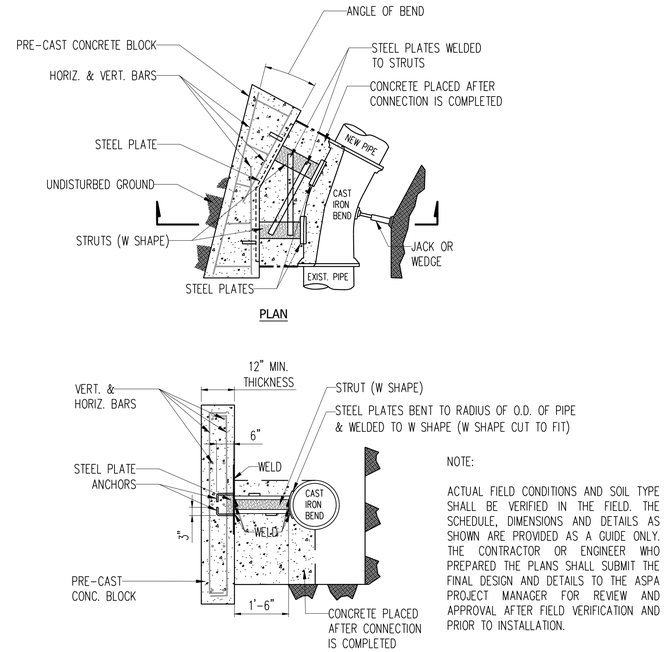

NOTE:

ACTUAL FIELD CONDITIONS AND SOIL TYPE SHALL BE VERIFIED IN THE FIELD. THE SCHEDULE, DIMENSIONS AND DETAILS AS SHOWN ARE PROVIDED AS A GUIDE ONLY. THE CONTRACTOR OR ENGINEER WHO PREPARED THE PLANS SHALL SUBMIT THE FINAL DESIGN AND DETAILS TO THE ASPA PROJECT MANAGER FOR REVIEW AND APPROVAL AFTER FIELD VERIFICATION AND PRIOR TO INSTALLATION.

3 C021 TYPICAL THRUST BLOCK W/ STRUCTURAL STRUT FOR CONNECTION
NOT TO SCALE

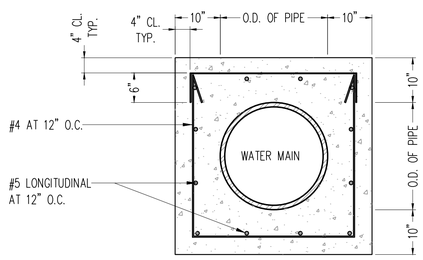

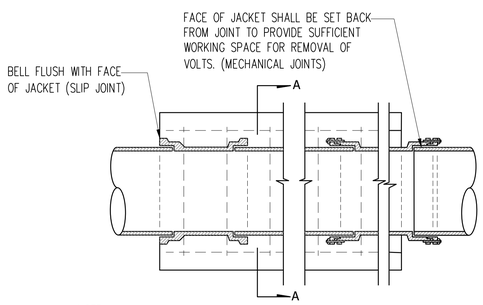

NOTE:
1. WHEREVER CONSTRUCTION JOINTS ARE REQUIRED, ASPA APPROVED 6" RUBBER OR NEOPRENE WATERSTOPS OR CONCRETE BONDING AGENT APPROVED BY ASPA SHALL BE INSTALLED.
2. NO CONCRETE JACKETING OF PVC PIPE OR EXISTING AC PIPE WILL BE ALLOWED.
3. CONCRETE SHALL BE CLASS 2500 PSI.
4. REINFORCING DESIGN APPLICABLE FOR STRAIGHT PIPE JACKETED SEGMENT. FOR SIPHON OR OFFSET, SUBMIT SHOP DRAWINGS.
5. PRECAST JACKETED WATERLINE SEGMENT SHALL BE DESIGNED AND STAMPED BY A LICENSED STRUCTURAL ENGINEER AND APPROVED BY ASPA.

4 C021 TYPICAL REINFORCED CONCRETE JACKET
NOT TO SCALE

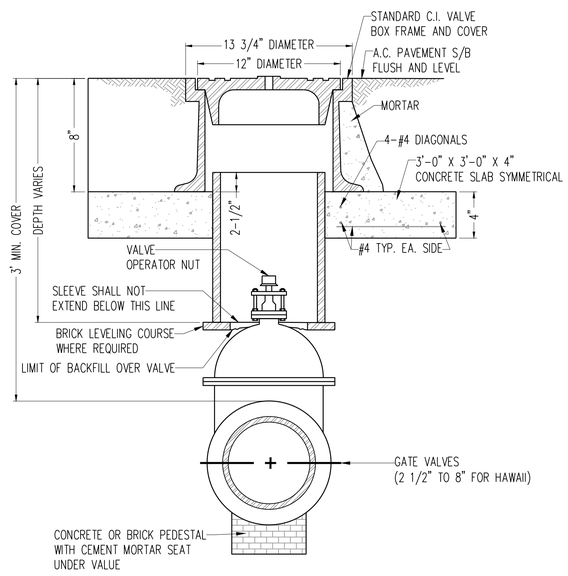

NOTE:
1. THE LIMIT OF PIPE CUSHION BACKFILL AROUND THE VALVE SHALL BE THE TRENCH WIDTH X 4 FEET ON EACH SIDE OF VALVE AND FILL TO 8" BELOW FINISH GRADE.
2. IF VALVE OPERATOR NUT IS DEEPER THAN 5', TYPE B OR C MANHOLE SHALL BE USED.
3. FOR DIRECT BURIED BEVEL GEARED GATE OR BUTTERFLY VALVES REFER TO V15 CONCRETE SHALL BE CLASS 2500 PSI.
4. INSTALL PRECAST WATERPROOFED TYPE B OR C MANHOLE FOR VALVES SUBMERGED IN WATER.
5. PAVEMENT FOR PIPE CUSHION BACKFILL SHALL BE INCIDENT TO VALVE INSTALLATION.

5 C021 VALVE BOX INSTALLATION FOR GATE VALVE
NOT TO SCALE

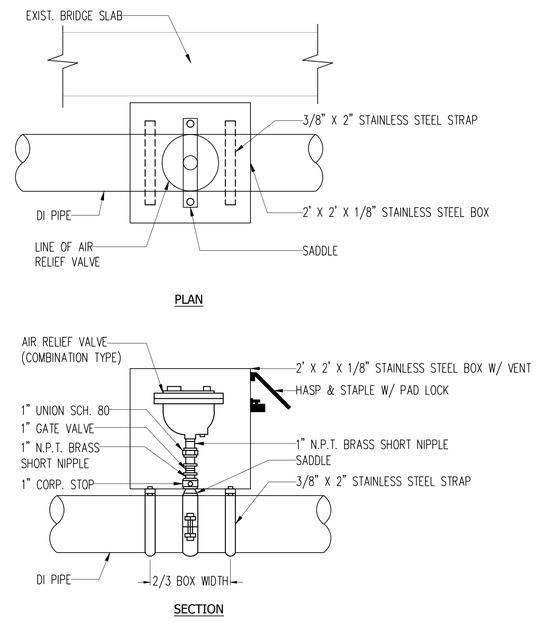

6 C021 AIR RELIEF VALVE BOX & ENCLOSURE DETAIL ON BRIDGE
NOT TO SCALE

THIS DOCUMENT IS RELEASED FOR THE PURPOSE OF REVIEW UNDER THE AUTHORITY OF GARY GOOVER STATE OF HAWAII 15689-C IT IS NOT TO BE USED FOR CONSTRUCTION.

EXP. DATE: 04/30/24

REVISION	BY	CHECKED BY	APR.	DATE

PREPARED BY:
CHECKED BY:
APPROVED BY:
ISSUE FOR:

AMERICAN SAMOA POWER AUTHORITY

ASPA WATER ENGINEERING DIVISION
TAFUNA, AMERICAN SAMOA
P.O.BOX PPB, PAGO PAGO AM SAMOA 96799.
TEL(684) 699-1333, FAX (684) 699-4035

PROJECT: ASBESTOS CEMENT PIPE REPLACEMENT AND WATER SYSTEM UPGRADE PROJECT - PAGO SITE

DRAWING TITLE: MISCELLANEOUS DETAILS - 2

PROJECT LOCATION: PAGO PAGO, TUTUILA ISLAND AMERICAN SAMOA

SCALE: AS SHOWN
PROJECT NO: --
DATE: MAY 2023
SHEET NO. C021

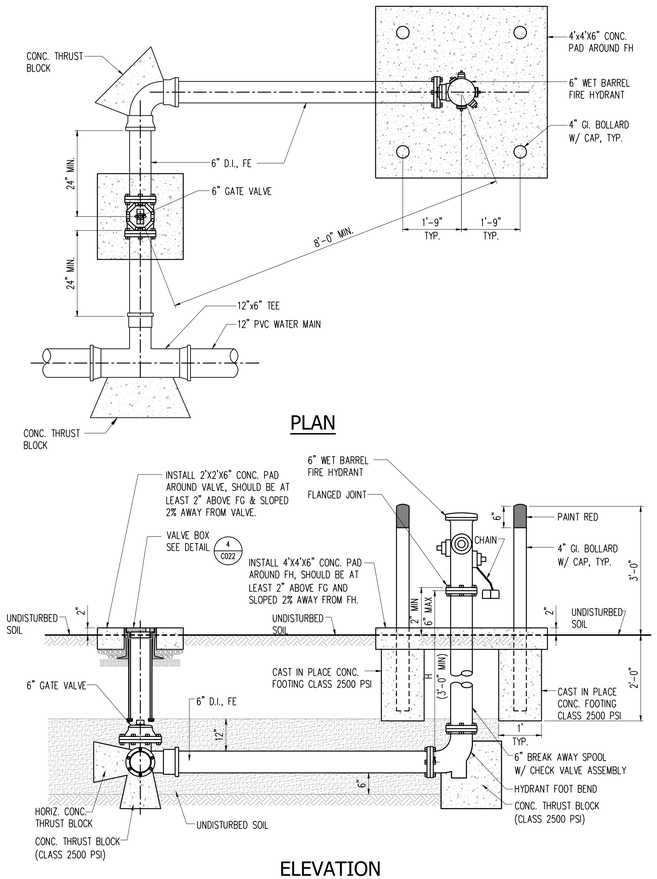

1 C022 TYPICAL FIRE HYDRANT DETAIL
NOT TO SCALE

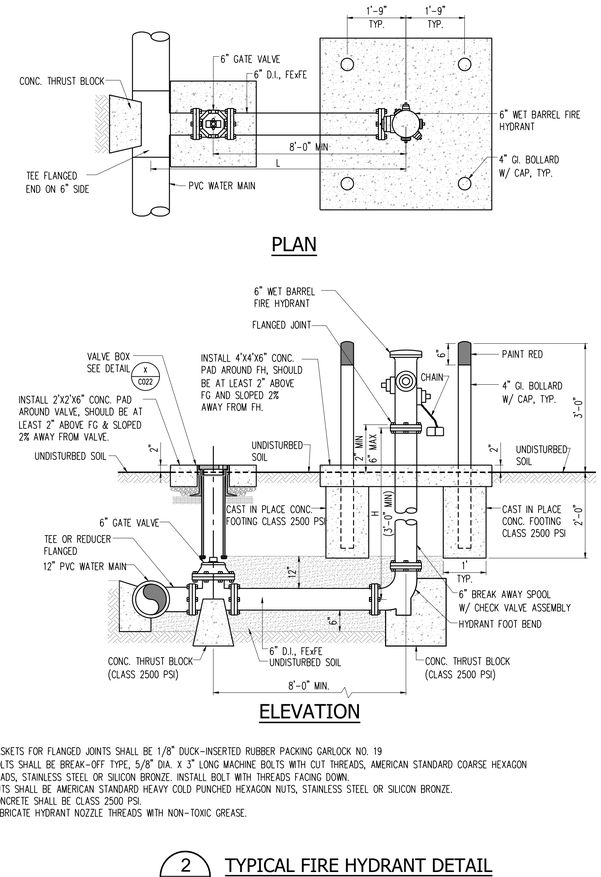

NOTES:
1. GASKETS FOR FLANGED JOINTS SHALL BE 1/8" DUCK-INSERTED RUBBER PACKING GARLOCK NO. 19
2. BOLTS SHALL BE BREAK-OFF TYPE, 5/8" DIA. X 3" LONG MACHINE BOLTS WITH CUT THREADS, AMERICAN STANDARD COARSE HEXAGON HEADS, STAINLESS STEEL OR SILICON BRONZE. INSTALL BOLT WITH THREADS FACING DOWN.
3. NUTS SHALL BE AMERICAN STANDARD HEAVY COLD PUNCHED HEXAGON NUTS, STAINLESS STEEL OR SILICON BRONZE.
4. CONCRETE SHALL BE CLASS 2500 PSI.
5. LUBRICATE HYDRANT NOZZLE THREADS WITH NON-TOXIC GREASE.

2 C022 TYPICAL FIRE HYDRANT DETAIL
NOT TO SCALE

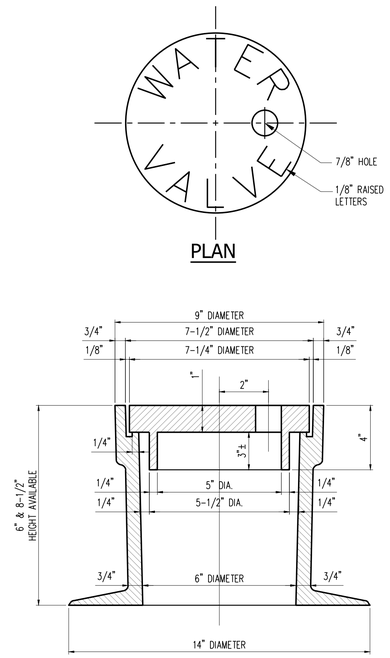

3 C022 VALVE COVER & FRAME DETAIL
SCALE: NTS

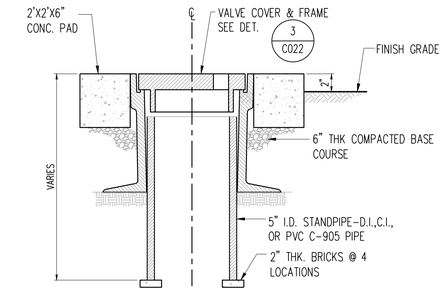

4 C022 VALVE BOX DETAIL
SCALE: NTS

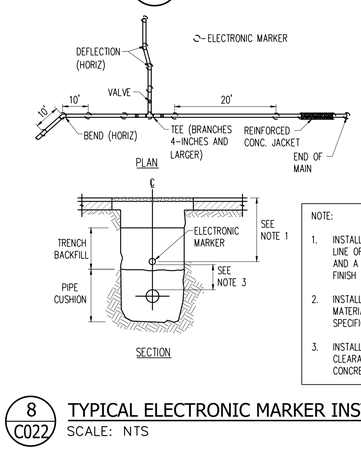

NOTE:
1. INSTALL ELECTRONIC MARKER OVER CENTER LINE OF PIPE AT A MINIMUM DEPTH OF 2 FEET AND A MAXIMUM DEPTH OF 3 FEET FROM FINISH GRADE.
2. INSTALL TRENCH BACKFILL AND PIPE CUSHION MATERIAL IN ACCORDANCE TO THE PLANS AND SPECIFICATIONS.
3. INSTALL ELECTRONIC MARKER AT A MINIMUM CLEARANCE OF 6-INCHES ABOVE THE PIPE OR CONCRETE JACKET.

8 C022 TYPICAL ELECTRONIC MARKER INSTALLATION DETAIL
SCALE: NTS

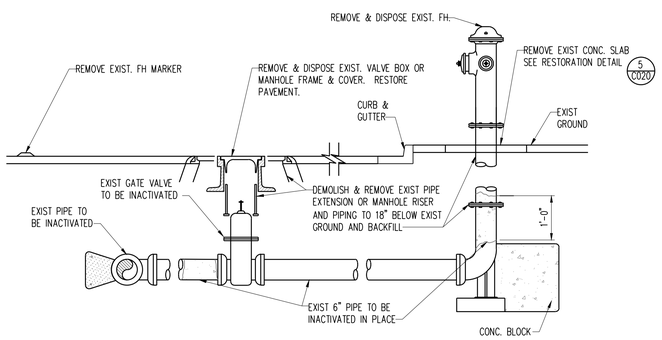

5 C022 FIRE HYDRANT DEMOLITION DETAIL
NOT TO SCALE

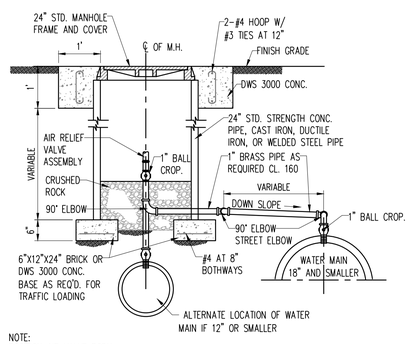

NOTE:
POSITION AIR VALVE BODY 4" FRONT OR BACK FROM INSIDE WALL OF MANHOLE

SECTION THROUGH MANHOLE

6 C022 AIR RELIEF VALVE DETAIL
SCALE: NTS

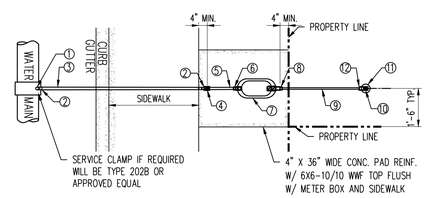

DENOTES FORD METER MANUFACTURING CO. NUMBER

NOTES:
1. ALL FITTINGS AND MATERIALS SHALL BE AS LISTED BY BRAND NAME AND APPROVED EQUAL FOR CONDITION OTHER THAN STANDARD CONDITION SHOWN, ENGINEER SHALL SUBMIT MODIFIED DETAIL FOR APPROVAL.
2. WHERE THERE IS NO SIDEWALK, THE 4" CONCRETE PAD SHALL MEASURE 42" FRONT-TO-BACK AND 36" ALONG THE PROPERTY LINE, WITH TOP ELEVATION 2" ABOVE THE GRADED SHOULDER.
3. REPLACE PLASTIC VALVE BOX WITH CAST IRON FRAME & COVER IF SUBJECT TO TRAFFIC.

TABLE "A"					
① CORP. STOP	② COPPER ADAPTER	③ COPPER SERVICE TUBING	④ BRONZE BALL VALVE	⑤ BRASS NIPPLE	⑥ BRASS FITTING
2" AWWA THREAD X FEMALE I.P.T. FB 1600-4	2" MALE I.P.T. X COPPER	2"	2" FEMALE I.P.T. B 11-444	2" X 4"	N/A

TABLE "A"						
⑦ CAST IRON METER BOX	⑧ COPPER ADAPTER	⑨ COPPER SERVICE TUBING	⑩ BRONZE BALL VALVE	⑪ PLASTIC VALVE BOX	⑫ DIELECTRIC COUPLING
1" FEMALE I.P.T. INLET 1" FEMALE I.P.T. OUTLET LYLB 111-243-TP (METER SHUTOFF AND DUAL CHECK VALVE INCLUDED)	1" MALE I.P.T. X COPPER	1"	1" FEMALE I.P.T. B 11-333 HB-34S	10" AMETEK 10-181-014 W/ GREEN COVER 10-181-015	1" BRASS W/ CLOSE NIPPLE

7 C022 SINGLE SERVICE LATERAL
NOT TO SCALE

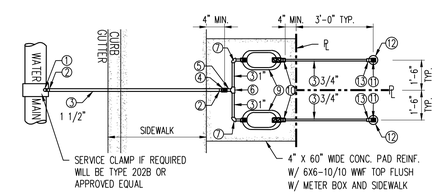

DENOTES FORD METER MANUFACTURING CO. NUMBER

TABLE "C-1"					
① BALL STOP CORP.	② COPPER ADAPTER	③ COPPER SERVICE TUBING	④ BRONZE BALL VALVE	⑤ COPPER ADAPTER	⑥ COPPER TEE
2" AWWA THREAD X FEMALE I.P.T. FB 1600-7	2" MALE I.P.T. X COPPER	SIZES AS NOTED	2" FEMALE I.P.T. B 11-666	2" MALE I.P.T. X COPPER (SPIGOT)	1" X 1" X 2" C X C X C

TABLE "C-1"						
⑦ COPPER 90° ELLS	⑧ COPPER ADAPTER	⑨ CAST IRON METER VALVE	⑩ COPPER ADAPTER	⑪ BRONZE BALL VALVE	⑫ PLASTIC VALVE BOX	⑬ DIELECTRIC COUPLING
1" C X C	1" MALE I.P.T. X COPPER (SPIGOT)	1" FEMALE I.P.T. INLET 1" FEMALE I.P.T. OUTLET LYLB 111-243-TP (METER SHUTOFF AND DUAL CHECK VALVE INCLUDED)	1" MALE I.P.T. X COPPER	1" FEMALE I.P.T. B 11-333 HB-34S	10" AMETEK 10-181-014 W/ GREEN COVER 10-181-015	1" BRASS WITH CLOSE NIPPLE

8 C022 DOUBLE SERVICE LATERAL
NOT TO SCALE

THIS DOCUMENT IS RELEASED FOR THE PURPOSE OF REVIEW UNDER THE AUTHORITY OF ASPA WATER ENGINEER STATE OF HAWAII 22589-C IT IS NOT TO BE USED FOR CONSTRUCTION

EXP DATE: 04/30/24

REVISION	BY	CHECKED BY	APR.	DATE

PREPARED BY:
CHECKED BY:
APPROVED BY:
ISSUE FOR:

ASPA
AMERICAN SAMOA POWER AUTHORITY
ASPA WATER ENGINEERING DIVISION
TAFUNA, AMERICAN SAMOA
P.O.BOX PPB, PAGO PAGO AM SAMOA 96799.
TEL.(684) 699-1333, FAX (684) 699-4035

PROJECT: ASBESTOS CEMENT PIPE REPLACEMENT AND WATER SYSTEM UPGRADE PROJECT - PAGO SITE

DRAWING TITLE: MISCELLANEOUS DETAILS - 3

PROJECT LOCATION: PAGO PAGO, TUTUILA ISLAND AMERICAN SAMOA

SCALE: AS SHOWN

PROJECT NO.: --

DATE: MAY 2023

SHEET NO.: C022

LEGEND:

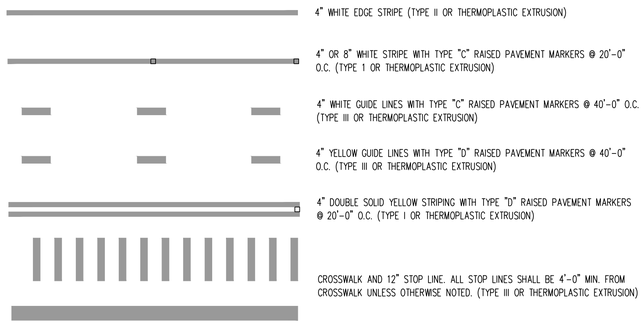

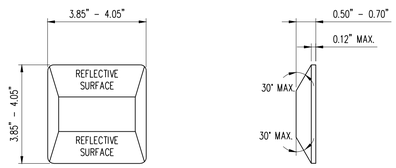

TYPE DB - TWO-WAY BLUE REFLECTIVE MARKER (FH MARKER)
NOT TO SCALE

1 C023 STRIPING LEGEND & NOTES
AS SHOWN

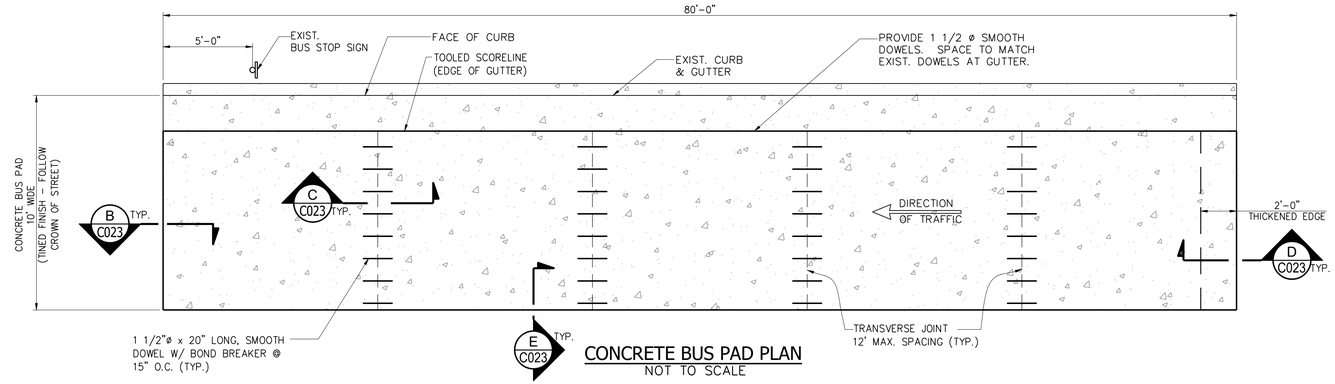

CONCRETE BUS PAD PLAN
NOT TO SCALE

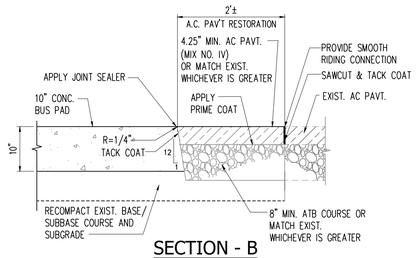

SECTION - B
NOT TO SCALE

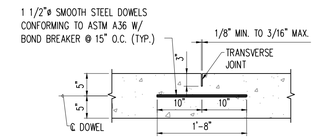

SECTION - C
NOT TO SCALE

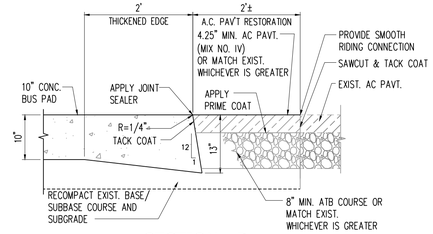

SECTION - D
NOT TO SCALE

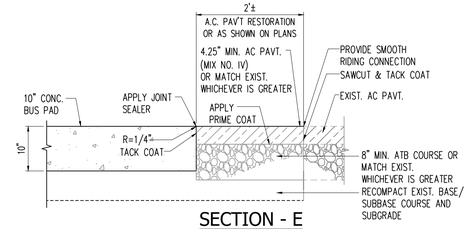

SECTION - E
NOT TO SCALE

2 C023 CONCRETE BUS PAD PLAN DETAIL
AS SHOWN

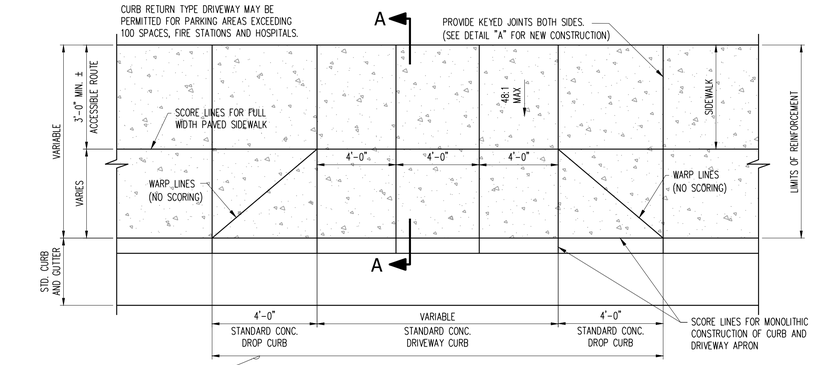

PLAN
NOT TO SCALE

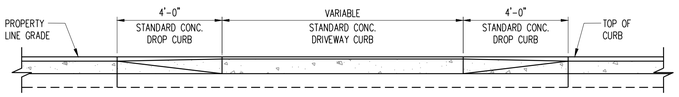

ELEVATION
NOT TO SCALE

* MATCH WIDTH OF EXISTING SIDEWALK WHENEVER POSSIBLE.
** BREAKOVER AND DEPARTURE ANGLES SHOULD NOT EXCEED 10 DEGREES OR 17%

3 C023 DRIVEWAY RESTORATION DETAIL
AS SHOWN

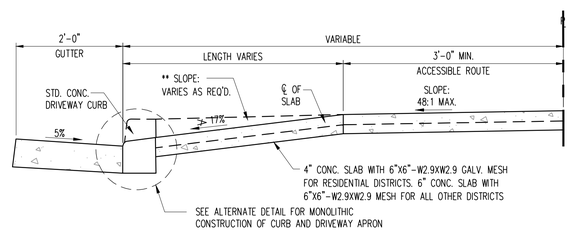

SECTION A-A
NOT TO SCALE

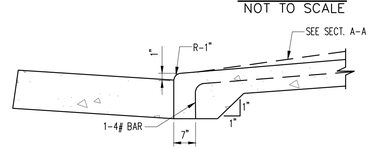

ALTERNATE DETAIL
NOT TO SCALE

NOTES:
1. FOR EXTENSION TO EXISTING DRIVEWAY, SCORING AND FINISH SHALL MATCH EXISTING SCORING AND FINISH. FOR DRIVEWAY CONSTRUCTED IN BUILT UP AREAS, SCORING CONFORMING TO SCORING AT ADJACENT DRIVEWAYS MAY BE AUTHORIZED

* THIS DETAIL IS GUIDANCE ONLY, A DESIGN DETAIL MAY BE REQUIRED FOR EACH SPECIFIC SITE. THE DETAIL MUST COMPLY WITH THE REQUIREMENTS SHOWN.

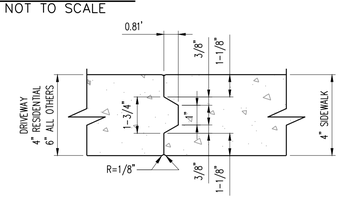

DETAIL "A"
NOT TO SCALE
(NEW CONSTRUCTION)

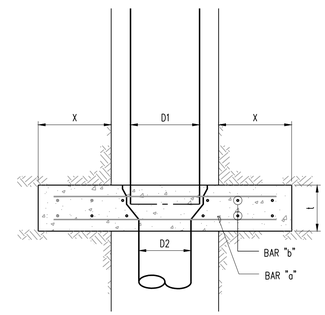

PLAN

WATER PRESSURE 150 PSI TYPE OF SOIL CONDITION																		
D1 PIPE (in.)	D2 PIPE (in.)	A		B		C		D		E		F		G		BAR "a" MIN	BAR "b" MIN.
		Y(ft)	X(ft)	Y(ft)	X(ft)	Y(ft)	X(ft)	Y(ft)	X(ft)	Y(ft)	X(ft)	Y(ft)	X(ft)	Y(ft)	X(ft)		
4	3	2.00	2.50	2.00	2.75	2.00	2.75	2.00	2.50	2.00	2.75	2.00	2.75	2.00	2.75	#4@12"	#4@12"
6	4	2.25	3.00	2.25	3.00	2.25	3.00	2.25	3.00	2.25	3.00	2.25	3.00	2.25	3.00	#4@12"	#4@12"
8	6	2.50	3.25	2.50	3.25	2.50	3.25	2.50	3.25	2.50	3.25	2.50	3.25	2.50	3.25	#4@12"	#4@12"
12	10	3.50	4.75	2.75	3.25	2.75	3.50	2.75	3.50	2.75	3.50	2.75	3.50	2.75	3.50	#4@12"	#5@12"
16	12	4.75	6.00	3.25	4.25	3.25	4.25	3.25	4.25	3.25	4.25	3.25	4.25	3.25	4.25	#4@6"	#5@12"
18	16	5.00	6.25	3.50	4.50	3.50	4.50	3.25	4.25	3.25	4.25	3.25	4.25	3.25	4.25	#4@6"	#5@8"
20	18	5.50	7.00	3.75	4.75	3.50	4.50	3.50	4.50	3.50	4.50	3.50	4.50	3.50	4.50	#4@6"	#5@8"
24	20	6.50	8.25	4.50	5.75	3.75	4.75	3.75	4.75	3.75	4.75	3.75	4.75	3.75	4.75	#5@6"	#5@8"
30	24	7.50	9.50	5.25	6.75	4.50	5.75	4.25	5.75	4.25	5.75	4.25	5.75	4.25	5.75	#5@6"	#5@6"
36	30	9.25	11.75	6.00	8.25	5.50	7.00	4.75	6.00	4.75	6.00	4.75	6.00	4.75	6.00	#6@6"	#5@6"
42	30	11.50	14.25	8.00	10.25	6.75	8.50	5.25	6.75	5.25	6.75	5.25	6.75	5.25	6.75	#7@6"	#6@6"

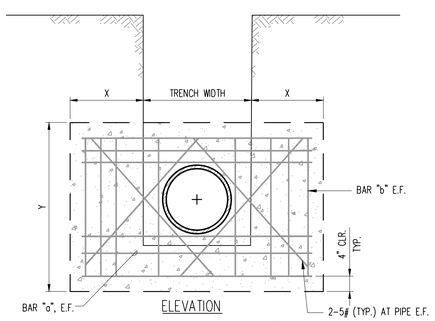

ELEVATION

TYPE OF SOIL CONDITION — LATERAL BEARING PRESSURE
A. SOFT CLAY;FINE LOOSE SAND . . . . . 500LBS. PER SQ. FT.
B. SAND & CLAY; MIXED OR LAYERS; FINED CONFINED SAND . . 1000LBS. PER SQ. FT.
C. HARD DRY CLAY . . . . . 1500LBS. PER SQ. FT.
D. COARSE SAND . . . . . 2000LBS. PER SQ. FT.
E. GRAVEL . . . . . 3000LBS. PER SQ. FT.
F. SOFT ROCK . . . . . 4000LBS. PER SQ. FT.
G. HARDPAN . . . . . 5000LBS. PER SQ. FT.

NOTE:
1. ACTUAL FIELD CONDITIONS AND SOIL TYPE SHALL BE VERIFIED IN THE FIELD. THE SCHEDULE, DIMENSIONS AND DETAILS AS SHOWN ARE PROVIDED AS A GUIDE ONLY. THE CONTRACTOR OR ENGINEER WHO PREPARED THE PLANS SHALL SUBMIT THE FINAL DESIGN AND DETAILS TO THE ASPA PROJECT MANAGER FOR REVIEW AND APPROVAL AFTER FIELD VERIFICATION AND PRIOR TO INSTALLATION.

2. ENGINEER SHALL EVALUATE SOIL CONDITIONS AND VERIFY THAT THE ALLOWABLE PRESSURE PROVIDED IS APPLICABLE BEFORE USING TABLES ABOVE.

4 C023 CONCRETE THRUST BEAM DETAIL
AS SHOWN

THIS DOCUMENT IS RELEASED FOR THE PURPOSE OF REVIEW UNDER THE AUTHORITY OF GARY COOVER STATE OF HAWAII 23369-C IT IS NOT TO BE USED FOR CONSTRUCTION
EXP DATE: 04/30/24

REVISION	BY	CHECKED BY	APR.	DATE

PREPARED BY:
CHECKED BY:
APPROVED BY:
ISSUE FOR:

AMERICAN SAMOA POWER AUTHORITY

ASPA WATER ENGINEERING DIVISION
TAFUNA, AMERICAN SAMOA
P.O.BOX PPB, PAGO PAGO AM SAMOA 96799.
TEL(684) 699-1333, FAX (684) 699-4035

PROJECT: ASBESTOS CEMENT PIPE REPLACEMENT AND WATER SYSTEM UPGRADE PROJECT - PAGO SITE
DRAWING TITLE: MISCELLANEOUS DETAILS - 4
PROJECT LOCATION: PAGO PAGO, TUTUILA ISLAND AMERICAN SAMOA

SCALE: AS SHOWN
PROJECT NO: --
DATE: MAY 2023
SHEET NO. C023

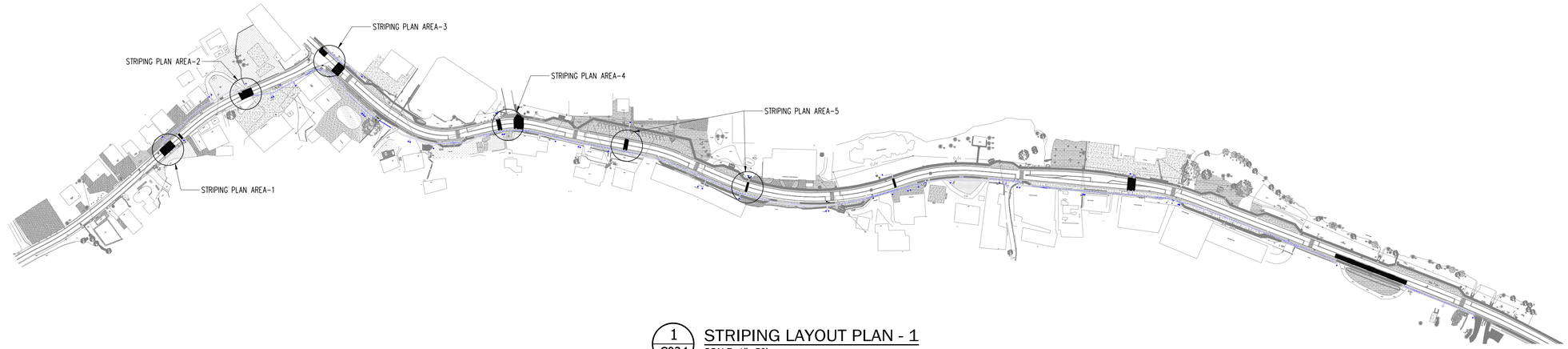

1 / C024 STRIPING LAYOUT PLAN - 1
SCALE: 1"=50'

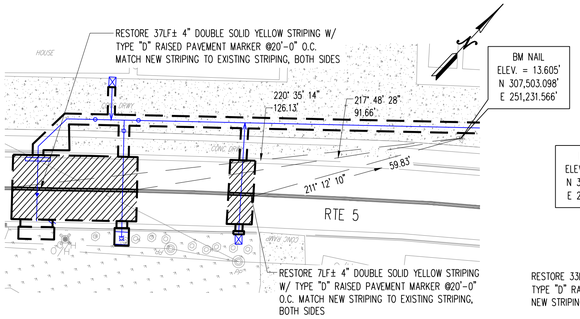

STRIPING PLAN AREA - 1
SCALE: 1":20'

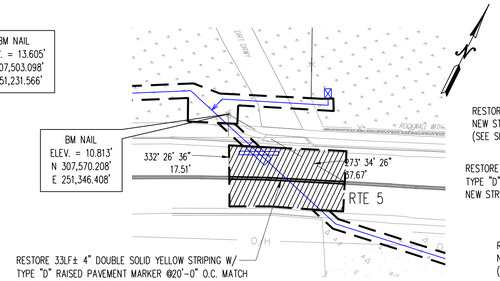

STRIPING PLAN AREA - 2
SCALE: 1":20'

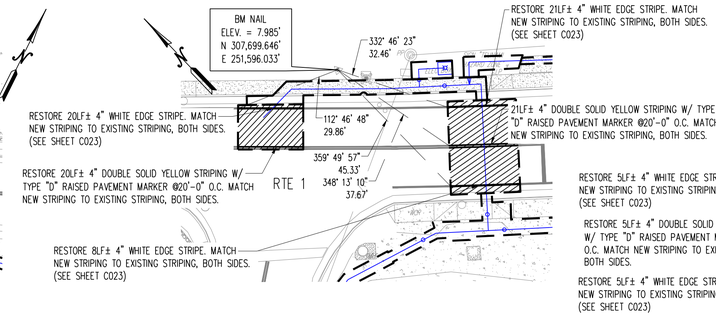

STRIPING PLAN AREA - 3
SCALE: 1":20'

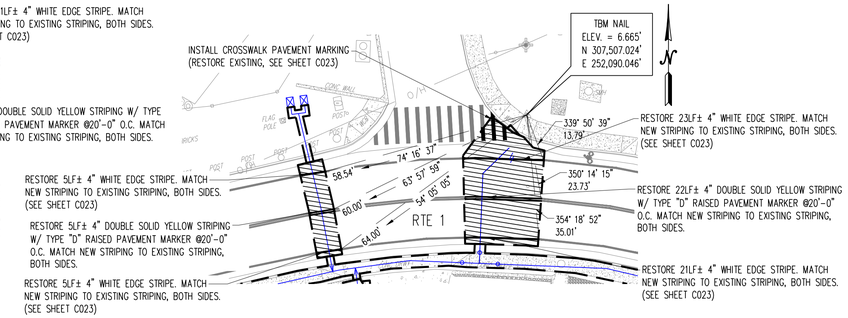

STRIPING PLAN AREA - 4
SCALE: 1":20'

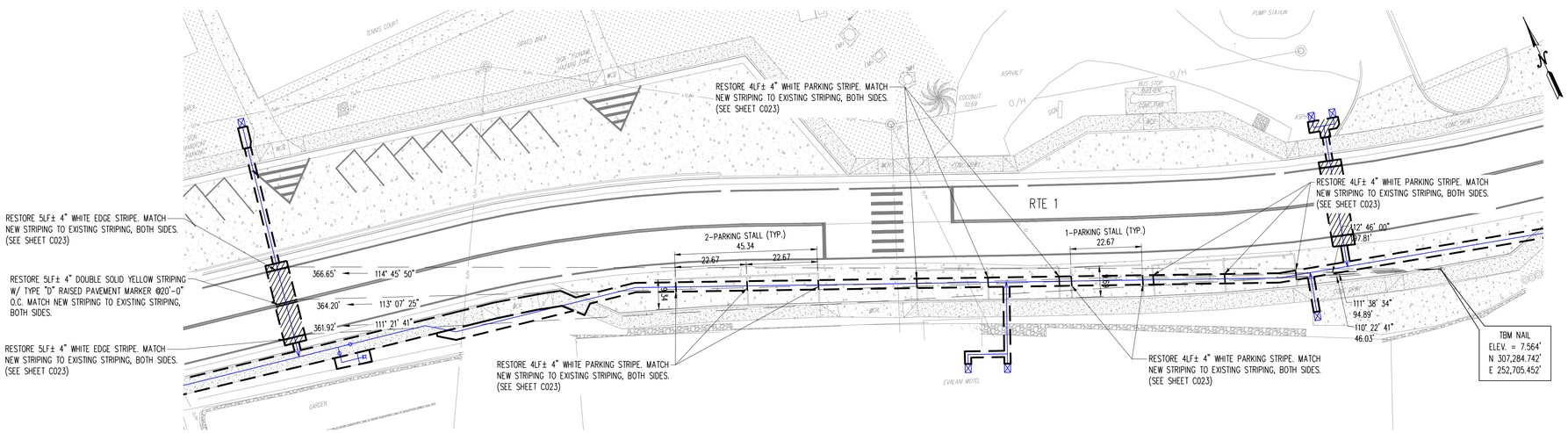

STRIPING PLAN AREA - 5
SCALE: 1":20'

LEGEND:

WATERLINE

LIMITS OF REPAVING

NOTES:

1. CONTRACTOR TO INSTALL NEW PAVEMENT STRIPINGS, REFLECTIVE MARKERS AND TRAFFIC LOOP DETECTORS DISTURBED DURING CONSTRUCTION.
2. SEE PLAN & PROFILE SHEETS FOR LOCATION OF ALL STRIPING, TRAFFIC LOOP DETECTORS, AND PHYSICAL OBJECTS (MANHOLE COVERS, VALVE COVERS, STREET MONUMENTS, ETC.) THAT NEED TO BE RESTORED OR REPLACED, FOR ALL ROADWAYS UNDER ASPA JURISDICTIONS.

GRAPHICAL SCALE:

20' 0 20' 40' 60'
SCALE: 1"=20'

50' 0 50' 100' 150'
SCALE: 1"=50'

THIS DOCUMENT IS RELEASED FOR THE PURPOSE OF REVIEW UNDER THE AUTHORITY OF GARY COOVER STATE OF HAWAII 23589-C IT IS NOT TO BE USED FOR CONSTRUCTION

EXP DATE: 04/30/24

REVISION	BY	CHECKED BY	APR.	DATE

PREPARED BY:
CHECKED BY:
APPROVED BY:
ISSUE FOR:

AMERICAN SAMOA POWER AUTHORITY

ASPA WATER ENGINEERING DIVISION
TAFUNA, AMERICAN SAMOA
P.O.BOX PPB, PAGO PAGO AM SAMOA 96799.
TEL(684) 699-1333, FAX (684) 699-4035

PROJECT: ASBESTOS CEMENT PIPE REPLACEMENT AND WATER SYSTEM UPGRADE PROJECT - PAGO SITE

DRAWING TITLE: STRIPING LAYOUT PLAN - 1

PROJECT LOCATION: PAGO PAGO, TUTUILA ISLAND AMERICAN SAMOA

SCALE: AS SHOWN
PROJECT NO: --
DATE: MAY 2023
SHEET NO. C024

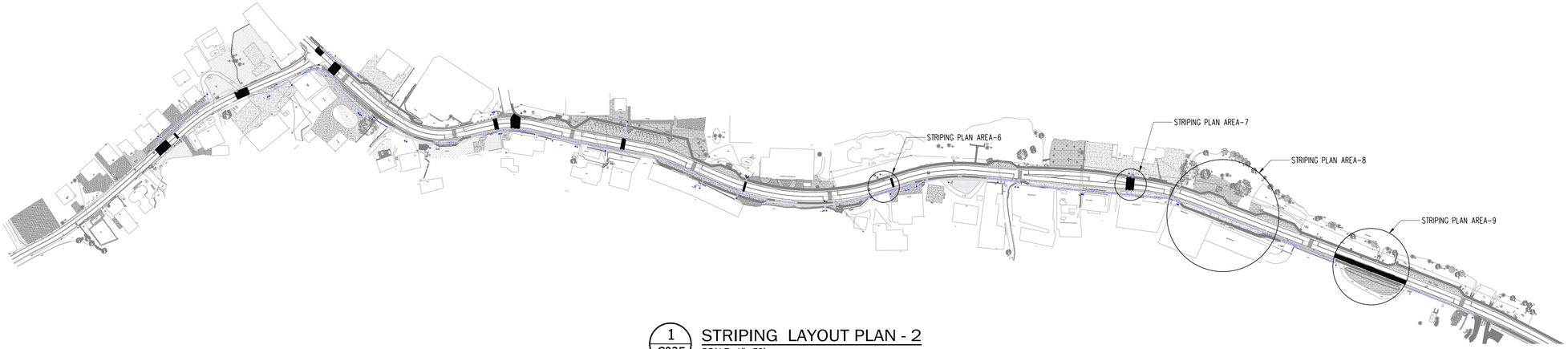

1 / C025 **STRIPING LAYOUT PLAN - 2**
SCALE: 1"=50'

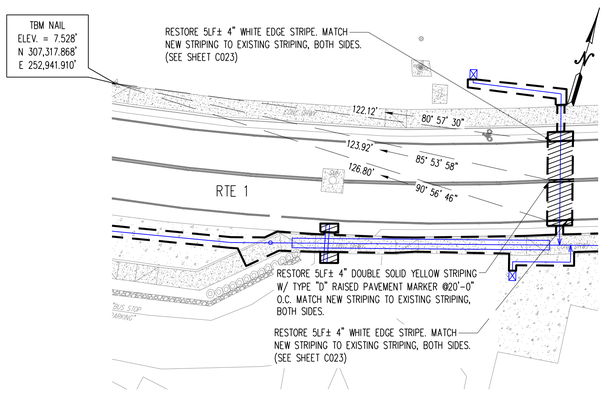

STRIPING PLAN AREA - 6
SCALE: 1":20'

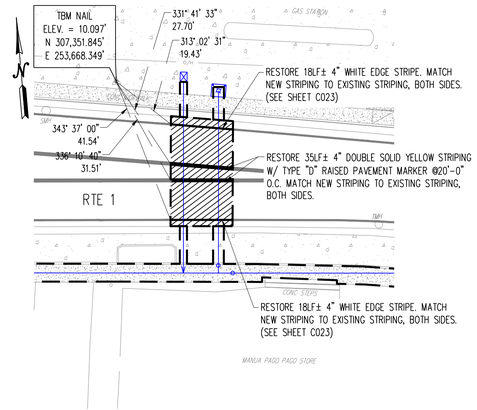

STRIPING PLAN AREA - 7
SCALE: 1":20'

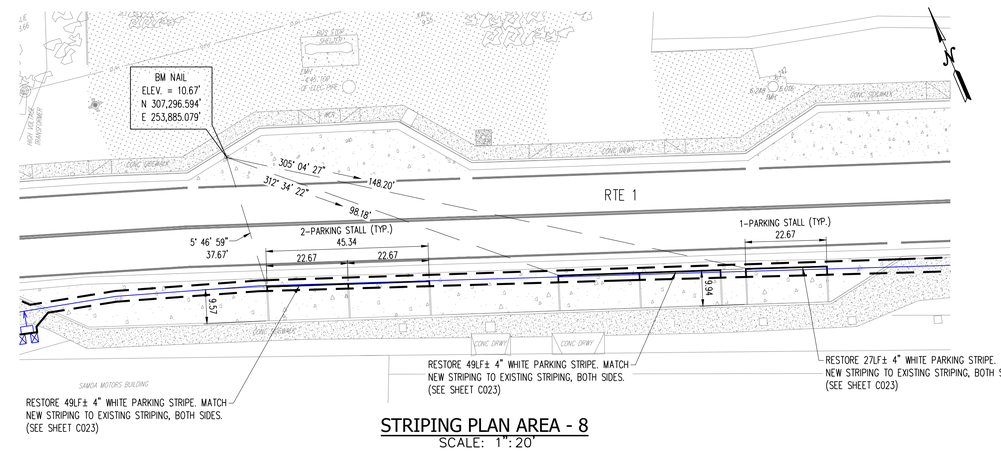

STRIPING PLAN AREA - 8
SCALE: 1":20'

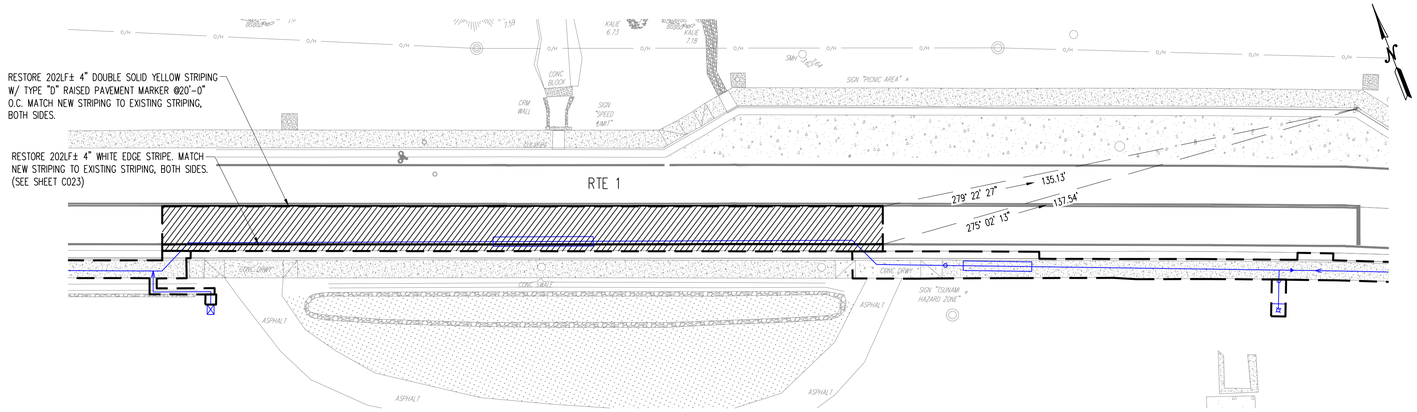

STRIPING PLAN AREA - 9
SCALE: 1":20'

LEGEND:

WATERLINE

LIMITS OF REPAVING

NOTES:

1. CONTRACTOR TO INSTALL NEW PAVEMENT STRIPINGS, REFLECTIVE MARKERS AND TRAFFIC LOOP DETECTORS DISTURBED DURING CONSTRUCTION
2. SEE PLAN & PROFILE SHEETS FOR LOCATION OF ALL STRIPING, TRAFFIC LOOP DETECTORS, AND PHYSICAL OBJECTS (MANHOLE COVERS, VALVE COVERS, STREET MONUMENTS, ETC.) THAT NEED TO BE RESTORED OR REPLACED, FOR ALL ROADWAYS UNDER ASPA JURISDICTIONS.

GRAPHICAL SCALE:

20' 0 20' 40' 60'
SCALE: 1"=20'
50' 0 50' 100' 150'
SCALE: 1"=50'

THIS DOCUMENT IS RELEASED FOR THE PURPOSE OF REVIEW UNDER THE AUTHORITY OF ERIC PAUL GUTIERREZ STATE OF HAWAII C-15889 IT IS NOT TO BE USED FOR CONSTRUCTION

EXP DATE: 04/30/24

REVISION	BY	CHECKED BY	APR.	DATE

PREPARED BY:
CHECKED BY:
APPROVED BY:
ISSUE FOR:

AMERICAN SAMOA POWER AUTHORITY

ASPA WATER ENGINEERING DIVISION
TAFUNA, AMERICAN SAMOA
P.O.BOX PPB, PAGO PAGO AM SAMOA 96799.
TEL(684) 699-1333, FAX (684) 699-4035

PROJECT: ASBESTOS CEMENT PIPE REPLACEMENT AND WATER SYSTEM UPGRADE PROJECT - PAGO SITE

DRAWING TITLE: STRIPING LAYOUT PLAN - 2

PROJECT LOCATION: PAGO PAGO, TUTUILA ISLAND AMERICAN SAMOA

SCALE: AS SHOWN

PROJECT NO.: --

DATE: MAY 2023

SHEET NO.: C025

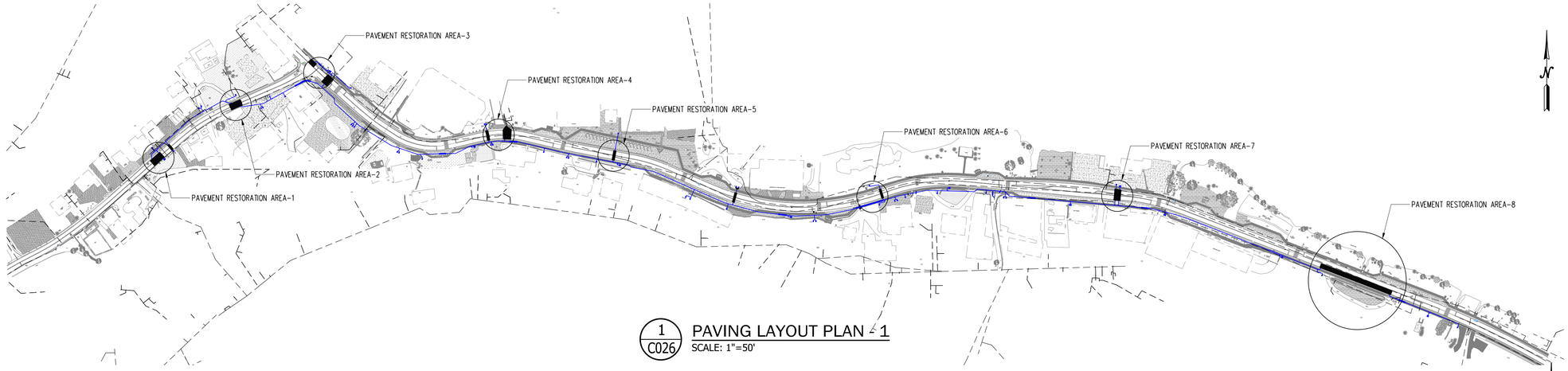

1 C026 PAVING LAYOUT PLAN - 1
SCALE: 1"=50'

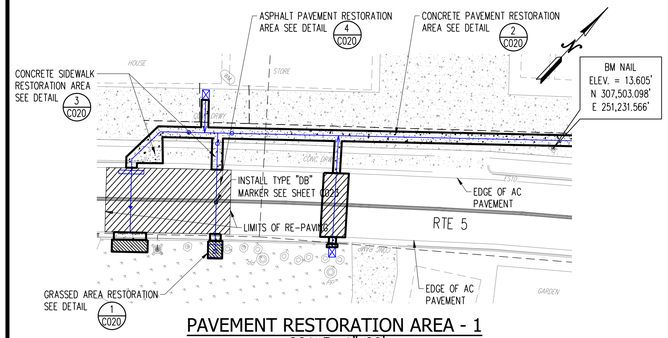

PAVEMENT RESTORATION AREA - 1
SCALE: 1":20'

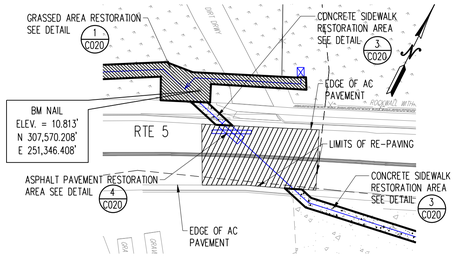

PAVEMENT RESTORATION AREA - 2
SCALE: 1":20'

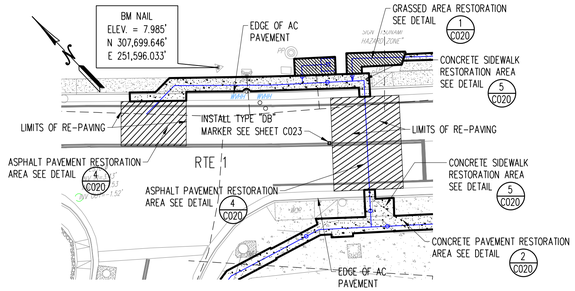

PAVEMENT RESTORATION AREA - 3
SCALE: 1":20'

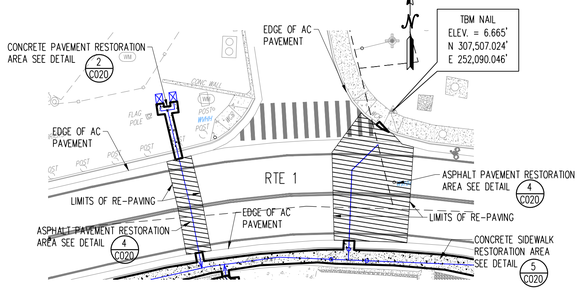

PAVEMENT RESTORATION AREA - 4
SCALE: 1":20'

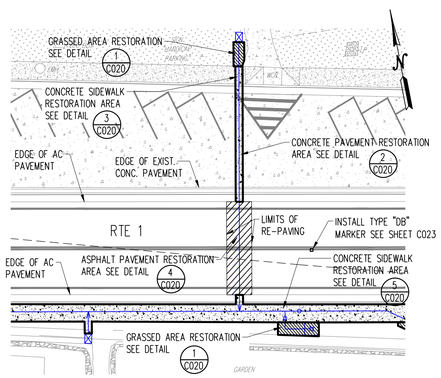

PAVEMENT RESTORATION AREA - 5
SCALE: 1":20'

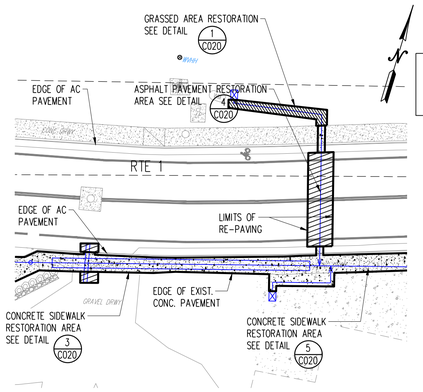

PAVEMENT RESTORATION AREA - 6
SCALE: 1":20'

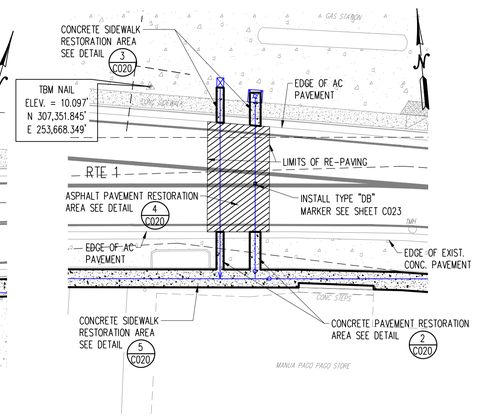

PAVEMENT RESTORATION AREA - 7
SCALE: 1":20'

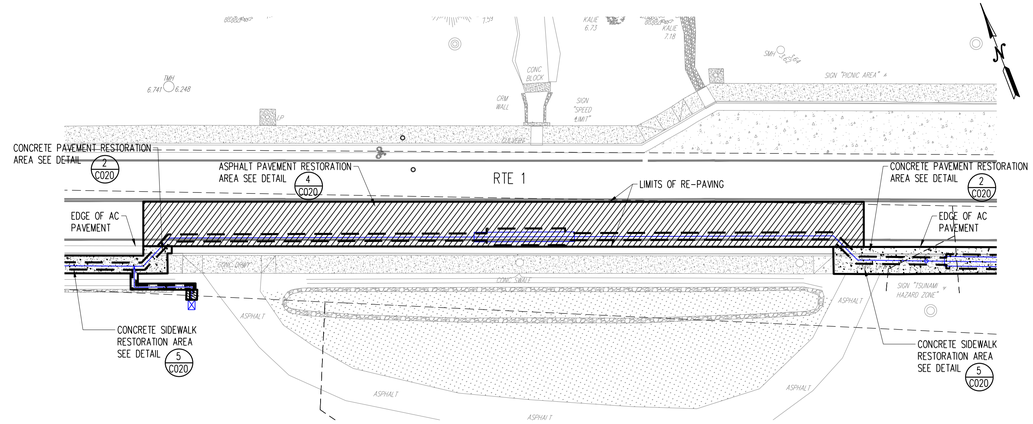

PAVEMENT RESTORATION AREA - 8
SCALE: 1":20'

LEGEND:

- WATERLINE
- TRENCH RESTORATION LIMIT
- PAVEMENT AREA

NOTE:

1. CONTRACTOR TO INSTALL NEW PAVEMENT STRIPINGS, REFLECTIVE MARKERS AND TRAFFIC LOOP DETECTORS DISTURBED DURING CONSTRUCTION
2. SEE PLAN & PROFILE SHEETS FOR LOCATION OF ALL STRIPING, TRAFFIC LOOP DETECTORS, AND PHYSICAL OBJECTS (MANHOLE COVERS, VALVE COVERS, STREET MONUMENTS, ETC.) THAT NEED TO BE RESTORED OR REPLACED, FOR ALL ROADWAYS UNDER ASPA JURISDICTIONS.

GRAPHICAL SCALE:

20' 0 20' 40' 60'
SCALE: 1"=20'

50' 0 50' 100' 150'
SCALE: 1"=50'

THIS DOCUMENT IS RELEASED FOR THE PURPOSE OF REVIEW UNDER THE AUTHORITY OF MARK D. MCDONALD STATE OF HAWAII 9889-C IT IS NOT TO BE USED FOR CONSTRUCTION

EXP DATE: 04/30/24

REVISION	BY	CHECKED BY	APR.	DATE

PREPARED BY:
CHECKED BY:
APPROVED BY:
ISSUE FOR:

AMERICAN SAMOA POWER AUTHORITY
ASPA WATER ENGINEERING DIVISION
TAFUNA, AMERICAN SAMOA
P.O.BOX PPB, PAGO PAGO AM SAMOA 96799.
TEL(684) 699-1333, FAX (684) 699-4035

PROJECT: ASBESTOS CEMENT PIPE REPLACEMENT AND WATER SYSTEM UPGRADE PROJECT - PAGO SITE

DRAWING TITLE: PAVING LAYOUT PLAN

PROJECT LOCATION: PAGO PAGO, TUTUILA ISLAND AMERICAN SAMOA

SCALE: AS SHOWN
PROJECT NO: --
DATE: MAY 2023
SHEET NO. C026

NOTES:

1. CW20-1Ad SIGN REQUIRED FOR POSTED SPEED LIMIT OF 45 M.P.H. OR GREATER.
2. SEE TABLE 1 FOR ADDITIONAL DIMENSIONS.
3. ONE LANE ROAD (CW20-4) AND FLAGGER AHEAD (CW20-7) SIGN SHALL BE REMOVED OR COVERED WHEN NO WORK IS BEING PERFORMED AND LANE IS NOT CLOSED.
4. THE ADVISORY SPEED SHALL BE DETERMINED BY THE ASPA ENGINEER.

LEGEND

- WORK AREA
- DIRECTION OF TRAFFIC
- CONE OR DELINEATOR
- SIGN

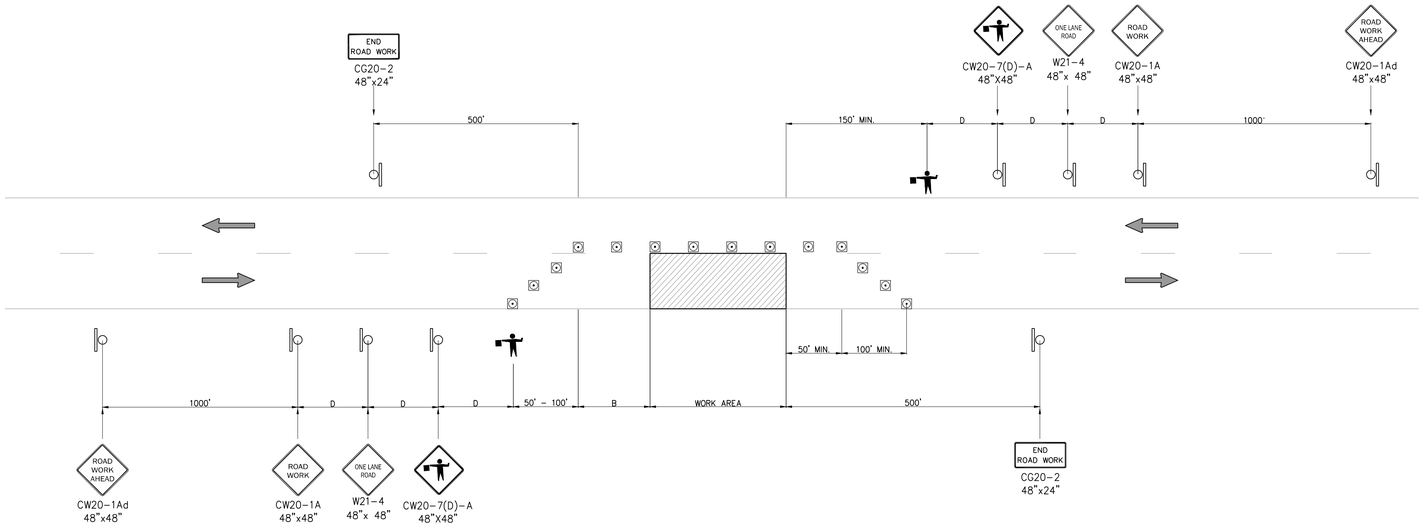

1 / C027 TWO-LANE - ONE LANE CLOSED
SCALE: NTS

GENERAL NOTES:

1. THE PERMITTEE SHALL MAKE MINOR ADJUSTMENTS AT INTERSECTIONS, DRIVEWAYS, BRIDGES, STRUCTURES, ETC., TO FIT FIELD CONDITIONS.
2. CONES OR DELINEATORS SHALL BE EXTENDED TO A POINT WHERE THEY ARE VISIBLE TO APPROACHING TRAFFIC.
3. TRAFFIC CONTROL DEVICES SHALL BE INSTALLED SUCH THAT THE SIGN OR DEVICE FARTHEST FROM THE WORK AREA SHALL BE PLACED FIRST. THE OTHERS SHALL THEN BE PLACED PROGRESSIVELY TOWARD THE WORK AREA.
4. REGULATORY AND WARNING SIGNS WITHIN THE CONSTRUCTION ZONE THAT ARE IN CONFLICT WITH THE TRAFFIC CONTROL PLANS SHALL BE REMOVED OR COVERED. ALL SIGNS SHALL BE RESTORED UPON COMPLETION OF THE WORK.
5. FLAGGERS AND/OR POLICE OFFICERS SHALL BE IN SIGHT OF EACH OTHER OR IN DIRECT COMMUNICATION AT ALL TIMES.
6. WHEN REQUIRED BY THE ISSUING OFFICE, THE PERMITTEE SHALL INSTALL A FLASHING ARROW SIGNAL AS SHOWN ON THE TRAFFIC CONTROL PLANS.
7. SIGN SPACING (L), TAPER LENGTHS (T) AND SPACINGS OF CONES OR DELINEATORS SHALL BE AS SHOWN IN TABLE 1, UNLESS OTHERWISE NOTED ON THE TRAFFIC CONTROL PLANS.
8. ALL TRAFFIC LANES SHALL BE A MINIMUM OF 10 FEET WIDE.
9. ALL CONSTRUCTION WARNING SIGNS SHALL BE PROMPTLY REMOVED OR COVERED WHENEVER THE MESSAGE IS NOT APPLICABLE OR NOT IN USE.
10. THE BACKS OF ALL SIGNS USED FOR TRAFFIC CONTROL SHALL BE APPROPRIATELY COVERED TO PRECLUDE THE DISPLAY OF INAPPLICABLE SIGN MESSAGES (I.E., WHEN SIGNS HAVE MESSAGES ON BOTH FACES).
11. AT THE END OF EACH DAY'S WORK OR AS SOON AS THE WORK IS COMPLETED, THE PERMITTEE SHALL REMOVE ALL TRAFFIC CONTROL DEVICES NO LONGER NEEDED TO PERMIT FREE AND SAFE PASSAGE OF PUBLIC TRAFFIC. REMOVAL SHALL BE IN THE REVERSE ORDER OF INSTALLATION.
12. REPLACE PERMANENT PAVEMENT MARKINGS AND TRAFFIC SIGNS UPON COMPLETION OF EACH PHASE OF WORK.
13. ALL WORK ZONE TRAFFIC CONTROL DEVICES SHALL COMPLY WITH THE "STATEWIDE GUIDELINE FOR WORK ZONE TRAFFIC CONTROL DEVICES"DATED SEPTEMBER 13, 2000 AND BE COMPLIANT WITH CHAPTER 6 OF THE MUTCD.

NOTES:

1. THIS PLAN MAY BE USED ONLY IF ALL ROAD WORK, INCLUDING EQUIPMENT AND WORKERS ARE OFF THE TRAVEL WAY.
2. SEE TABLE 1 FOR ADDITIONAL DIMENSIONS.
3. ENGINEER WILL DETERMINE IF ADVISORY SPEED SIGN IS NECESSARY.
4. CONTRACTOR WILL PROVIDE NECESSARY ADJUSTMENTS TO ACCOMMODATE BICYCLISTS AND PEDESTRIANS.
5. CW20-1Ad SIGN REQUIRED FOR POSTED SPEED LIMIT OF 45 M.P.H. OR GREATER.
6. SIGNING IS NOT REQUIRED IF THE WORK AREA INCLUDING EQUIPMENT AND WORKERS IS OUTSIDE THE CLEAR ZONE DISTANCE AS SPECIFIED IN THE LATEST AASHTO ROADSIDE DESIGN GUIDE.

LEGEND

- WORK AREA
- DIRECTION OF TRAFFIC
- CONE OR DELINEATOR
- SIGN

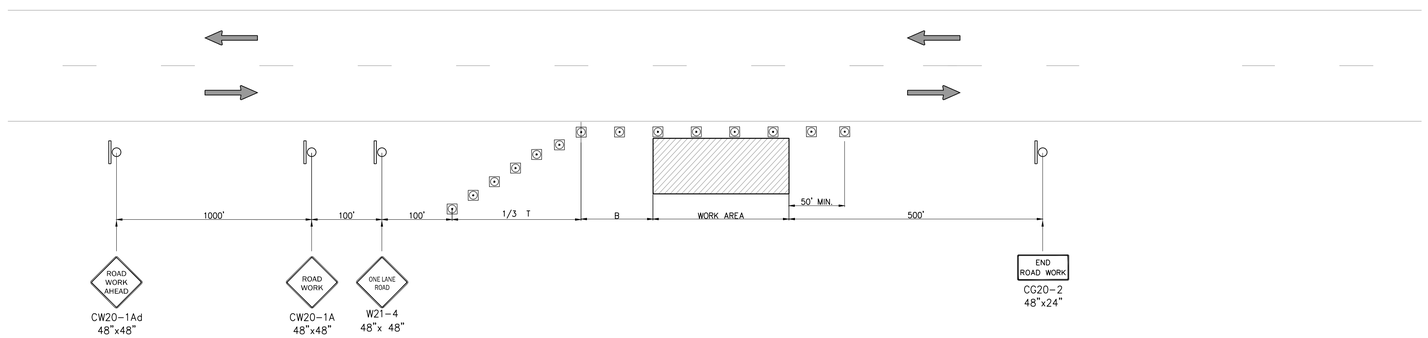

2 / C027 WORKING ON SHOULDER OR ROADSIDE
SCALE: NTS

TABLE 1 - FOR TRAFFIC CONTROL PLAN

POSTED SPEED LIMIT (M.P.H.)	SIGN SPACING (D) (FEET)	TAPER LENGTH (T) (FEET)		LONGITUDINAL BUFFER SPACE (B) (FEET)	SPACING OF CONES OR DELINEATORS (FEET)		
		W = 12' OR LESS *	W = GREATER THAN 12' *		TAPER	TANGENT	WORK AREA
20	250	200	W X 17	35	20	20	10
25	250	200	W X17	55	25	25	10
30	250	250	W X 20	85	30	30	10
35	250	250	W X 20	120	35	35	10
40	500	350	W X 30	170	40	40	10
45	500	550	W X 45	220	45	45	10
50	1000	600	W X 50	280	50	50	10
55	1000	700	W X 55	335	55	55	10

* W = WIDTH OF LANE OR SHOULDER

SIGN:

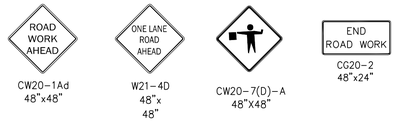

THIS DOCUMENT IS RELEASED FOR THE PURPOSE OF REVIEW UNDER THE AUTHORITY OF GARY COOVER STATE OF HAWAII 23589-C IT IS NOT TO BE USED FOR CONSTRUCTION
EXP DATE: 04/30/24

REVISION	BY	CHECKED BY	APR.	DATE

PREPARED BY:
CHECKED BY:
APPROVED BY:
ISSUE FOR:

AMERICAN SAMOA POWER AUTHORITY
ASPA WATER ENGINEERING DIVISION
TAFUNA, AMERICAN SAMOA
P.O.BOX PPB, PAGO PAGO AM SAMOA 96799.
TEL(684) 699-1333, FAX (684) 699-4035

PROJECT: ASBESTOS CEMENT PIPE REPLACEMENT AND WATER SYSTEM UPGRADE PROJECT - PAGO SITE

DRAWING TITLE: TRAFFIC CONTROL PLAN - 1

PROJECT LOCATION: PAGO PAGO, TUTUILA ISLAND AMERICAN SAMOA

SCALE: AS SHOWN

PROJECT NO: --

DATE: MAY 2023

SHEET NO. C027

NOTES:

1. CW20-1Ad SIGN REQUIRED FOR POSTED SPEED LIMIT OF 45 M.P.H. OR GREATER.
2. SEE TABLE 1 FOR ADDITIONAL DIMENSIONS.
3. ONE LANE ROAD (CW20-4) AND FLAGGER AHEAD (CW20-7) SIGN SHALL BE REMOVED OR COVERED WHEN NO WORK IS BEING PERFORMED AND LANE IS NOT CLOSED.
4. THE ADVISORY SPEED SHALL BE DETERMINED BY THE ASPA ENGINEER.

LEGEND

- WORK AREA
- DIRECTION OF TRAFFIC
- CONE OR DELINEATOR
- SIGN

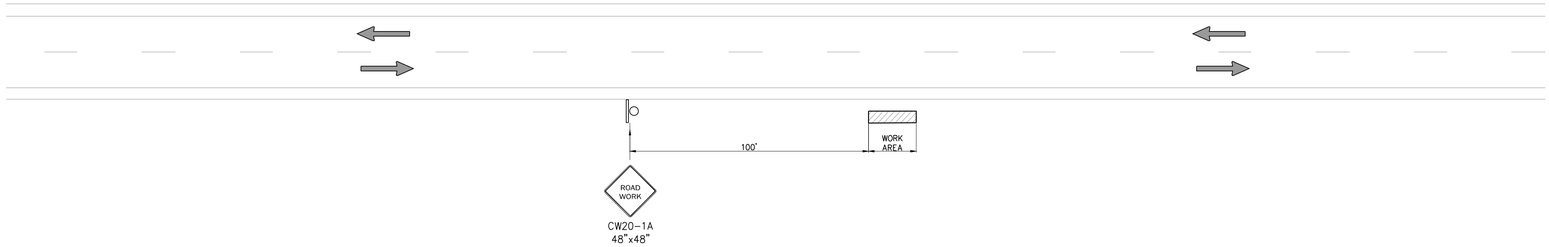

1 / C028 **WORK BEYOND THE SHOULDER**
SCALE: NTS

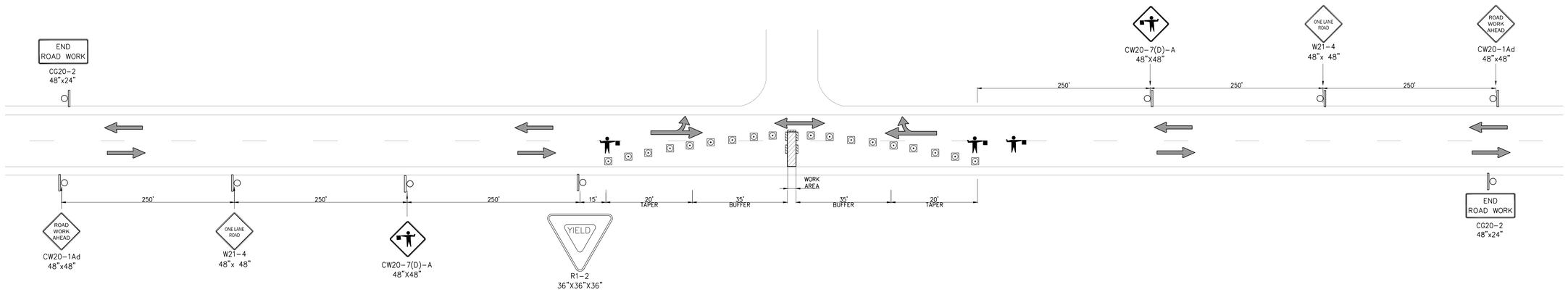

2 / C028 **WORKING ON INTERSECTION**
SCALE: NTS

NOTES:

1. THIS PLAN MAY BE USED ONLY IF ALL ROAD WORK, INCLUDING EQUIPMENT AND WORKERS ARE OFF THE TRAVEL WAY.
2. SEE TABLE 1 FOR ADDITIONAL DIMENSIONS.
3. ENGINEER WILL DETERMINE IF ADVISORY SPEED SIGN IS NECESSARY.
4. CONTRACTOR WILL PROVIDE NECESSARY ADJUSTMENTS TO ACCOMMODATE BICYCLISTS AND PEDESTRIANS.
5. CW20-1Ad SIGN REQUIRED FOR POSTED SPEED LIMIT OF 45 M.P.H. OR GREATER.
6. SIGNING IS NOT REQUIRED IF THE WORK AREA INCLUDING EQUIPMENT AND WORKERS IS OUTSIDE THE CLEAR ZONE DISTANCE AS SPECIFIED IN THE LATEST AASHTO ROADSIDE DESIGN GUIDE.

LEGEND

- WORK AREA
- DIRECTION OF TRAFFIC
- CONE OR DELINEATOR
- SIGN

SIGN:

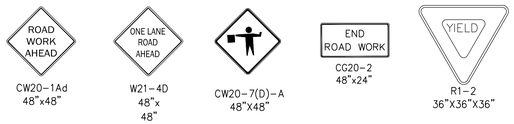

TABLE 1 - FOR TRAFFIC CONTROL PLAN

POSTED SPEED LIMIT (M.P.H.)	SIGN SPACING (D) (FEET)	TAPER LENGTH (T) (FEET)		LONGITUDINAL BUFFER SPACE (B) (FEET)	SPACING OF CONES OR DELINEATORS (FEET)		
		W = 12' OR LESS *	W = GREATER THAN 12' *		TAPER	TANGENT	WORK AREA
20	250	200	W X 17	35	20	20	10
25	250	200	W X17	55	25	25	10
30	250	250	W X 20	85	30	30	10
35	250	250	W X 20	120	35	35	10
40	500	350	W X 30	170	40	40	10
45	500	550	W X 45	220	45	45	10
50	1000	600	W X 50	280	50	50	10
55	1000	700	W X 55	335	55	55	10

* W = WIDTH OF LANE OR SHOULDER

GENERAL NOTES:

1. THE PERMITTEE SHALL MAKE MINOR ADJUSTMENTS AT INTERSECTIONS, DRIVEWAYS, BRIDGES, STRUCTURES, ETC., TO FIT FIELD CONDITIONS.
2. CONES OR DELINEATORS SHALL BE EXTENDED TO A POINT WHERE THEY ARE VISIBLE TO APPROACHING TRAFFIC.
3. TRAFFIC CONTROL DEVICES SHALL BE INSTALLED SUCH THAT THE SIGN OR DEVICE FARTHEST FROM THE WORK AREA SHALL BE PLACED FIRST. THE OTHERS SHALL THEN BE PLACED PROGRESSIVELY TOWARD THE WORK AREA.
4. REGULATORY AND WARNING SIGNS WITHIN THE CONSTRUCTION ZONE THAT ARE IN CONFLICT WITH THE TRAFFIC CONTROL PLANS SHALL BE REMOVED OR COVERED. ALL SIGNS SHALL BE RESTORED UPON COMPLETION OF THE WORK.
5. FLAGGERS AND/OR POLICE OFFICERS SHALL BE IN SIGHT OF EACH OTHER OR IN DIRECT COMMUNICATION AT ALL TIMES.
6. WHEN REQUIRED BY THE ISSUING OFFICE, THE PERMITTEE SHALL INSTALL A FLASHING ARROW SIGNAL AS SHOWN ON THE TRAFFIC CONTROL PLANS.
7. SIGN SPACING (L), TAPER LENGTHS (T) AND SPACINGS OF CONES OR DELINEATORS SHALL BE AS SHOWN IN TABLE 1, UNLESS OTHERWISE NOTED ON THE TRAFFIC CONTROL PLANS.
8. ALL TRAFFIC LANES SHALL BE A MINIMUM OF 10 FEET WIDE.
9. ALL CONSTRUCTION WARNING SIGNS SHALL BE PROMPTLY REMOVED OR COVERED WHENEVER THE MESSAGE IS NOT APPLICABLE OR NOT IN USE.
10. THE BACKS OF ALL SIGNS USED FOR TRAFFIC CONTROL SHALL BE APPROPRIATELY COVERED TO PRECLUDE THE DISPLAY OF INAPPLICABLE SIGN MESSAGES (I.E., WHEN SIGNS HAVE MESSAGES ON BOTH FACES).
11. AT THE END OF EACH DAY'S WORK OR AS SOON AS THE WORK IS COMPLETED, THE PERMITTEE SHALL REMOVE ALL TRAFFIC CONTROL DEVICES NO LONGER NEEDED TO PERMIT FREE AND SAFE PASSAGE OF PUBLIC TRAFFIC. REMOVAL SHALL BE IN THE REVERSE ORDER OF INSTALLATION.
12. REPLACE PERMANENT PAVEMENT MARKINGS AND TRAFFIC SIGNS UPON COMPLETION OF EACH PHASE OF WORK.
13. ALL WORK ZONE TRAFFIC CONTROL DEVICES SHALL COMPLY WITH THE "STATEWIDE GUIDELINE FOR WORK ZONE TRAFFIC CONTROL DEVICES" DATED SEPTEMBER 13, 2000 AND BE COMPLIANT WITH CHAPTER 6 OF THE MUTCD.

THIS DOCUMENT IS NOT VALID FOR THE PURPOSE OF REVIEW UNDER THE AUTHORITY OF GREY GOOVER STATE OF HAWAII #13689-C IT IS NOT TO BE USED FOR CONSTRUCTION.

EXP DATE: 04/30/24

REVISION	BY	CHECKED BY	APR.	DATE

PREPARED BY:
CHECKED BY:
APPROVED BY:
ISSUE FOR:

AMERICAN SAMOA POWER AUTHORITY

ASPA WATER ENGINEERING DIVISION
TAFUNA, AMERICAN SAMOA
P.O.BOX PPB, PAGO PAGO AM SAMOA 96799.
TEL(684) 699-1333, FAX (684) 699-4035

PROJECT: ASBESTOS CEMENT PIPE REPLACEMENT AND WATER SYSTEM UPGRADE PROJECT - PAGO SITE

DRAWING TITLE: TRAFFIC CONTROL PLAN - 2

PROJECT LOCATION: PAGO PAGO, TUTUILA ISLAND AMERICAN SAMOA

SCALE: AS SHOWN

PROJECT NO.: --

DATE: MAY 2023

SHEET NO.: C028

GENERAL NOTES

A. GENERAL

1. ALL REINFORCED CONCRETE WORK SHALL BE DONE IN ACCORDANCE WITH THE ACI – 318 –14 BUILDING CODE, AND ALL STRUCTURAL STEEL WORK SHALL BE DONE IN ACCORDANCE WITH AISC SPECIFICATIONS (LATEST EDITION).
2. THE CONTRACTOR SHALL VERIFY ALL DIMENSIONS AND CONDITIONS AT THE SITE, AND SHALL NOTIFY THE ENGINEER OF DISCREPANCIES BETWEEN ACTUAL CONDITIONS AND INFORMATION SHOWN ON THE DRAWINGS BEFORE PROCEEDING WITH THE WORK. THIS SHALL INCLUDE THE LOCATION AND DIMENSIONS OF GROOVES, REGLETS, SLEEVES, CURBS, OPENINGS, EMBEDDED OR ATTACHED ITEMS, ETC.
3. FOR THE INTERPRETATION OF THESE DRAWINGS, INDICATED DIMENSIONS SHALL GOVERN AND DISTANCES OR SIZES SHALL NOT BE SCALED FOR CONSTRUCTION PURPOSES.

B. NOTES ON CONCRETE MIXES AND PLACING

1. UNLESS OTHERWISE INDICATED IN PLANS OR NOTED IN THE SPECIFICATIONS THE MINIMUM 28–DAYS CYLINDER COMPRESSIVE STRENGTH OF CONCRETE f'C, SHALL BE AS FOLLOWS:
   1. FOUNDATION..... fc' = 4000 psi
   2. PEDESTAL/ TIE BEAMS/..... fc' = 4000 psi
   3. SLAB ON GRADE..... fc' = 4000 psi
2. CONCRETE SHALL BE DEPOSITED IN ITS FINAL POSITION WITHOUT SEGREGATION, RE–HANDLING OR FLOWING. PLACING SHALL BE DONE PREFERABLY WITH BUGGIES, BUCKETS OR WHEEL BARROWS. NO CHUTES WILL BE ALLOWED EXCEPT TO TRANSFER CONCRETE FROM HOPPERS TO BUGGIES, WHEEL BARROWS OR BUCKETS, IN WHICH CASE, THEY SHALL NOT EXCEED 20'–0" IN AGGREGATE LENGTH NO DEPOSITING OF CONCRETE SHALL BE ALLOWED WITHOUT THE USE OF VIBRATORS UNLESS AUTHORIZED IN WRITING BY THE STRUCTURAL ENGINEER AND ONLY FOR UNUSUAL CONDITIONS WHERE VIBRATION IS EXTREMELY DIFFICULT TO ACCOMPLISH.

C. NOTES ON REINFORCING STEEL BARS

1. ALL REINFORCING STEEL BARS SHALL BE NEW BILLET, HOT ROLLED, WELDABLE AND COATED DEFORMED BARS CONFORMING TO THE SPECIFICATIONS OF (ASTM 615)WHOSE GRADE IS SHOWN BELOW:

   ALL BARS GREATER THAN #3 AND ABOVE, GRADE 60

   MINIMUM YIELD STRENGTH : Fy = 60KSI
2. ALL CONCRETE REINFORCEMENT SHALL BE DETAILED, FABRICATED, LABELED, SUPPORTED AND SPACED IN FORMS, SECURED IN THE REQUIRED LOCATION IN ACCORDANCE WITH THE PROCEDURES AND REQUIREMENTS OUTLINED IN THE LATEST EDITION OF THE BUILDING CODE AND THE MANUAL OF STANDARD PRACTICE FOR DETAILING REINFORCED CONCRETE STRUCTURES.
3. ALL REINFORCING BARS SHALL BE CLEANED THOROUGHLY OF ALL LOOSE RUST, SOIL OR OTHER MATERIAL IMMEDIATELY PRIOR TO PLACING CONCRETE.

D. STRUCTURAL STEEL/CONNECTION BOLTS/ANCHOR BOLTS/WELDS

1. ALL STRUCTURAL STEEL SHALL HAVE A MINIMUM YIELD STRENGTH, Fy = 36 KSI AND SHALL CONFORM TO ASTM A36 UNLESS OTHERWISE SPECIFIED ON PLANS.
2. UNLESS OTHERWISE INDICATED, ALL CONNECTION BOLTS SHALL CONFORM TO ASTM A325 SPECIFICATIONS.
3. UNLESS OTHERWISE INDICATED, ALL ANCHOR BOLTS SHALL CONFORM TO ASTM F1554 SPECIFICATIONS.
4. UNLESS OTHERWISE INDICATED, WELDING ELECTRODES SHALL BE E70XX.

E. SEISMIC DESIGN PARAMETER

1. SEISMIC CLASS = F
2. MAPPED SHORT PERIOD SPECTRAL ACCELERATION, S_s = 0.44
3. MAPPED SHORT PERIOD SPECTRAL ACCELERATION, S_1 = 0.15

F. FOUNDATION NOTES:

1. FOUNDATIONS ARE DESIGNED BASED ON THE BEARING CAPACITY 2500 PSF ENGINEER OF RECORDS REQUIRES THE OWNER TO HAVE THE SOIL TESTING. CONTRACTOR SHALL REPORT TO ENGINEER ON RECORD THE ACTUAL SOIL CAPACITY PRIOR TO CONSTRUCTIONS.
2. PROVIDE TEMPORARY REMOVAL OF WATER FROM ANY SOURCE DURING CONSTRUCTION.
3. CONTRACTOR SHALL DESIGN, INSTALL AND MONITOR EXCAVATIONS RETENTION SYSTEMS, AS REQUIRED FOR PROTECTION OF ADJACENT PROPERTIES AND PROVIDE ALL MEASURES AND PRECAUTIONS NECESSARY TO MINIMIZE SETTLEMENT AND PREVENT DAMAGE TO ADJACENT EXISTING OR NEW CONSTRUCTION.

G. WATER LINES

1. COLD WATER LINES SHALL BE GALVANIZED STEEL PIPE, SCHEDULE 40 CONFORMING TO ASTM A53 OR ASTM A120

H. FORMWORKS

1. FORMS SHALL BE PROVIDED FOR ALL CONCRETE NOT INDICATED OR SPECIFIED OTHERWISE. THE CONTRACTOR SHALL BE RESPONSIBLE FOR THE ADEQUACY OF FORMS AND FORM SUPPORTS. ALL FORMWORKS SHALL BE PROVIDED WITH ADEQUATE CLEAN–OUT OPENINGS TO PERMIT INSPECTION AND EASY CLEANING AFTER ALL REINFORCEMENT HAS BEEN PLACED. ALL FORMS SHALL BE CONSTRUCTED SO THAT THEY CAN BE REMOVED WITHOUT DAMAGING THE CONCRETE.
2. FORMS SHALL BE REMOVED IN A MANNER WHICH WILL PREVENT DAMAGE TO THE CONCRETE. FORMS SHALL NOT BE REMOVED, WITHOUT APPROVAL OF THE ENGINEER, OR BEFORE EXPIRATION OF THE MINIMUM PANELS SPECIFIED HEREIN;

	DAYS AFTER PLACING FORMS
FOR COLUMNS (LIFTS, 14ft AND UNDER)	1
FORMS FOR COLUMNS (LIFTS OVER 14ft.)	7

REVISION	BY	CHECKED BY	APR.	DATE

PREPARED BY:

CHECKED BY:

APPROVED BY:

ISSUED BY:

AMERICAN SAMOA POWER AUTHORITY

ASPA WATER ENGINEERING DIVISION
TAFUNA, AMERICAN SAMOA
P.O.BOX PPB, PAGO PAGO AM SAMOA 96799.
TEL(684) 699-1333, FAX (684) 699-4035

PROJECT: ASBESTOS CEMENT PIPE REPLACEMENT AND WATER SYSTEM UPGRADE PROJECT – PAGO SITE

DRAWING TITLE: GENERAL NOTES

PROJECT LOCATION: PAGO PAGO, TUTUILA ISLAND AMERICAN SAMOA

SCALE: NTS

PROJECT NO.

DATE: NOVEMBER 2023

SHEET NO. S–0

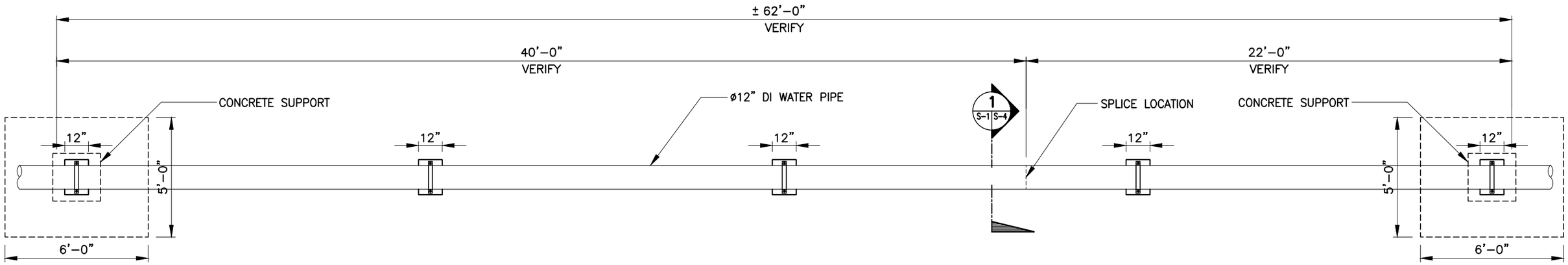

1 GENERAL PLAN

S-1 S-1 SCALE NTS

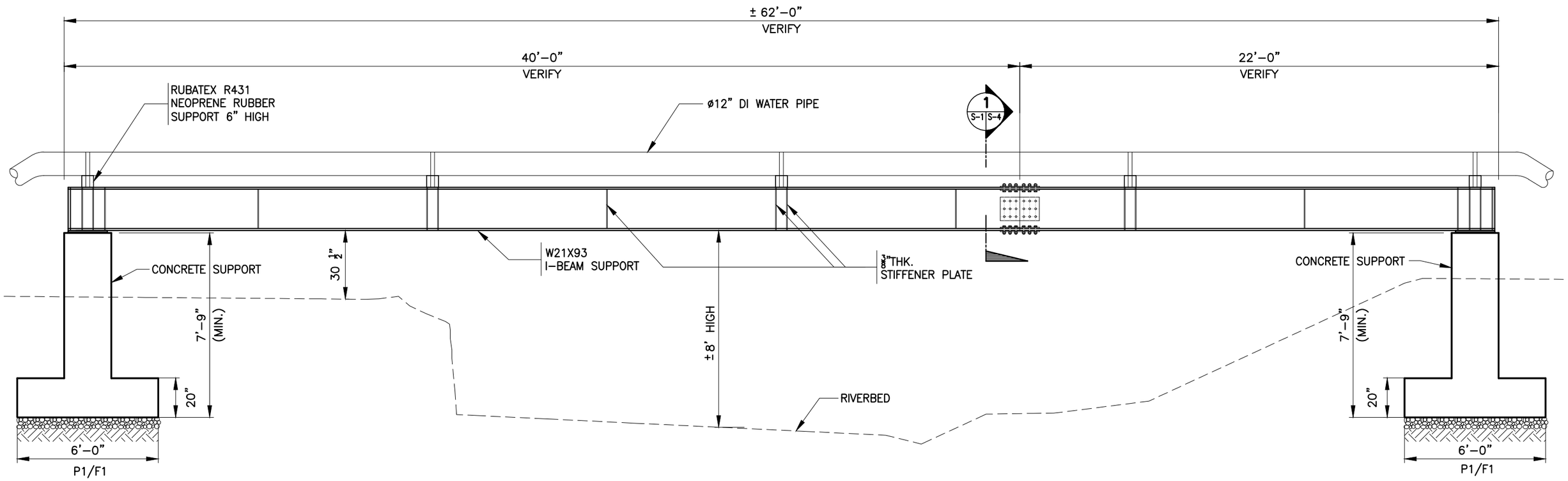

2 ELEVATION

S-1 S-1 SCALE NTS

REVISION	BY	CHECKED BY	APR.	DATE

PREPARED BY:

CHECKED BY:

APPROVED BY:

ISSUED BY:

AMERICAN SAMOA POWER AUTHORITY

ASPA WATER ENGINEERING DIVISION
TAFUNA, AMERICAN SAMOA
P.O.BOX PPB, PAGO PAGO AM SAMOA 96799.
TEL(684) 699-1333, FAX (684) 699-4035

PROJECT: ASBESTOS CEMENT PIPE REPLACEMENT AND WATER SYSTEM UPGRADE PROJECT – PAGO SITE

DRAWING TITLE: GENERAL PLAN & ELEVATION

PROJECT LOCATION: PAGO PAGO, TUTUILA ISLAND AMERICAN SAMOA

SCALE: NTS

PROJECT NO.

DATE: NOVEMBER 2023

SHEET NO. S–1

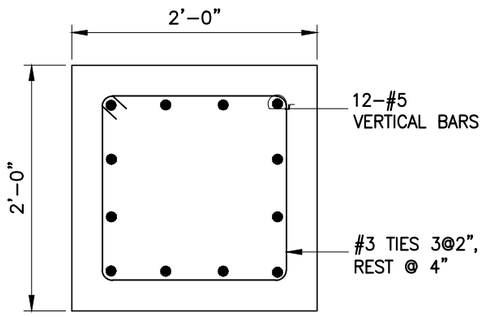

1 S-2 | S-2 P1 PEDESTAL DETAIL

SCALE NTS

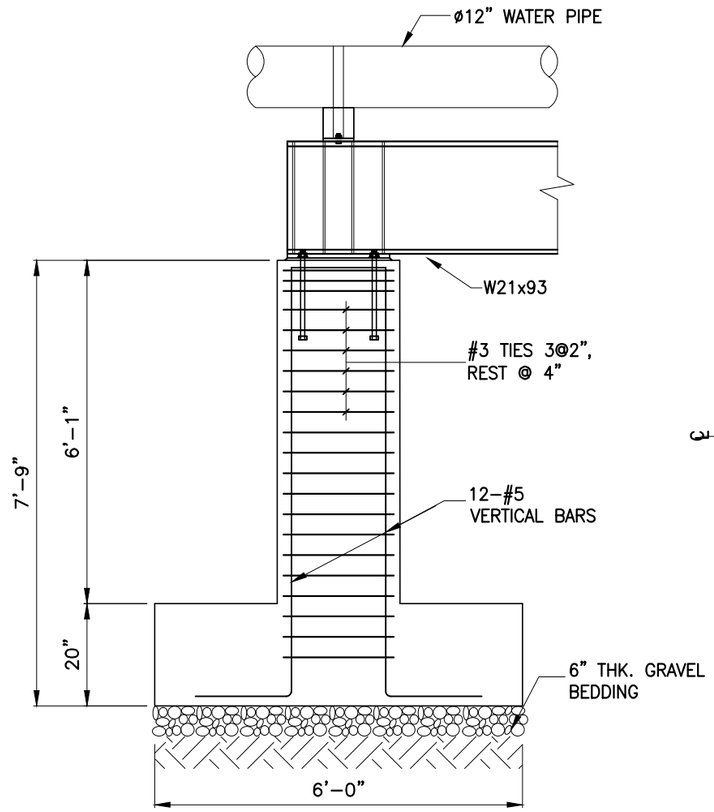

ELEVATION

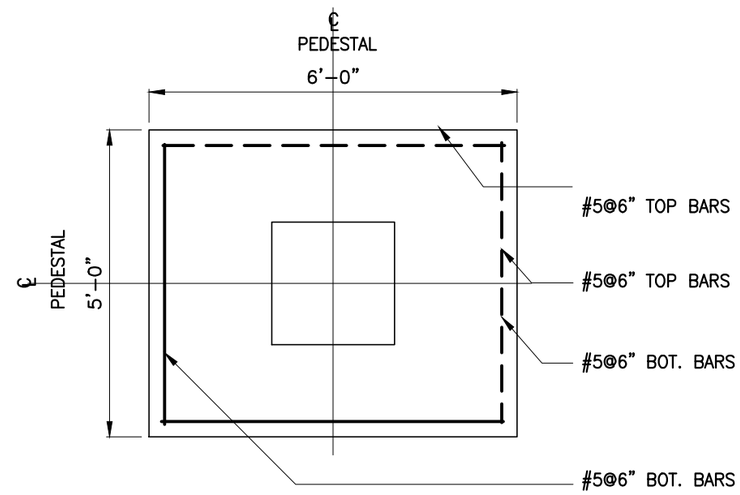

PLAN

2 S-2 | S-2 F1 FOOTING DETAIL

SCALE NTS

REVISION	BY	CHECKED BY	APR.	DATE

PREPARED BY:

CHECKED BY:

APPROVED BY:

ISSUED BY:

AMERICAN SAMOA POWER AUTHORITY

ASPA WATER ENGINEERING DIVISION
TAFUNA, AMERICAN SAMOA
P.O.BOX PPB, PAGO PAGO AM SAMOA 96799.
TEL(684) 699-1333, FAX (684) 699-4035

PROJECT: ASBESTOS CEMENT PIPE REPLACEMENT AND WATER SYSTEM UPGRADE PROJECT – PAGO SITE

DRAWING TITLE: TYPICAL SECTION AND DETAILS

PROJECT LOCATION: PAGO PAGO, TUTUILA ISLAND AMERICAN SAMOA

SCALE: NTS

PROJECT NO.

DATE: NOVEMBER 2023

SHEET NO. S-2

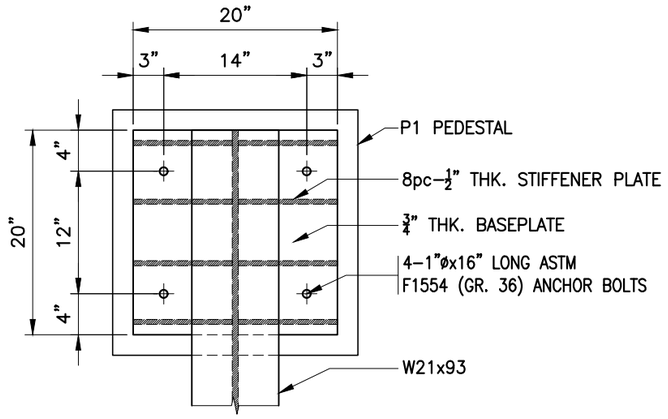

1A S-3 S-3 PLAN
SCALE NTS

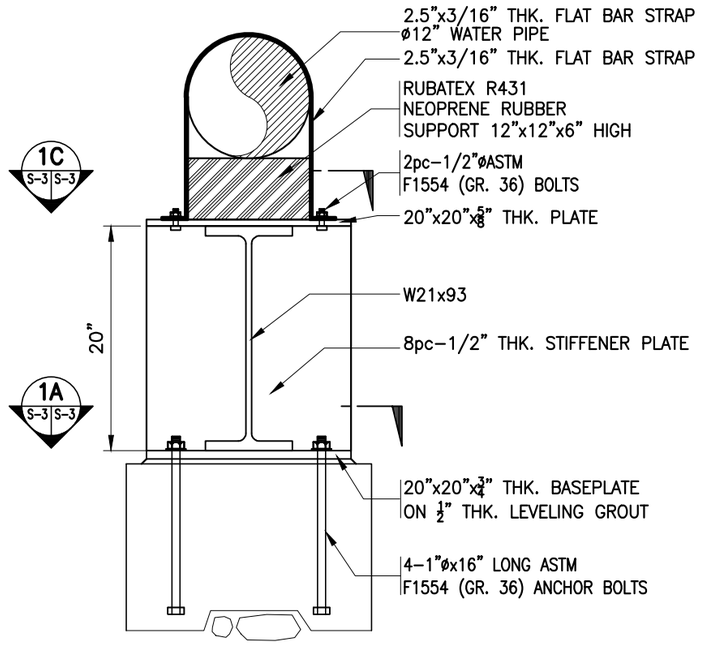

1B S-3 S-3 SECTION
SCALE NTS

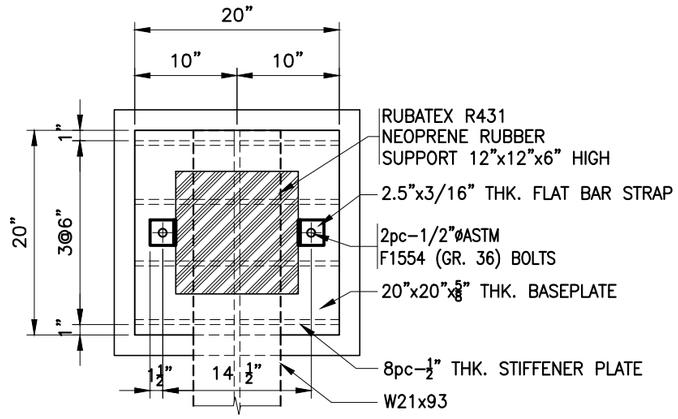

1C S-3 S-3 PLAN
SCALE NTS

1 S-3 S-3 STEEL BEAM TO CONCRETE PEDESTAL CONNECTION
SCALE NTS

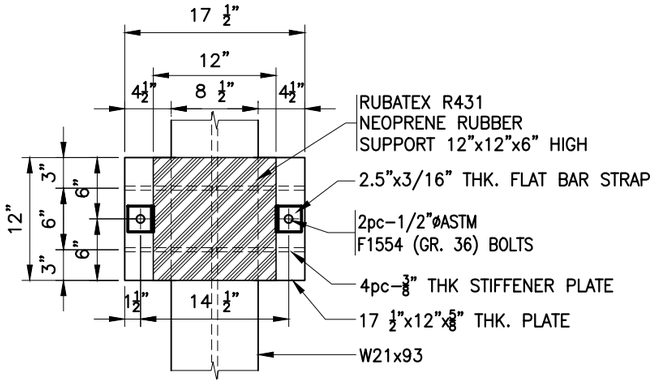

2A S-3 S-3 PLAN
SCALE NTS

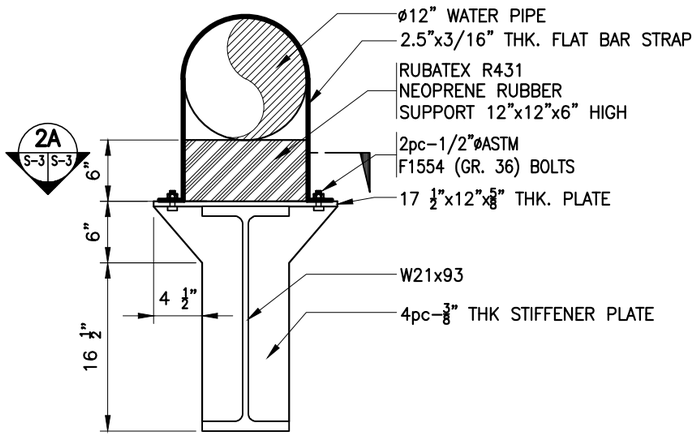

2B S-3 S-3 SECTION
SCALE NTS

2 S-3 S-3 PIPE CONNECTION TO STEEL GIRDER
SCALE NTS

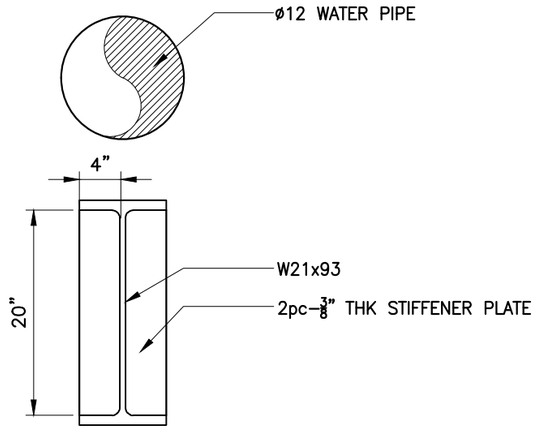

3 S-3 S-3 SECTION @ STIFFENER PLATE
SCALE NTS

REVISION	BY	CHECKED BY	APR.	DATE

PREPARED BY:
CHECKED BY:
APPROVED BY:
ISSUED BY:

AMERICAN SAMOA POWER AUTHORITY

ASPA WATER ENGINEERING DIVISION
TAFUNA, AMERICAN SAMOA
P.O.BOX PPB, PAGO PAGO AM SAMOA 96799.
TEL(684) 699-1333, FAX (684) 699-4035

PROJECT: ASBESTOS CEMENT PIPE REPLACEMENT AND WATER SYSTEM UPGRADE PROJECT – PAGO SITE

DRAWING TITLE: CONNECTION DETAILS

PROJECT LOCATION: PAGO PAGO, TUTUILA ISLAND AMERICAN SAMOA

SCALE: NTS

PROJECT NO.

DATE: NOVEMBER 2023

SHEET NO. S–3

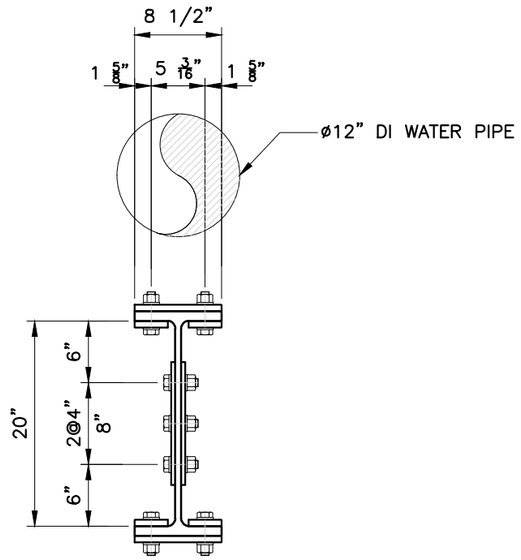

1 CROSS SECTION

S-1 | S-4

SCALE NTS

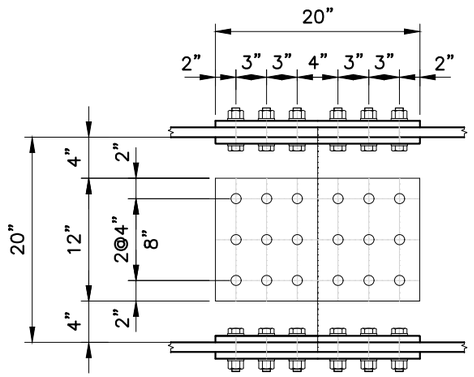

2–Spl Pl. 3/8" X 20 X 12 (A572 Gr.50)
18 – HTB M7/8" X 3 11/32" (A325)

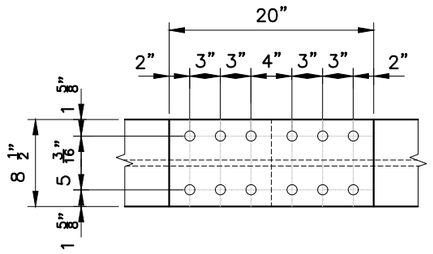

UPPER AND LOWER SPLICE PLATE

1–Spl Pl. 5/8" X 8 1/2" X 20" (A572 Gr.50)
2–Spl Pl. 5/8" X 3 5/32 X 20" (A572 Gr.50)
12 – HTB M7/8" X 4" (A325)

2 JOINT DETAIL

S-4

SCALE NTS

REVISION	BY	CHECKED BY	APR.	DATE

PREPARED BY:
CHECKED BY:
APPROVED BY:
ISSUED BY:

AMERICAN SAMOA POWER AUTHORITY

ASPA WATER ENGINEERING DIVISION
TAFUNA, AMERICAN SAMOA
P.O.BOX PPB, PAGO PAGO AM SAMOA 96799.
TEL(684) 699-1333, FAX (684) 699-4035

PROJECT: ASBESTOS CEMENT PIPE REPLACEMENT AND WATER SYSTEM UPGRADE PROJECT – PAGO SITE

DRAWING TITLE: W21x93 SPLICE DETAILS

PROJECT LOCATION: PAGO PAGO, TUTUILA ISLAND AMERICAN SAMOA

SCALE: NTS

PROJECT NO.

DATE: NOVEMBER 2023

SHEET NO. S–4