SCOPE OF WORK:

1. ERECT 10.2m WOODEN POLE AT LOCATIONS MARKED 1,2,3,4,5,6,6/1,6/2,7,8,9,10,11,12,13,13/1,14,15,16,17,18,18/1,18/2,18/3,18/4,18/5,18/6,18/7,20,20/1,20/1/1,20/2,20/3,20/4,20/5,21,22,23,24,25,26,26/1,27,29,32,33 & 34.
2. ERECT 11m WOODEN POLE AT LOCATIONS MARKED 19 AND 30,30/1 & 31,31/1 TO FORM H-POLE STRUCTURE.
3. ERECT 11m RC POLE AT LOCATIONS MARKED 14 & 28.
4. STRING 1ϕ HV HELIUM CONDUCTOR FROM POLE MARKED A TO 28 VIA POLES MARKED 1,B,2,3,4,5,6,7,8,9,10,11,12,13,14,15,16,17,18,19,20,21,22,23,24,25,26 & 27.
5. INSTALL 16kVA TRANSFORMER AT LOCATIONS MARKED 14 & 28.
6. STRING 1ϕ LV HELIUM CONDUCTOR FROM POLE 2 TO 34 VIA POLES 3,4,5,6,6/1,6/2,7,8,9,10,11,12,13,13/1,14,15,16,17,18,18/1,18/2,18/3,18/4,18/5,18/6,18/7,19,20,20/1,20/1/1,20/2,20/3,20/4,20/5,21,22,23,24,25,26,26/1,27,28,29,30,30/1,31,31/1,32 & 33.

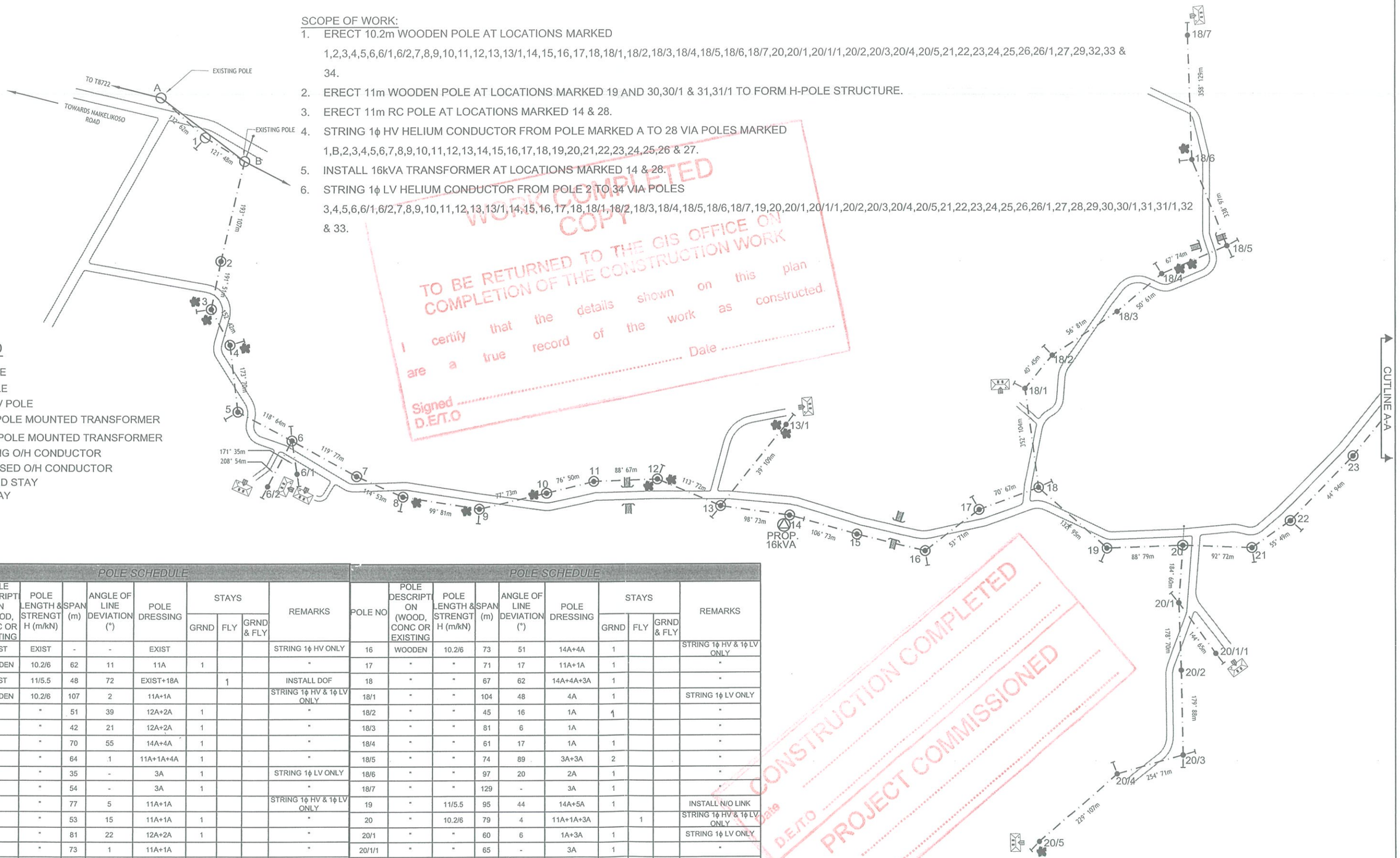

LEGEND

- LV POLE
- HV POLE
- HV & LV POLE
- PROP.POLE MOUNTED TRANSFORMER
- EXIST. POLE MOUNTED TRANSFORMER
- EXISTING O/H CONDUCTOR
- PROPOSED O/H CONDUCTOR
- GROUND STAY
- FLY STAY

WORK COMPLETED COPY
TO BE RETURNED TO THE GIS OFFICE ON COMPLETION OF THE CONSTRUCTION WORK
I certify that the details shown on this plan are a true record of the work as constructed.
Signed ..... Date .....
D.E/T.O

CONSTRUCTION COMPLETED
PROJECT COMMISSIONED
Date
D.E/T.O
Date
D.E/T.O

POLE SCHEDULE

POLE NO	POLE DESCRIPTION (WOOD, CONC OR EXISTING	POLE LENGTH & STRENGTH (m/kN)	SPAN (m)	ANGLE OF LINE DEVIATION (°)	POLE DRESSING	STAYS GRND	STAYS FLY	STAYS GRND & FLY	REMARKS
A	EXIST	EXIST	-	-	EXIST				STRING 1ϕ HV ONLY
1	WOODEN	10.2/6	62	11	11A	1			"
B	EXIST	11/5.5	48	72	EXIST+18A		1		INSTALL DOF
2	WOODEN	10.2/6	107	2	11A+1A				STRING 1ϕ HV & 1ϕ LV ONLY
3	"	"	51	39	12A+2A	1			"
4	"	"	42	21	12A+2A	1			"
5	"	"	70	55	14A+4A	1			"
6	"	"	64	1	11A+1A+4A	1			"
6/1	"	"	35	-	3A	1			STRING 1ϕ LV ONLY
6/2	"	"	54	-	3A	1			"
7	"	"	77	5	11A+1A				STRING 1ϕ HV & 1ϕ LV ONLY
8	"	"	53	15	11A+1A	1			"
9	"	"	81	22	12A+2A	1			"
10	"	"	73	1	11A+1A				"
11	"	"	50	12	11A+1A				"
12	"	"	67	25	12A+2A	1			"
13	"	"	72	15	11A+1A+3A	1			"
13/1	"	"	109	-	3A	1			STRING 1ϕ LV ONLY
14	CONC.	11/5.5	73	8	11A+1A+REM	1			INSTALL 16kVA TXF
15	WOODEN	10.2/6	73	2	11A+1A				STRING 1ϕ HV & 1ϕ LV ONLY

POLE SCHEDULE

POLE NO	POLE DESCRIPTION (WOOD, CONC OR EXISTING	POLE LENGTH & STRENGTH (m/kN)	SPAN (m)	ANGLE OF LINE DEVIATION (°)	POLE DRESSING	STAYS GRND	STAYS FLY	STAYS GRND & FLY	REMARKS
16	WOODEN	10.2/6	73	51	14A+4A	1			STRING 1ϕ HV & 1ϕ LV ONLY
17	"	"	71	17	11A+1A	1			"
18	"	"	67	62	14A+4A+3A	1			"
18/1	"	"	104	48	4A	1			STRING 1ϕ LV ONLY
18/2	"	"	45	16	1A	1			"
18/3	"	"	81	6	1A				"
18/4	"	"	61	17	1A	1			"
18/5	"	"	74	89	3A+3A	2			"
18/6	"	"	97	20	2A	1			"
18/7	"	"	129	-	3A	1			"
19	"	11/5.5	95	44	14A+5A	1			INSTALL N/O LINK
20	"	10.2/6	79	4	11A+1A+3A		1		STRING 1ϕ HV & 1ϕ LV ONLY
20/1	"	"	60	6	1A+3A	1			STRING 1ϕ LV ONLY
20/1/1	"	"	65	-	3A	1			"
20/2	"	"	70	1	1A				"
20/3	"	"	88	75	3A+3A	2			"
20/4	"	"	71	25	2A	1			"
20/5	"	"	107	-	3A	1			"
21	"	"	72	37	12A+2A	1			"
22	"	"	49	11	11A+1A	1			"
23	"	"	94	5	11A+1A				"

No.	REVISION	DATE	BY	CHK	PSD	APP
0	ORIGINAL ISSUE	19.03.18	SK			

REFERENCE

CAD FILENAME

DRAWING No.

TITLE

SHEET 1 OF 2

DRAWN	SHANE	19.03.18
CHECKED		22/03/18
CHIEF DRAUGHTSMAN	S.K	22/3/18
TEAM LEADER		22/3/18
ENGINEER		23/03/18
HEAD OF DEPARTMENT		22/3/18

FIJI ELECTRICITY AUTHORITY

SUPPLY TO JITENDRA DUTT & OTHERS
LABASA DISTRICT
KOROLAILAI AREA(LAB21-15)

DRAWING NUMBER: A1 | 04 | N92 | 278

SCALE 1:2000.

A1	04	N92	278

POLE SCHEDULE

POLE NO	POLE DESCRIPTION (WOOD, CONC OR EXISTING)	POLE LENGTH & STRENGTH (m/kN)	SPAN (m)	ANGLE OF LINE DEVIATION (°)	POLE DRESSING	STAYS			REMARKS
						GRND	FLY	GRND & FLY	
24	WOODEN	10.2/6	82	12	11A+1A		1		STRING 1ϕ HV & 1ϕ LV ONLY
25	"	"	78	37	12A+2A	1			"
26	"	"	90	61	14A+4A+3A		1		"
26/1	"	"	43	-	3A	1			STRING 1ϕ LV ONLY
27	"	"	27	13	11A+1A	1			"
28	CONC.	11/5.5	61	2	13A+1A+REM	1			INSTALL 16kVA TXF
29	WOODEN	10.2/6	95	8	1A	1			STRING 1ϕ LV ONLY
30	"	11/5.5	84	39	I4A	2			H-POLE STRUCTURE
30/1									
31	"	11/5.5	247	8	I4A	2			H-POLE STRUCTURE
31/1									
32	"	10.2/6	113	24	2A	1			STRING 1ϕ LV ONLY
33	"	"	109	56	4A	2			"
34	"	"	105	-	3A	1			"

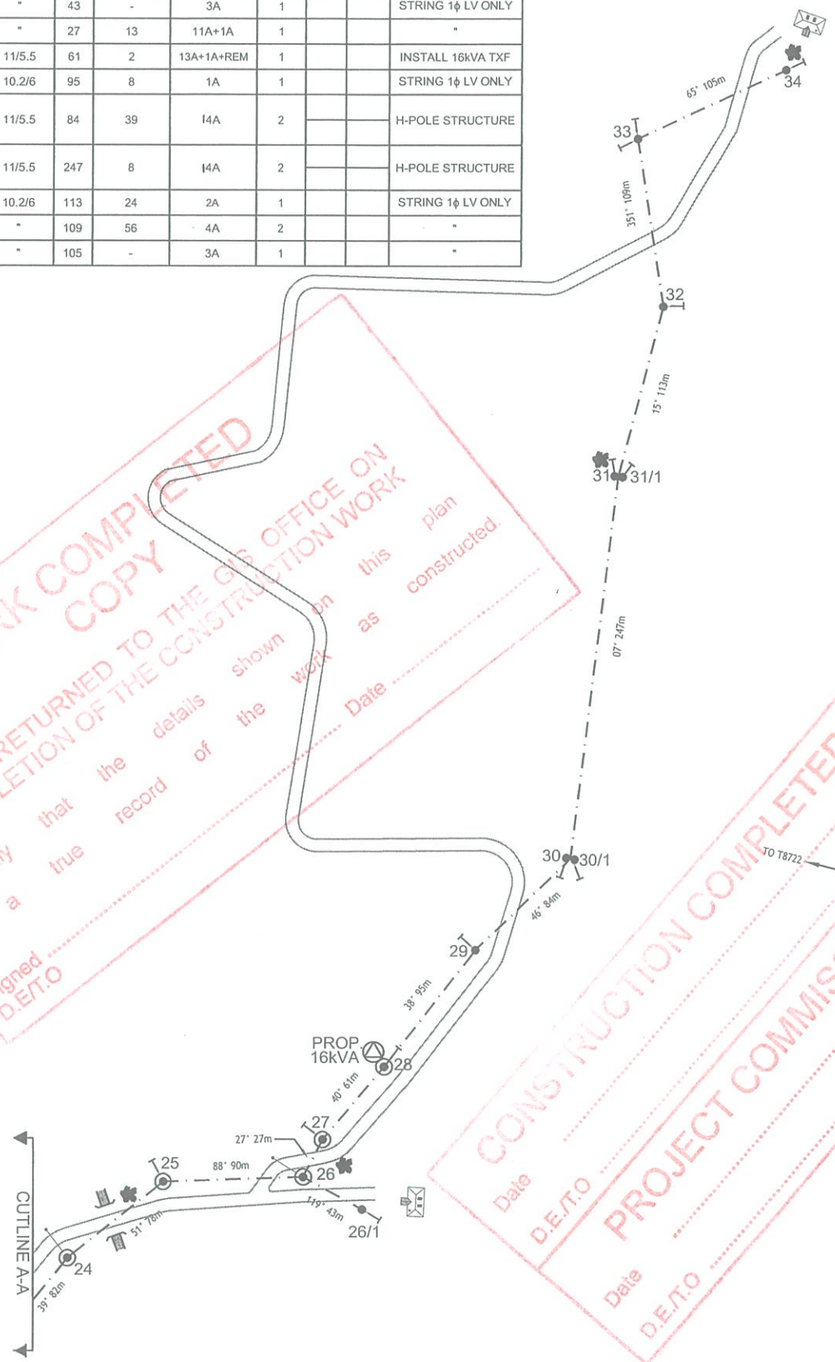

FINAL - LV CIRCUITS

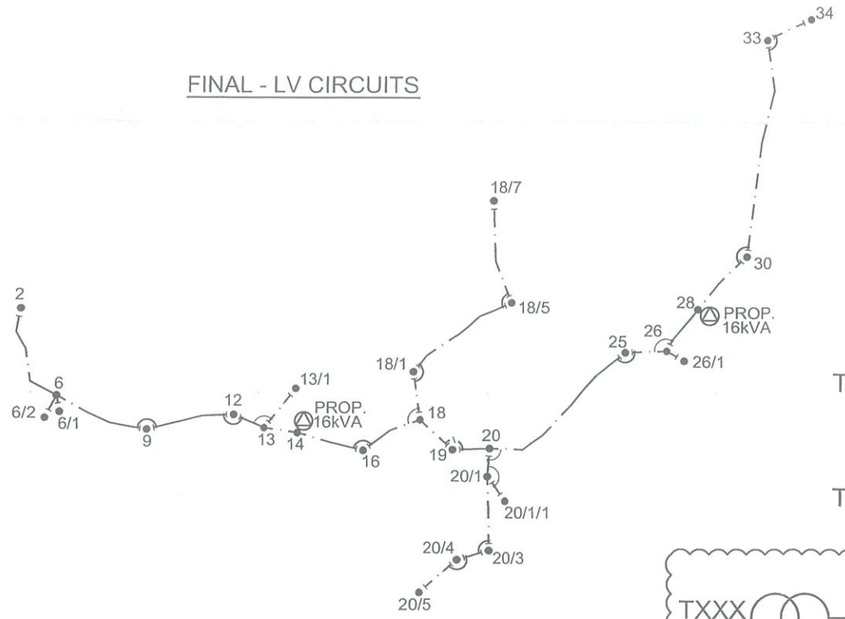

LEGEND - LV CIRCUIT

- PROP. TRANSFORMER
- LV POLES ONLY
- TERMINATION POINT
- BRIDGING POINT
- STRAIN POINT
- N/O LINK
- STRING 2 x 7/3.75AAAC HELIUM
  TOTAL ROUTE LENGTH = 3830m

FINAL - HV CIRCUIT

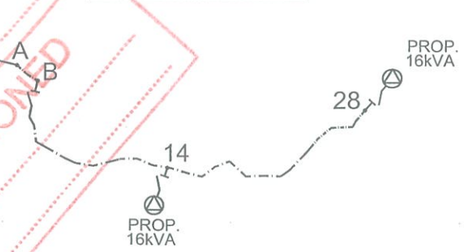

LEGEND - HV CIRCUIT

- HV POLE
- EXIST. POLE MOUNTED TRANSFORMER
- PROP.POLE MOUNTED TRANSFORMER
- DROP OUT FUSE/ABS
- EXISTING O/H CONDUCTOR
- STRING 2 x 7/3.75AAAC HELIUM CONDUCTOR.
  TOTAL ROUTE LENGTH = 2001m

SINGLE LINE DIAGRAM:
DRWG No. : 04 N30 013

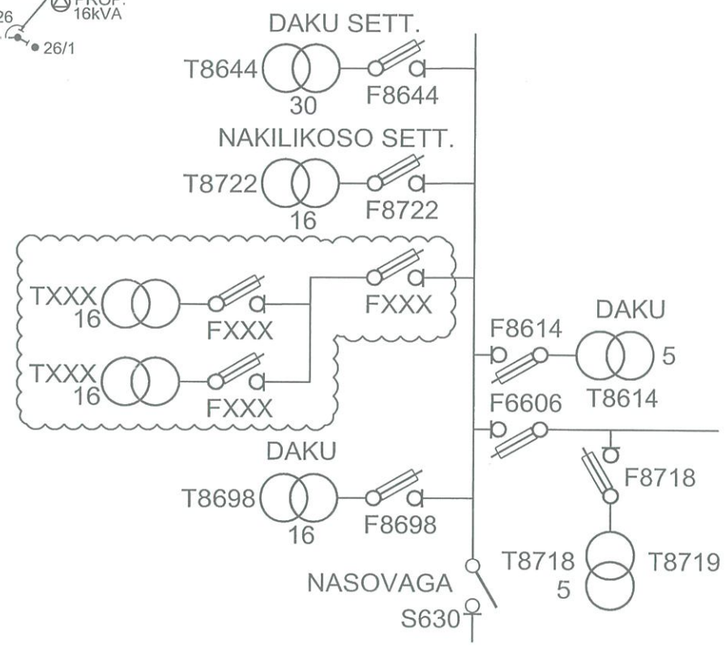

LOCALITY PLAN

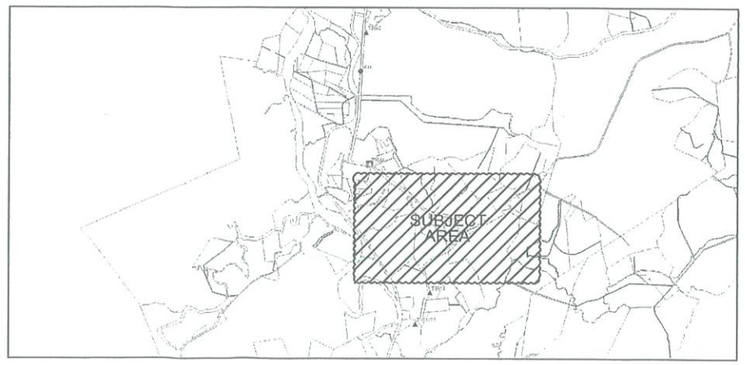

WORK COMPLETED COPY
TO BE RETURNED TO THE GIS OFFICE ON COMPLETION OF THE CONSTRUCTION WORK
I certify that the details shown on this plan are a true record of the work as constructed.
Signed ..... Date .....
D.E/T.O
CONSTRUCTION COMPLETED
Date .....
D.E/T.O .....
PROJECT COMMISSIONED
Date .....
D.E/T.O .....

No.	REVISION	DATE	BY	CHK	PSD	APP
0	ORIGINAL ISSUE	19.03.18	SK			

REFERENCE

CAD FILENAME

DRAWING No.

TITLE

SHEET 2 OF 2

DRAWN	SHANE	19.03.18
CHECKED		22/03/18
CHIEF DRAUGHTSMAN	SK	22/3/18
TEAM LEADER		22/3/18
ENGINEER		22/3/18
HEAD OF DEPARTMENT		22/3/18

FIJI ELECTRICITY AUTHORITY

SUPPLY TO JITENDRA DUTT & OTHERS
LABASA DISTRICT
KOROLAILAI AREA(LAB21-15)

DRAWING NUMBER: A1 04 N92 278

SCALE 1:2000.